eliwell

by Schneider Electric

EN

V800
/P1 /P2 / P3 /P4



Driver for electronic expansion valve

PRODUCT INFORMATION

⚠ ⚠ DANGER

HAZARD OF ELECTRIC SHOCK, EXPLOSION OR ARC FLASH

- Disconnect all power from all devices including connected devices, prior to removing any covers or doors, or installing or removing any accessories, hardware, cables, or wires.
- Always use a properly rated voltage sensing device to confirm the power is off where and when indicated.
- Replace and secure all covers, accessories, hardware, cables and wires and verify the earthing connections on all earthed devices.
- Use this equipment and all connected products only at the specified voltage.

Failure to follow these instructions will result in death or serious injury.

⚠ WARNING

UNINTENDED EQUIPMENT OPERATION

- Use appropriate safety interlocks where personnel and/or equipment hazards exist.
- Install and operate this equipment in an enclosure appropriately rated for its intended environment.
- Power line and output circuits must be wired and fused in compliance with local and national regulatory requirements for the rated current and voltage of the particular equipment.
- Do not use this equipment in safety-critical machine functions.
- Do not disassemble, repair, or modify this equipment.
- Do not connect wires to unused terminals and/or terminals indicated as “No Connection (N.C.)”.

Failure to follow these instructions can result in death, serious injury, or equipment damage.

FLAMMABLE REFRIGERANT GASES

This equipment is designed to operate in non-hazardous areas and where applications which generate - or could potentially generate - hazardous atmospheres have been isolated. Install this equipment only in areas and with applications known to be constantly free from hazardous atmospheres.

⚠ DANGER

HAZARD OF EXPLOSION

- Install and use this equipment in non-hazardous locations only.
- Do not install or use this equipment in applications which could generate hazardous atmospheres, such as those using flammable refrigerants.

Failure to follow these instructions will result in death or serious injury.

For information regarding the use of control equipment in applications capable of generating hazardous materials, please contact the regulatory office or the local, regional or national certification authority.

AVAILABLE MODELS, COMPONENTS & ACCESSORIES

Code	Model	Valve control	RS485	Notes
EVD2A43BSC000	V800/P1	Imax = 300mA at 230 Vac	Yes	AC Output • on-board RS485
EVD2A43BXC000	V800/P2	Imax = 300mA at 230 Vac	No	AC Output
EVD2A53BSC000	V800/P3	Imax = 300mA at 230 Vdc	Yes	DC Output • on-board RS485
EVD2A53BXC000	V800/P4	Imax = 300mA at 230 Vdc	No	DC Output

Code	Model	Description	Notes
ID34DR4SCDH00	ID985/V	Electronic controller for ventilated refrigeration units with V800 driver management via LAN serial connection	See 9MAX0017 manual
WK1400100N000	IWK/V	Remote terminal for parameter configuration, I/O display, alarms etc.	See 9IS60000 instructions See User Interface

Code	Model	Description	Notes
EVK2A43BXC010	-	Standard Kit	includes 1 x ID985/V 1 x V800/P2 **SN8P0X3002** 1 x NTC 'FAST' probe **TD420030B** 1 x ratiometric probe
EVK2A43BXC020	-	Starter Kit	includes 1 x ID985/V 1 x V800/P2 **SN8P0X3002** 1 x NTC 'FAST' probe **TD420030B** 1 x ratiometric probe **CCA0BUI02N000** 1 x USB Copy Card **DMP1000002000** 1 x Device Manager CD 1 x Device Manger interface
DMI100x002000	Device Manager Interface	USB/TTL hardware interface for use in conjunction with the Device Manager software	x=1: End User x= 2: Service x= 3: Manufacturer

COMPATIBLE VALVES LIST

Eliwell has electrical compatibility with following PULSE valves

Brand	Model	Brand	Model
Eliwell by Schneider Electric	PXV	**ALCO**	EX2
Danfoss	AKV10	**PARKER**	HP130
Danfoss	AKV15	**PARKER**	DS1120
Danfoss	AKV20	/	
Danfoss	AKV20		
Danfoss	AKVA (NH_3)		

Note : V800 Driver delivers to the valve the same voltage as its own supply voltage
Select carefully the suitable valve coil depending on the local power distribution network
For use with different valves please contact Eliwell Technical Customer Support

MECHANICAL ASSEMBLY

The device is designed for mounting on DIN guides.

The admissible ambient temperature range for correct operation is between –10 and 55 °C.

Also avoid fitting the device in places where there is high humidity and/or dirt; it is suitable for use in environments with an ordinary or normal level of pollution. Keep the area around the instrument cooling slots adequately ventilated.

Access to dip switches and connector for USB Copy Card / IWK/V

Remove the door (see figure below right) using a slotted screwdriver or the nail of your index finger.

Configure the dip switches and/or connect the USB Copy Card or connect IWK/V.

After having made the configurations, close the front panel of the keypad by pressing it with your fingers.

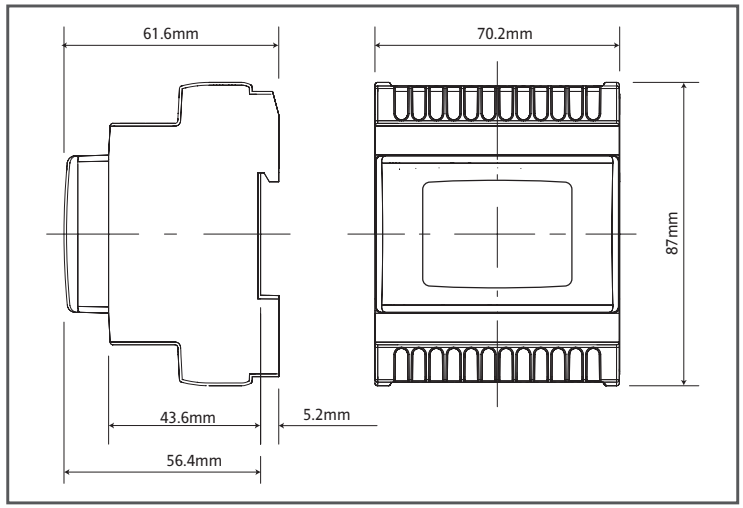

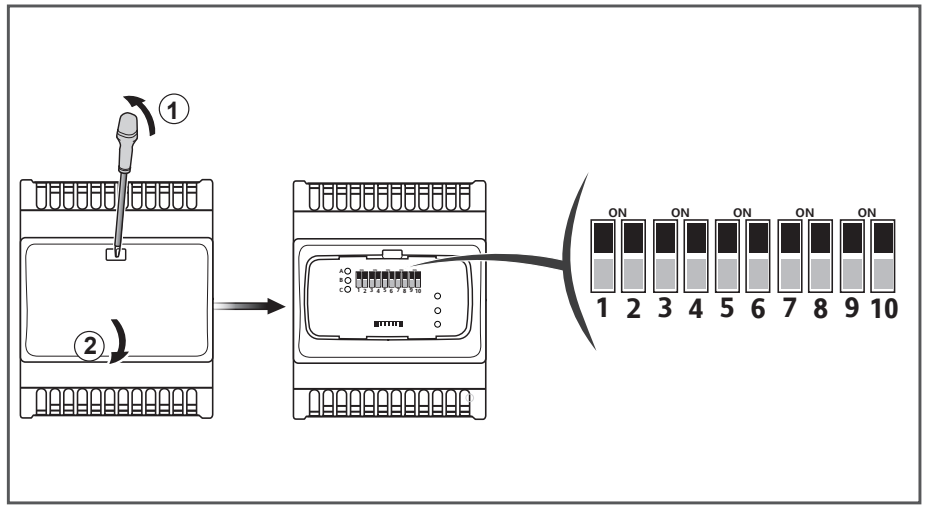

ELECTRICAL CONNECTIONS

Important! Make sure the machine is switched off before working on the electrical connections. The instrument is equipped with screw-on terminal boards for connection of electrical cables with a diameter of 2.5 mm^2 (one conductor only per terminal for power connections): for the capacity of the terminals, see the label on the instrument. The relay outputs are voltage free. Do not exceed the maximum permitted current; for higher loads, use a contactor with sufficient power capacity.

Make sure that power supply is of the correct voltage for the instrument. NTC probes have no connection polarity and can be extended using a normal bipolar cable (note that if the probes are extended this influences the device's electromagnetic compatibility - EMC: take great care with the wiring). Probe cables, power supply cables and serial cables should be routed separately from power cables. The pressure/ratiometric probe has a connection polarity which must be observed.

Wiring diagram description

Terminal	Label	Description	Notes	Par. / Notes
2-3-4	**RS485**	Televis/Modbus serial port	models /P1 /P3 only	models /P1 /P3 only
6-7-8	**DO1**	Relay output	(6= C; 7= NC; 8= NO)	H21
9-10	**Supply**	Power Supply 100...240V~	(9= L; 10= N)	-
11-12	**Valve Output**	Valve Output	(11= VO; 12= VO)	AC Valve Output models /P1 /P2 DC Valve Output models /P3 /P4

Terminal	Label	Description	Notes	Par. / Notes
14	**DI1**	Digital input 1	it is strictly prohibited to connect the Digital Input to a power source	H11, H30
15	**DI2**	Digital Input 2		H12, H30
16	**DO2**	Open Collector Output	-	H22
17	**GND**	Ground	-	-
18	**AO1**	Analogue Output	-	repeat in 0-10V scale VO valve output (terminals 11-12)
19	**AI1**	Analogue Input 1	overheating probe	H00 configurable NTC/4...20mA*
20	**5V⎓**	Probes Power Supply		**Power supply for ratiometric probe (terminal 21)
21	**AI2**	Analogue Input 2	saturation probe	H01 configurable NTC/4...20mA*/0-5V (ratiometric)**/ LAn (remote, shared pressure transducer)
22	**12V⎓**	Probes Power Supply	-	*Power supply for 4...20mA current input (terminals 19/ 21)
23-24	**LAN**	Powered serial port	ID985/V connection	-
DMI/CC		Serial port for connection to • USB Copy Card / • IWK/V	See DipSwitch	-
TTL		Serial port for connection to Televis / Modbus	-	PtS, dEA, FAA, PtY, Ptb

WIRING DIAGRAM

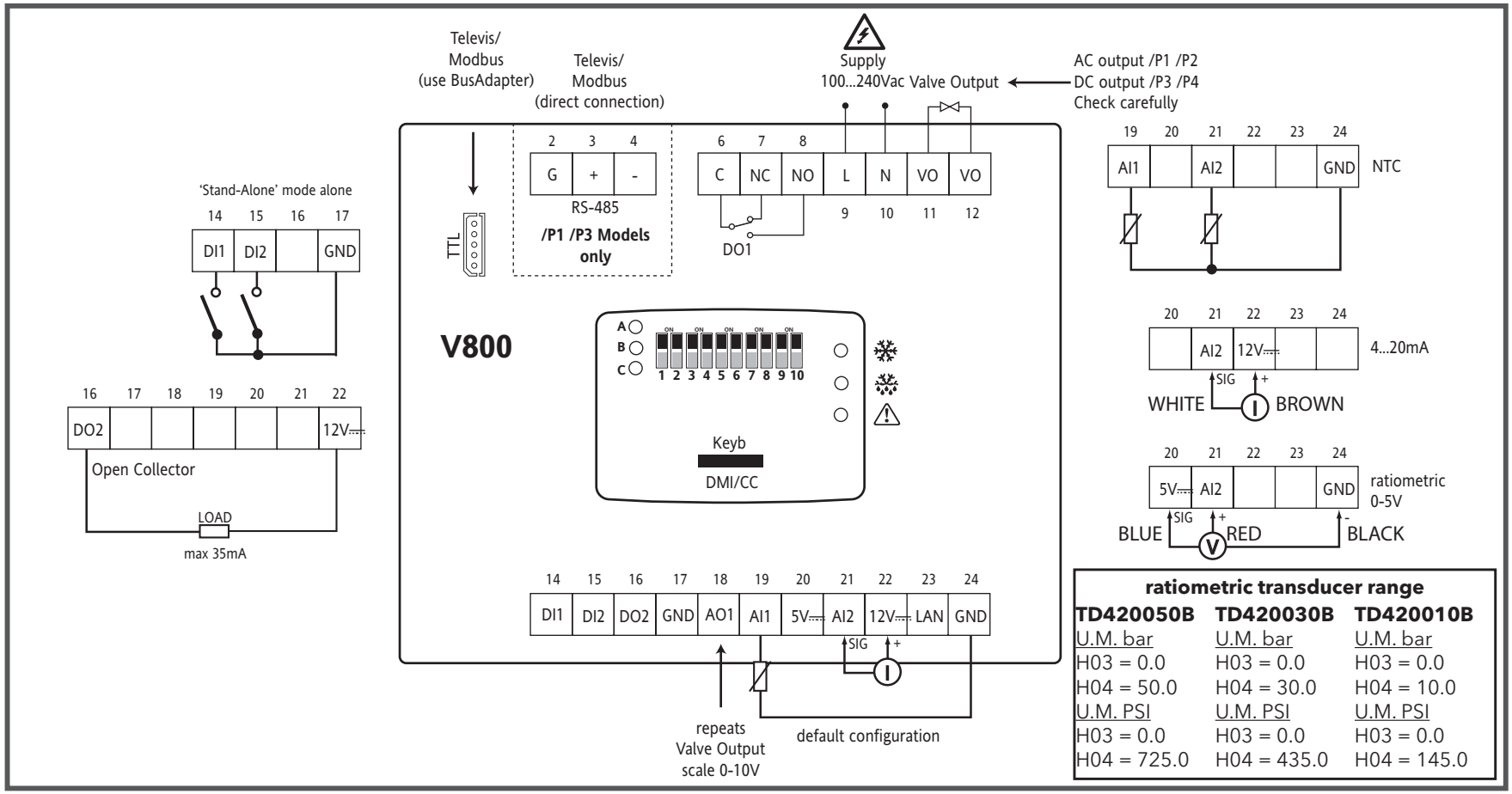

ratiometric transducer range

TD420050B	TD420030B	TD420010B
U.M. bar	U.M. bar	U.M. bar
H03 = 0.0	H03 = 0.0	H03 = 0.0
H04 = 50.0	H04 = 30.0	H04 = 10.0
U.M. PSI	U.M. PSI	U.M. PSI
H03 = 0.0	H03 = 0.0	H03 = 0.0
H04 = 725.0	H04 = 435.0	H04 = 145.0

CIRCUIT DIAGRAM - V800 with open door

USB Copy Card connection

• Display DipSwitch and use of DMI/CC connector for USB/Copy Card

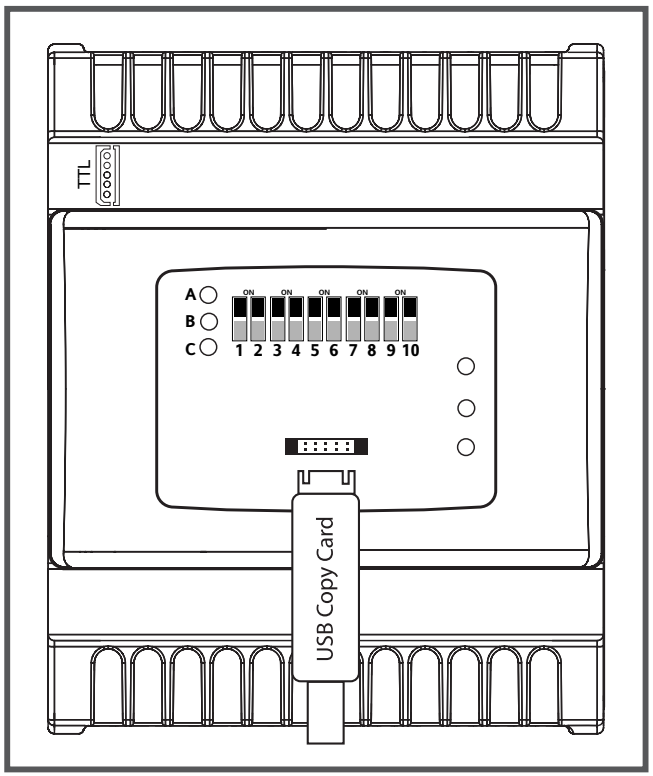

IWK/V / LAN connection

• Display DipSwitch and use of Keyb connector for IWK/V.
• Display LAN connection with ID985/V

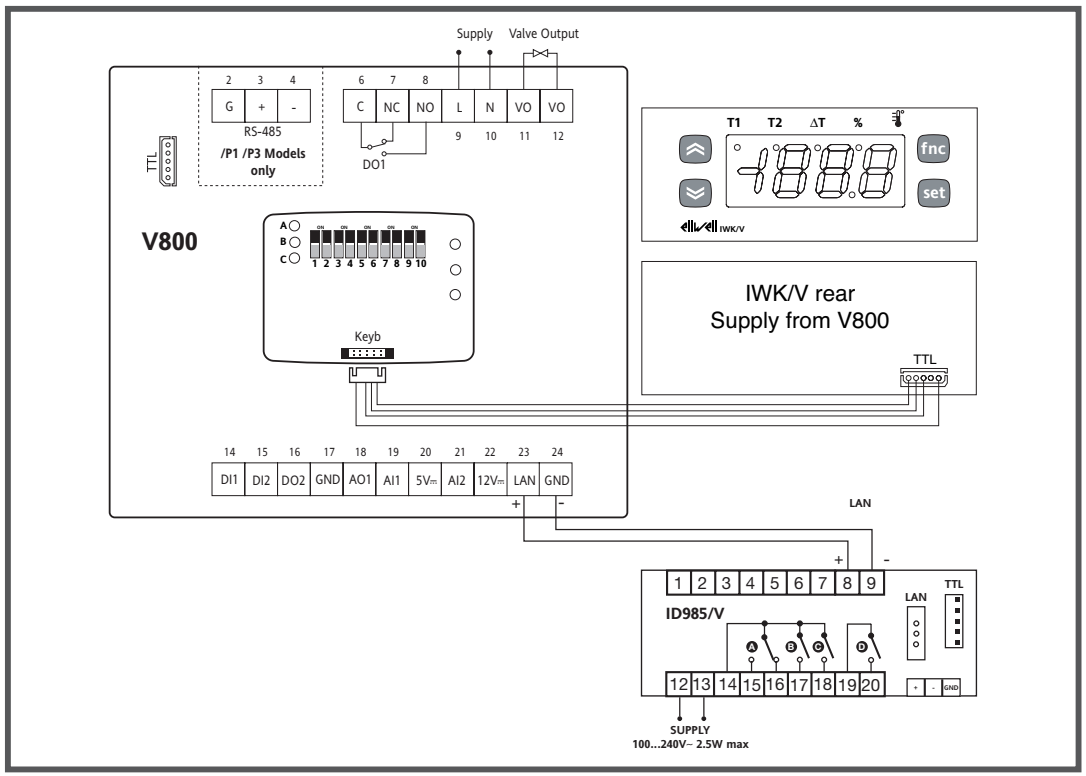

TECHNICAL DATA

The product also complies with the following harmonized standards: EN 60730-1 and EN 60730-2-9

Construction of control:	Electronic automatic Incorporated Control
Purpose of control:	Operating control (non-safety related) device
Type of action:	1.B
Pollution class:	2
Overvoltage category:	II
Rated pulse voltage:	2500 V
Power supply:	100...240 Vac (±10%) 50/60 Hz
Power draw (maximum):	3 VA coil consumption excluded.
Environmental operating conditions:	Temperature: -10...55 °C (23 ... 149 °F) Humidity: 10…90 %RH (non-condensing)
Transportation and storage conditions:	Temperature: -30...85 °C (-22...185 °F) Humidity: 10…90 %RH (non-condensing)
Software class:	A
Environmental front panel rating :	Open type

Loads:	**Label**	**Type**	**EU**
	DO1	Relay	NO 5 A - NC 2 A 250 Vac
	DO2	Open Collector	max current 35 mA. Load shall be supplied through 12V available on terminal 22

Analog output: 1 output 0-10V max. load 20 mA.

FURTHER INFORMATION

Input Characteristics

Measurement range:	-55...140 °C (-67...284 °F)
Accuracy:	better than 1 % of full-scale +1 digit.
Resolution:	1 or 0,1 °C/°F
Buzzer:	YES (depending on model)
Analog inputs:	• 1 NTC configurable input / 4...20mA • 1 NTC configurable input / 4...20mA / 0-5V / LAn (remote,shared pressure transducer)
Digital inputs:	2 configurable voltage-free inputs

Mechanical Characteristics

Terminals:	screw-on for cables with a diameter of 2.5 mm^2
Connectors:	• TTL (DMI/CC) for connection to USB Copy Card or IWK/V remote terminal. • TTL for Televis / Modbus connections **models /P1 /P3 only**: RS485 for direct connection to Televis / Modbus LAN: for connection to powered 3-wire interface. Max. distance 100 m

NOTE: The technical specifications stated in this document regarding the measurement (range, accuracy, resolution, etc.) refer strictly to the instrument and not to any accessories provided, such as the probes.

CONDITIONS OF USE - PERMITTED USE

For safety reasons, the device must be installed and used according to the instructions provided. In particular, parts carrying dangerous voltages must not be accessible in normal conditions.
The device must be adequately protected from water and dust with regard to the application, and must only be accessible using tools (with the exception of the front panel).
The device is suitable for use in household refrigeration appliances and/or similar equipment and has been tested for safety aspects in accordance with the harmonised European reference standards. It is rated:

- according to its construction, as an independently mounted automatic electronic control device;
- in terms of automatic operating characteristics, as a type 1B controller;
- in terms of software class and structure, as a Class A controller.

PROHIBITED USE Any use other than that expressly permitted is prohibited.
Note that the relay contacts provided are of a functional type and subject to failure: any protection devices required by product standards, or suggested by common sense for obvious safety requirements, must be installed externally to the instrument.

LIABILITY AND RESIDUAL RISKS

ELIWELL CONTROLS SRL declines any liability for damage due to:

- installation/uses other than those expressly specified and, in particular, failure to comply with the safety requirements of established standards and/or instructions specified in this document;
- use on panels that do not provide adequate protection against electric shocks, water or dust when assembled;
- use on panels allowing access to dangerous parts without having to use tools;
- tampering with and/or modification of the product;
- installation/use on panels which are not compliant with current standards and regulations.

USER INTERFACE

To operate on V800 use a IWK/V remote terminal connected to the TTL connector (DMI/CC) and supplied directly from V800.
Connect the cable supplied with the IWK/V to the connector housed inside the door on the front panel.

IWK/V Keys

<table>
<tr><th colspan="2">Key</th><th>Description</th><th colspan="2">Key</th><th>Description</th></tr>
<tr><td rowspan="2"></td><td rowspan="2">UP</td><td>Scrolls through menu items</td><td rowspan="2">fnc</td><td rowspan="2">fnc</td><td rowspan="2">Exits the menu (ESC)</td></tr>
<tr><td>Increases values</td></tr>
<tr><td rowspan="2"></td><td rowspan="2">UP</td><td rowspan="2">Displays values:
• %: valve opening percentage
• ΔT: overheating
• T2: saturation temperature
• T1: overheating temperature
LED ON when the corresponding value appears on the display</td><td rowspan="4">set</td><td rowspan="4">set</td><td rowspan="2">Displays alarms - if alarms active</td></tr>
<tr><td rowspan="3"></td><td rowspan="3">DOWN</td></tr>
<tr><td>Scrolls through menu items</td><td>Accesses menus</td></tr>
<tr><td>Decreases values</td><td>press for at least 5 secs.
Opens the programming menu</td></tr>
<tr><td>Displays values - See UP key</td><td>Confirms commands</td></tr>
</table>

LED Table

	LED	colour	ON	blinking		OFF	Notes
	EEV (PXV)	green	valve control	valve closed setpoint reached		/	EEV (PXV) LED OFF means no power supply
	Defrost	yellow	defrost ON (valve closed)	/	no serial connection	/	Defrost
	Alarm	red	NA	Alarm		/	Alarm

DipSwitch Table

	Dip1	2	3	4	5	6	7	8	9	10
Function	**Upload / Download parameters from Copy Card**									
Upload	**ON**	**OFF**								/
Download	**OFF**	**ON**								/
Protocol	**Protocol Selection**									
LAN			**OFF**							/
Televis*/Modbus ***Set Ptb parameter = 96 (96000 baud)**			**ON**							/

		Dip1	2	3	4	5	6	7	8	9	10
	Refrigerant	Refrigerant selection									
0	R404A				OFF	OFF	OFF				/
1	R22				ON	OFF	OFF				/
2	R410A				OFF	ON	OFF				/
3	R134A				ON	ON	OFF				/
4	R744 (CO_2)				OFF	OFF	ON				/
5	R507A				ON	OFF	ON				/
6	refrigerant customisable via USB Copy Card / Device Manager Default setting R717(NH_3)				OFF	ON	ON				/
7	set from parameter H10				ON	ON	ON				/
	Slave address	Network address selection									
1	1							OFF	OFF	OFF	/
2	2							ON	OFF	OFF	/
3	3							OFF	ON	OFF	/
4	4							ON	ON	OFF	/
5	5							OFF	OFF	ON	/
6	6							ON	OFF	ON	/
7	reserved DO NOT use							OFF	ON	ON	/
8	reserved DO NOT use							ON	ON	ON	/
Note: Dip10 is NOT used											

ACCESSING AND USING THE PROGRAMMING MENU

Parameters are organised into menus and viewed by keeping the ‘set’ key pressed for more than 5 seconds.
Upon access the first folder will be shown.

1. Scroll through the folders using “UP” and “DOWN” keys until you find the label for the desired folder
2. Press and release “set” key
3. Scroll through the parameters using “UP” and “DOWN” keys until you find the label for the parameter you want to change
4. Press and release “set” key
5. Set the desired value using “UP” and “DOWN” keys
6. To confirm the value press “set” key or let a timeout occur (15 seconds).

Note: Switch the device off and on again every time you change the parameter configuration.

ALARMS MENU

Active alarm

Press and release the ‘set’ key. If there is an active alarm condition, the ‘AL’ folder label will appear (see ‘Alarms’ section).

USB COPY CARD

The USB Copy Card is an accessory connected to the DMI/CC serial port and is used for quick programming of the device parameters (upload and download a parameter map to one or more devices of the same type). The operations are performed as follows:

- insert USB Copy Card in the suitable connector with device ON
- set DipSwitch 1 and 2, which are housed inside the door, as described in the following table
- wjen completed remove the USB Copy Card
- set DipSwitch to OFF position

Dip Switch USB Copy Card

Upload / Download parameters from USB Copy Card		
Function	**Dip1**	**2**
Upload	**ON**	**OFF**
Download	**OFF**	**ON**

UPLOAD: device --> USB Copy Card This operation uploads the programming parameters to the USB Copy Card.
NOTE: USB Copy Card will be formatted before use
DOWNLOAD: USB Copy Card --> device This operation downloads the programming parameters to the device.

USB Copy Card Dip Switch LED

LED		UPLOAD			DOWNLOAD		
	colour	in progress	completed correctly	failed	in progress	completed correctly	failed
A	green	blinking	ON	ON	/	/	/
B	green	/	/	/	blinking	ON	ON
C	yellow	/	/	blinking	/	/	blinking

NOTE:
• after the parameters have been downloaded, the device uses the downloaded parameter map settings.

SUPERVISION

The protocol can be modified without using the IWK/V remote terminal by positioning DipSwitch 3, which is housed inside the door, as described in the next page table:

LAN

The LAN function makes it possible to link up to 4 ID985/V devices connected to V800 in a network (see ID985/V manual, code 9MAX0017). The maximum distance between one device and the other must not exceed 7 metres, while the maximum distance between the first and the last device in the network must be approximately 50m.

Televis/Modbus

The connection to Televis**System** / Modbus RTU can take place:
• via TTL serial port. It is necessary to use the TTL/RS485 converter Bus**Adapter 130** or **150**
• **models /P1 /P3 only** directly via RS485 serial port.

(To configure the device for this purpose, open the folder identified by the ‘Add’ label and use parameters:
• PtS to select the Televis**System** / Modbus RTU protocol
    • Televis**System**: dEA and FAA.
    • Modbus RTU: dEA / FAA / PtY for the parity / Ptb for the baud rate.
NOTE: the connection serial port between the devices is powered.

Dip Switch Protocol Selection

Protocol Selection		LED C
Protocol	3	yellow
LAN	OFF	OFF
Televis/Modbus	ON	ON

LAN
DipSwitch3=OFF only for use with IWK/V
NOTE: TTL port shall NOT be connected to any device

Televis/Modbus
DipSwitch3=ON per Televis/Modbus supervision or use with DMI/CC
NOTA: IWK/V shall NOT be connected

ALARMS

Label*	Fault	Cause	Effects**	Remedy
Err	Probe AI1 or AI2 error	See E1/E2	**Display ΔT** • Display label Err / Icon ΔT permanently on --- • Recording of label Ex in folder AL x=1 or 2	See E1/E2
---	Probe AI1 or AI2 not configured	Probe AI1 or AI2 not configured		Configure probe. See H00/H01
E1 **(1E1/2E1)**	Overheating probe faulty AI1	• measured values are outside operating range • probe faulty/short-circuited/open	**Display T1** • Display label E1 / Icon T1 permanently on --- • Recording of label E1 in folder AL	• check probe type NTC/4..20mA (see H00) • check the probe wiring • replace probe

Label*	Fault	Cause	Effects**	Remedy
E2 (1E2/2E2)	Saturation probe faulty AI2	• measured values are outside operating range • probe faulty/short-circuited/open	**Display T2** • Display label E2 / Icon T2 permanently on - - - • Recording of label E2 in folder AL	• check probe type (see H01) • check the probe wiring • replace probe
HOt (1HP/2HP)	MOP Alarm		• Recording of label HOt in folder AL	
tHA (1HO/2HO)	Maximum Valve Opening Alarm	• maximum valve opening % >= U02 for a time longer than U05		
EA (1EA/2EA)	External alarm	• activation of digital input (configured as external alarm). See par. H11/H12	• Recording of label EA in folder AL	• if the alarm is silenced, the regulators remain blocked until the next deactivation of the digital input. • wait for deactivation of the digital input.

Label*	Fault	Cause	Effects**	Remedy
E7 (1E7/2E7)	LAN alarm between V800 and ID985/V	• Master/Slave communication failure.	• Recording of label E7 in folder AL	

* LABEL
• the first label indicates display via IWK/V (e.g. E1)
• the second label (in brackets) indicates display via ID985/V (e.g. 1E1). The number 1/2 indicates the connected V800 driver (max 2)

**EFFECTS
Refers to IWK/V remote terminal

NOTE E7
• Error E7 is signalled after around 20 seconds in the 'LAN error' condition, in order to prevent interference on the LAN network resulting in a communication failure.
• Error E7 is also signalled in the case of address conflicts when:
a) the Slave number set on the MASTER is different from the actual number of SLAVES in the network
b) 2 or more Slaves have the same address.
LAN alarms and address conflicts are displayed alternately with the temperature value or probe error normally displayed both on the Master and on the Slaves.

FUNCTIONING

V800 is an electronic expansion PULSE valve controller. It controls the minimum overheating vale read on evaporator output.
The regulation value is the percentage of valve opening which is commutated in the percentage of VO output opening depending on following parameters:

- U01 is the PWM period i.e. open/close valve sum time;
- U02 is the maximum valve opening %;
- U06 is the minimum valve useful opening %;
- U07 is the maximum valve useful opening %.

If the regulator drives an output greater or equal than U07, th real output will be U02.
If the regulator drives an output lower or equal than U06, the real output will be 0.

If the regulator drives a request greater or equal than U07, for a time greater than U05 a maximum opening alarm shows up to signal a critical plant condition.

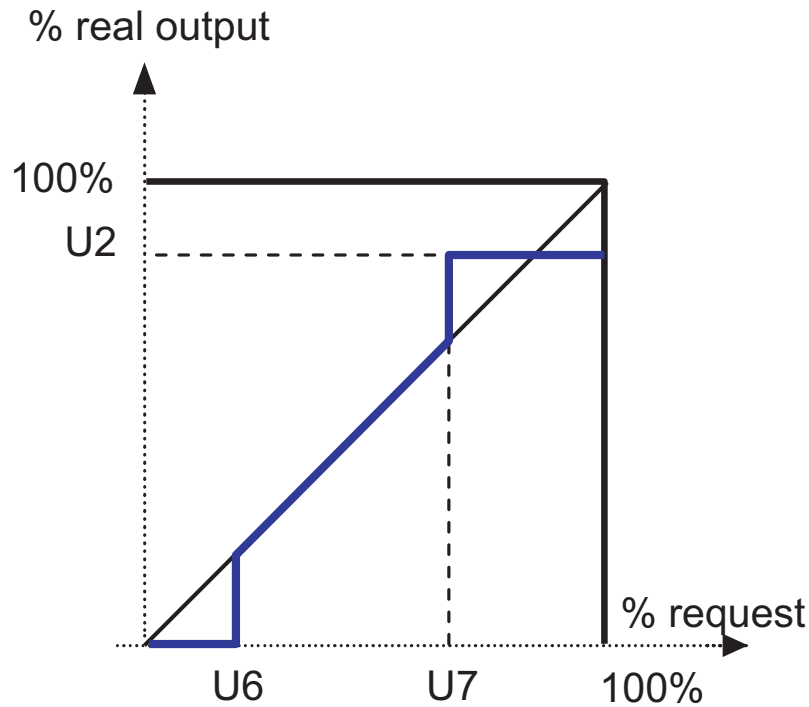

REGULATION

PID / H60

V800 calculates the real overheating by using the two analogue inputs overhaeting and saturaion probes.
Through a PID controller it modulates the valve opening to reach OLt setpoint The algorithm is dynamic: the effective overhaeting value could not reach setpoint or temporarirly decreases under setpoint value. Evaporator liquid leakage may occours: in this case increase Setpoint OLt to prevent it.
PID configuration parameters will be automatically uploaded by the device by selecting plant type defined by H60.

MOP (Maximum Operating Pressure)

MOP regulation defines a threshold set by pressure setpoint HOt. If the threshold has been exceeded for tAP period, an MOP alarm will show up.
MOP regulation can be disabled:

- via HOE parameter
- at power -on / after defrost for an HdP period

APPLICATIONS

Stand-Alone

• The driver (EEV Driver V800) controls the electronic expansion valve
• The V800 driver receives the commands for defrosting and control of the EEV (PXV) from digital inputs (see par. H11/H12)
Note: set H30=di (Digital input)

Typical application

See diagram opposite.
• The driver (EEV Driver V800) controls the electronic expansion valve EEV (PXV)
• The V800 driver receives the commands for defrosting and control of the EEV (PXV) from ID985/V via LAN Eliwell.*
If there is no communication, V800 closes the EEV (PXV) valve and signals the alarm.
• ID985/V controls the refrigerated cabinet (ducted showcase)

*Note : if the digital input DI1 and DI2 are configurated, i.e. H11 and/or H12 ≠ 0 (not enabled), then they will have priority on the commands received from Eliwell LAN.

Typical application

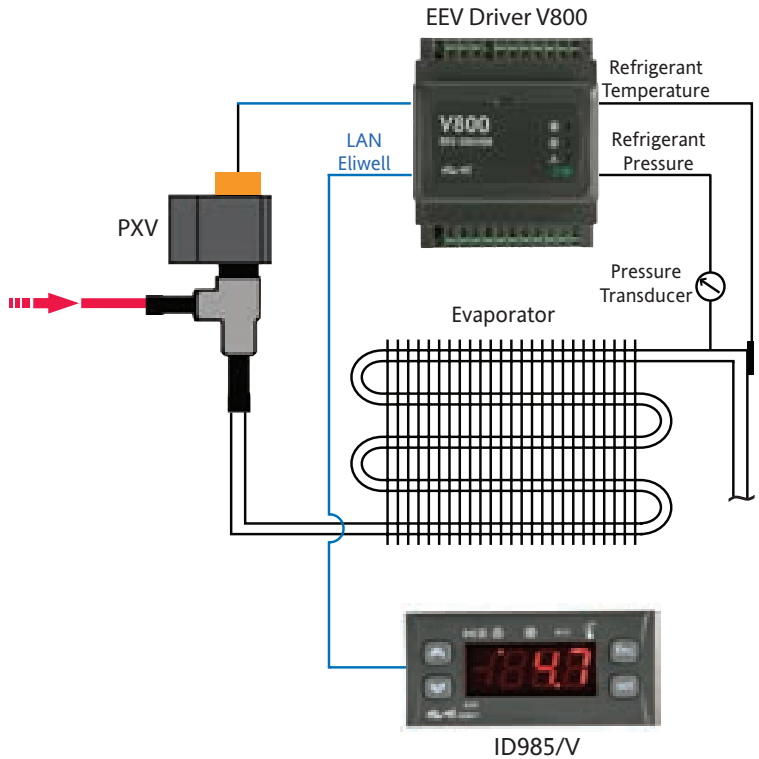

Application with multiple V800 drivers / ID985/V controllers

The network manages a maximum of 4 V800 drivers + 4 ID985/V controllers
Each V800 driver is controlled by the corresponding ID985/V controller via LAN Eliwell.
• Driver 1 (EEV Driver V800 1) controls electronic expansion valve 1 (PXV1)
...
• Driver 4 (EEV Driver V800 4) controls electronic expansion valve 4 (PXV4)
• The drivers receive the commands for defrosting and control of the corresponding EEVs (PXV) from the corresponding ID985/V controllers via LAN Eliwell.* see note at page 25
•The network address is configured:
• via Dip Switch for each V800;
• via keyboard for each ID985/V.
If there is no communication, V800 closes the EEV (PXV) valve and signals the alarm.

NOTE

The configurations with at least 2 ID985/V makes it possible to use a single shared pressure transducer. The V800 driver to which it is physically connected must have network address 1 (see Dipswitch / LAn). All others must have a network address different from 1 and it is essential to set parameter H01=LAn (remote).

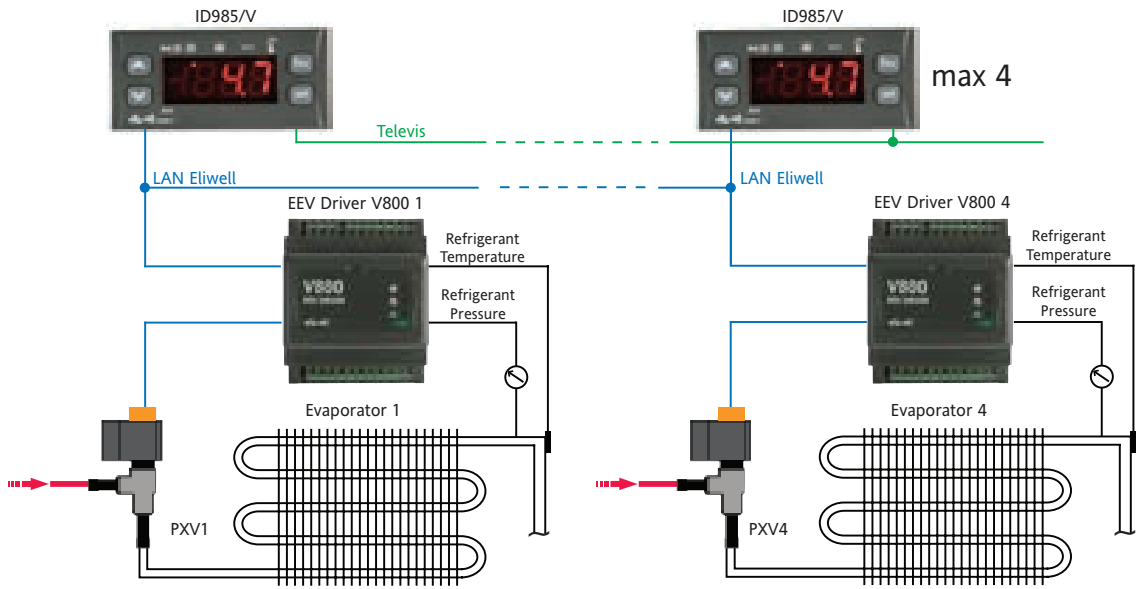

Application with 2 V800 drivers - 1 ID985/V controller

The network manages a maximum of (2 drivers V800 + 1 ID985/V) x 3:

• Driver 1 (EEV Driver V800 1) controls electronic expansion valve 1 (PXV1)

• Driver 2 (EEV Driver V800 1) controls electronic expansion valve 2 (PXV2): set on ID985/V second evaporator (H43=2EP / H21...H24=9, see 9MAX0017 user manual)

• Drivers 1&2 receive the commands for defrosting and control of the corresponding EEVs (PXV) from the ID985/V controller via LAN Eliwell.* see note at page 26

• The network address is configured:

• via Dip Switch for V800;

• via keyboard for ID985/V.

If there is no communication, V800 closes the EEV (PXV) valve and signals the alarm.

• ID985/V controls the refrigerated cabinet (ducted showcase) and manages the defrosting of the two sections

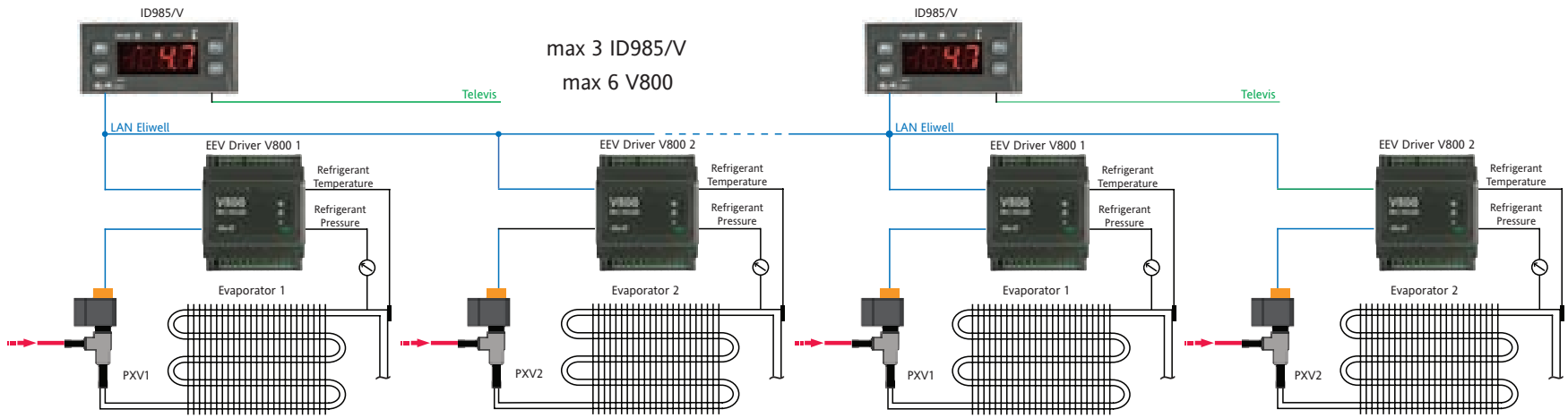

PARAMETER TABLE

FOLD	PAR.	DESCRIPTION	RANGE	DEF.	U.o.M.	VAL
At1		**PULSE OUTPUT**				
At1	U01	PWM period.	3...10	6	sec	
At1	U02	maximum valve opening %.	0...100	100	number	
At1	U03	valve actuation % after blackout for time set by OtF. NOTE. Calculated automatically but modifiable for first startup.	0...100	0	number	
At1	U04	valve actuation % after defrost for time set by OtF. NOTE. Calculated automatically but modifiable for first startup. If %=0 is defined by U03	0...100	0	number	
At1	U05	Valve operating time at maximum opening for alarm signal. If the valve is at maximum opening (see U02) for a time longer than U05, the alarm is activated	0...255	60	min	
At1	U06	minimum valve useful opening %.	0...100	0	number	
At1	U07	maximum valve useful opening %.	0...100	100	number	
CnF		**CONFIGURATION**				
CnF	H00	Overheating probe configuration. diS = disabled; ntC= NTC; 420= 4...20mA	diS/ntC/420	ntC	number	
CnF	H01	Saturation probe configuration. diS = disabled; ntC= NTC; 420= 4...20mA; rA=ratiometric transducer; LAn = remote (shared pressure transducer). See Application with multiple V800 drivers / ID985/V controllers.	diS/ntc/420/ rA/LAn	420	number	
CnF	H03	Lower current/voltage limit for input.	-14.5...1000.0	-0.5	bar/PSI	
CnF	H04	Upper current/voltage limit for input.	-14.5...1000.0	7.0	bar/PSI	

FOLD	PAR.	DESCRIPTION	RANGE	DEF.	U.o.M.	VAL
CnF	H05	Pressure measurement unit.	PSi/bAr	bAr	flag	
CnF	H06	Temperature measurement unit.	C/F	C	flag	
CnF	H10	Select refrigerant. To use only if DipSwitch Refrigerant selection = 7. If not H10 will be ignored. 404=R404A; R22=R22; 410=R410a; 134=R134a; 744=R744 (C02); 507=R507a; PAr=R717(NH_3) is the default setting but refrigerant can be personalised via USB Copy Card or software Device Manager. 717=R717; 290=R290; 407=R407a; 448=R448a; 449=R449a; 450=R450a; 513=R513A;	404/.../PAr 717/.../513	404	number	
CnF	H11	Configurability and polarity of digital input DI1. 0= disabled; ±1 = ON/OFF driver; ±2 = Defrosting; ±3 = Alarm. The '+' sign indicates that the input is active with closed contact. The '-' sign indicates that the input is active with open contact.	-3...3	0	number	
CnF	H12	Configurability and polarity of digital input DI2. Same as H11.	-3...3	0	number	
CnF	H15	Valve opening % during probe error.	0...100	0	number	
CnF	H21	Configurability of digital output DO1. diS = disabled; SOL = solenoid valve; AL = Alarm.	dIS/ SOL/AL	SOL	number	
CnF	H22	Configurability of Open Collector output DO2. Same as H21.	dIS/ SOL/AL	diS	number	
CnF	H30	Command from digital input or serial port. di= Digital Input (Stand-Alone mode only); LAn = Eliwell LAn*; rEt= remote (Softgate/Modbus)* *Note : If H11 and or H12 ≠0, digital input DI1 and DI2 will have priority on the commands received from LAN/Televis Serial	di/LAN/rEt	LAn	number	

FOLD	PAR.	DESCRIPTION	RANGE	DEF.	U.o.M.	VAL
CnF	H60	Plant Type. 0, 5...16 = NOT USED. 1 = ducted showcases and quick variation evaporator pressure (e.g. step control); 2 = ducted showcases and controlled/gradual evaporator pressure (e.g. INVERTER control); 3 = showcases with compressor on board; 4 = showcases with compressor on board and renewing exchanger.	0...16	1	number	
Add		**COMMUNICATION**				
Add	PtS	Protocol selection. t= Televis; d=Modbus.	t/d	t	flag	
Add	dEA	Index of the device within the family (valid values from 0 to 14).	0...14	0	number	
Add	FAA	Device family (valid values from 0 to 14). The pair of values FAA and dEA are the network address of the device and are given in the format 'FF.DD' (where FF=FAA and DD=dEA).	0...14	0	number	
Add	PtY	Modbus parity bit. n= none; E=Even; o=odd	n/E/o	E	number	
Add	Ptb	Baud rate. 12=1200 baud; 24=2400 baud; 48=4800 baud; 96=9600 baud; 192=19200 baud; 38400=384 baud. If PtS= t (Televis) set Ptb to 96= 9600 baud.	12/.../384	96	number	
OP		**MAXIMUM OPERATING PRESSURE (MOP)**				
OP	HOE	Enable MOP. n= MOP disabled; y = MOP enabled.	n/y	n	flag	
OP	HdP	MOP disable time. MOP activation delay on startup or on reset after a defrosting cycle.	0...999	0	sec	
OP	HOt	Evaporator temperature upper threshold.	-60.0...100.0	0.0	°C/°F	

FOLD	PAR.	DESCRIPTION	RANGE	DEF.	U.o.M.	VAL
OP	tAP	Minimum time that temperature upper threshold is exceeded for alarm activation. If the HOt threshold is exceed for a time longer than tAP the MOP alarm is activated.	0...255	180	sec	
OH		**OVERHEATING**				
OH	OLt	Overheating lower threshold.	0.0...100.0	8.0	°C/°F	
OH	OtF	Valve opening freezing timer.	0...1999	0	sec	
diS		**DISPLAY**				
diS	PA1	PAssword 1. When enabled (value other than 0), this is the access key to the User parameters (USr).	0...1999	0	number	
diS	ndt	number display type. Display with decimal point. n = no (integers only); y = yes (display with decimal point).	n/y	Y	flag	
diS	CA1	Calibration 1. Saturation probe calibration. Positive or negative temperature value added to the value read from the overheating probe.	-12.0...12.0	0	°C/°F	
diS	CA2	CAlibration 2. Overheating probe calibration. Positive or negative temperature value added to the value read from the saturation probe.	-12.0...12.0	0	°C/°F	
CnF	rEL	Firmware rELease. Device version. Reserved: read-only parameter.	/	/	/	
CnF	tAb	tAble of parameters. Reserved: read-only parameter.	/	/	/	
The following folders and corresponding parameters are visible from the ID985/V Configuration menu and not from the IWK/V remote terminal. EE0 refers to driver 1, EE1 to driver 2						
EE0/EE1	FSS	Device screen. Read-only parameter.	/	/	number	

FOLD	PAR.	DESCRIPTION	RANGE	DEF.	U.o.M.	VAL
EE0/EE1	rEL	Device version. Read-only parameter.	/	/	number	
EE0/EE1	PEr	Valve opening %. Read-only parameter.				
EE0/EE1	PSH	Overheating probe value. Read-only parameter.				
EE0/EE1	PSA	Saturation probe value. Read-only parameter.				
EE0/EE1	SHt	Overheating temperature. Read-only parameter.				
EE0/EE1	Adr	Enable valve driver. Indicates the address of the controlled valve. 0 = disabled.	0...6	1 (EE0) 0 (EE1)*	number	

FOLD = FOLDER (e.g. DEF folder includes the DEFrost parameters); PAR. = PARAMETER;

DEF. = DEFAULT; VAL= VALUE: to be entered manually, if necessary with the user's personalised settings (if different from the default settings).

* value <>0 for **Application with 2 V800 drivers - 1 ID985/V controller** (see relevant paragraph)

DISCLAIMER

This document is the exclusive property of Eliwell Controls S.r.L. and cannot be reproduced and circulated unless expressly authorized by Eliwell Controls S.r.L.. Although Eliwell Controls S.r.L. has taken all possible measures to guarantee the accuracy of this document, it declines any responsibility for any damage arising out of its use.
The same applies to any person or company involved in preparing and writing this manual. Eliwell Controls S.r.L. reserves the right to make any changes or improvements without prior notice and at any time.

by Schneider Electric

Eliwell Controls s.r.l.
Via dell'Industria, 15 - Z.I. Paludi
32016 Alpago (BL) ITALY
T: +39 0437 986 111
F: +39 0437 989 066
www.eliwell.com

Technical Customer Support:
T: +39 0437 986 300
E: Techsuppeliwell@se.com

Sales:
T: +39 0437 986 100 (Italy)
T: +39 0437 986 200 (other countries)
E: saleseliwell@se.com
MADE IN ITALY

cod. 9MA10016 • EN • rel. 01/23
© 2023 Eliwell. All rights reserved.