IDNext -HC - Eliwell APP

Scan the QR code using the myEliwell APP to access the user manual.

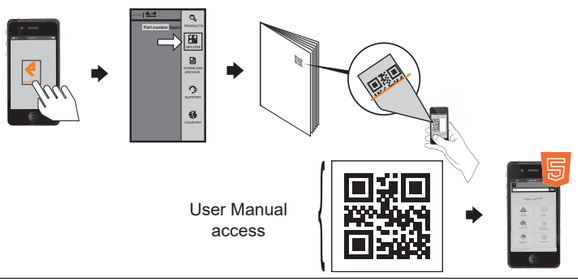

Download the myEliwell APP from: Google play / App Store

ELECTRICAL CONNECTIONS

⚠⚠ DANGER

HAZARD OF ELECTRIC SHOCK, EXPLOSION, FIRE OR ARC FLASH

- Disconnect all power from all equipment including connected devices prior to removing any covers or doors, or installing or removing any accessories, hardware, cables or wires.
- Always use a properly rated voltage sensing device to confirm the power is off where and when indicated.
- Before restoring the power supply, replace and secure all covers, hardware components and cables.
- Use only the specified voltage when operating this device and any associated products.
- Use appropriate safety interlocks where personnel and/or equipment hazards exist.
- Install and use this equipment in an enclosure appropriately rated for its intended environment.
- Do not use this equipment for safety-critical functions.
- Do not disassemble, repair, or modify this equipment.

Failure to follow these instructions will result in death or serious injury.

⚠⚠ DANGER

HAZARD OF ELECTRIC SHOCK AND/OR FIRE

- Do not expose the equipment to liquids.
- Do not exceed the temperature and humidity ranges specified in the technical data and keep the area surrounding the cooling slits aerated.
- Do not apply dangerous voltages to the SELV connection terminals (see 'Connections' section).
- Only connect compatible accessories, as specified in the user manual, to the device.
- Only use cables with a suitable cross-section (see 'Wiring guidelines' section).

Failure to follow these instructions will result in death or serious injury.

⚠ WARNING

HAZARD OF OVERHEATING AND/OR FIRE

- Do not use with loads other than those indicated in the technical data.
- Do not exceed the maximum permitted current; in the case of higher loads, use a contactor with suitable power.
- Verify that your application has not been designed with device outputs connected directly to devices generating a frequently activated capacitive load(1).
- Power lines and output connections must be suitably wired and protected by means of fuses when required by national and local regulations.
- Connect the relay outputs, including the shared pole, using cables with a cross-section of 2.5 mm² (14 AWG) and a length of at least 200 mm (7.87 in.).

Failure to follow these instructions can result in death, serious injury, or equipment damage.

(1) Even if the application does not apply a frequently activated capacitive load to the relay, capacitive loads reduce the life of any electromechanical relay and the installation of a contactor or external relay, sized and maintained according to the ratings and characteristics of the capacitive load, helps to minimize the consequences of relay degradation.

⚠ WARNING

UNINTENDED EQUIPMENT OPERATION DUE TO ELECTROSTATIC DISCHARGE

Before handling the equipment, always discharge the static electricity from the body by touching an earthed surface or type-approved antistatic mat.

Failure to follow these instructions can result in death, serious injury, or equipment damage.

FLAMMABLE REFRIGERANT GASES

The use of flammable gas refrigerants is dependent on may factors, including local, regional and/or national regulations.

The devices and corresponding accessories described in the documentation accompanying the product use components and, more specifically, electromechanical relays tested in accordance with IEC standard 60079-15 and classed as nC components (non-sparking 'n' electrical apparatus). This condition complies to Annex BB of EN/IEC 60335-2-89.

Conformance to Annex BB EN/IEC 60335-2-89 is considered sufficient, and thereby suitable, for commercial refrigeration applications applying flammable gas refrigerants, such as R290. However, other limitations, equipment, locations and/or type of machine (refrigerators, vending machines and dispensers, bottle coolers, ice machines, Reach-Ins, etc.) may also be implicated, restricted and/or required in so doing.

The use and application of the information contained herein require expertise in the design and parameterizing/programming of refrigeration control systems. Only you - the original equipment manufacturer, installer or user - can be aware of all the conditions and factors present, and the regulations applicable, during the design, installation and setup, operation, and maintenance of the machine or related processes.

Therefore, only you can determine the suitability of automation and associated equipment, and the related safeties and interlocks, which can be effectively and properly used in the locations for which the equipment is to be put into service. When selecting automation and control equipment, and any other related equipment or software for an application, you must also consider any applicable local, regional or national standards and/or regulations.

You must verify, while incorporating this device and related equipment, the final compliance of the machine to regulations and standards when using flammable gas refrigerants. Although all statements and information contained herein are believed to be accurate and reliable, they are presented without warranty of any kind. Information provided herein does not relieve you from the responsibility of carrying out your own tests and validations of conformance to any applicable regulations.

⚠ WARNING

REGULATORY INCOMPATIBILITY

Make sure that all equipment used and systems designed comply with all applicable local, regional and national laws.

Failure to follow these instructions can result in death, serious injury, or equipment damage.

WIRING GUIDELINES

⚠⚠ DANGER

LOOSE WIRING CAUSES ELECTRIC SHOCK AND/OR FIRE

Tighten the connections in compliance with the technical specifications for torque values and make sure the wiring is correct.

Failure to follow these instructions will result in death or serious injury.

NOTICE

UNINTENDED EQUIPMENT OPERATION

SELV cables must be kept separate from other cables (see "Connections" section).

Failure to follow these instructions can result in equipment damage.

Use copper wires (obligatory).

The table below shows the type and size of permitted cables for the type of screw terminal blocks illustrated below and the torque values:



mm / in.	6.5 / 0.26								
mm²	0.2…2.5	0.2…2.5	0.25…2.5	0.25…2.5	2 x 0.2…0.75	2 x 0.2…0.75	2 x 0.25…0.75	2 x 0.5…1.5
AWG	24…14	24…14	24…14	24…14	2 x 24…18	2 x 24…18	2 x 24…18	2 x 20…16

Ø 3.5 mm (0.14 in.)	N•m	0.5...0.6
	lb-in	4.42...5.31

The table below shows the type and size of permitted cables for the type of screw terminal blocks illustrated below and the torque values:

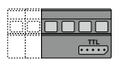

mm / in.	6.0 / 0.24		
mm²	0.05…2.5	0.05…1.5
AWG	30…14	30…16

Ø 3.5 mm (0.14 in.)	N•m	0.5
	lb-in	4.5

NOTICE

UNINTENDED EQUIPMENT OPERATION

- For I/O terminals (probes, digital inputs and Open Collector output), use cables no longer than 10 m (32.80 ft).
- For TTL serial line connection, use cables no longer than 1 m (3.28 ft).
- For all devices powered at 12 Vac/dc, use power cables no longer than 3 m (9.84 ft).

Failure to follow these instructions can result in equipment damage.

The temperature (NTC) probes have no specified connection polarity; the connections can be extended using a normal bipolar cable. Extending the probe wiring influences the electromagnetic compatibility (EMC) of the device.

CONNECTIONS

IDNext 902 P (12 Vac/dc)

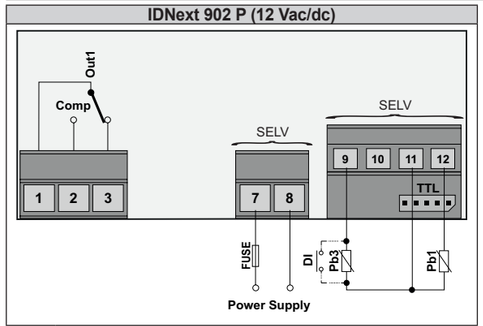

TERMINALS	
1-2-3	Compressor relay (**Out1/Comp**)
7-8	Power supply input 12 Vac/dc
FUSE	Approved 500 mA time-delay fuse (T500mAH250V)
9-11	Digital input DI (**H11**≠0 and **H43**=n) / probe Pb3 (**H11**=0 and **H43**=y)
12-11	Probe Pb1
TTL	TTL serial port
SELV	SELV connections

IDNext 902 P (230 Vac)

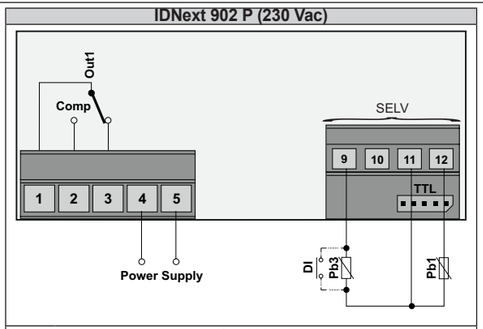

TERMINALS	
1-2-3	Compressor relay (**Out1/Comp**)
4-5	Power supply input 230 Vac
11-9	Digital input DI (**H11**≠0 and **H43**=n) / probe Pb3 (**H11**=0 and **H43**=y)
11-12	Probe Pb1
TTL	TTL serial port
SELV	SELV connections

IDNext 961 P (12 Vac/dc)

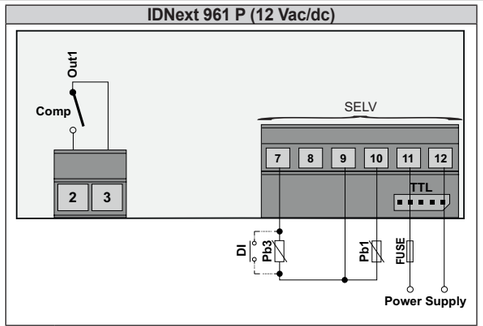

TERMINALS	
2-3	Compressor relay (**Out1/Comp**)
7-9	Digital input DI (**H11**≠0 and **H43**=n) / probe Pb3 (**H11**=0 and **H43**=y)
10-9	Probe Pb1
11-12	Power supply input 12 Vac/dc
FUSE	Approved 500 mA time-delay fuse (T500mAH250V)
TTL	TTL serial port
SELV	SELV connections

IDNext 961 P (230 Vac)

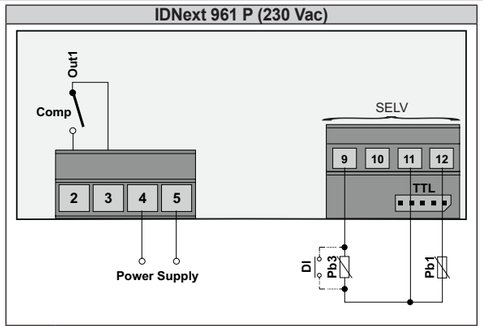

TERMINALS	
2-3	Compressor relay (**Out1/Comp**)
4-5	Power supply input 230 Vac
9-11	Digital input DI (**H11**≠0 and **H43**=n) / probe Pb3 (**H11**=0 and **H43**=y)
12-11	Probe Pb1
TTL	TTL serial port
SELV	SELV connections

IDNext 971 P/B (12 Vac/dc)

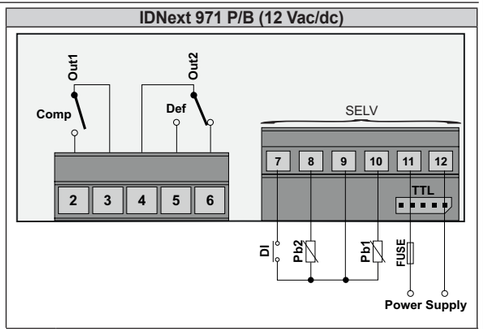

TERMINALS	
2-3	Compressor relay (**Out1/Comp**)
4-5-6	Defrost relay (**Out2/Def**)
7-9	Digital input DI
8-9	Probe Pb2
10-9	Probe Pb1
11-12	Power supply input 12 Vac/dc
FUSE	Approved 500 mA time-delay fuse (T500mAH250V)
TTL	TTL serial port
SELV	SELV connections

IDNext 971 P/B (230 Vac)

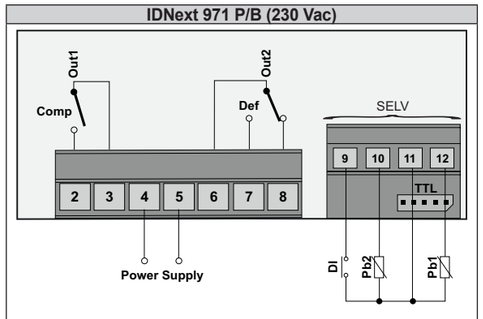

TERMINALS	
2-3	Compressor relay (**Out1/Comp**)
4-5	Power supply input 230 Vac
6-7-8	Defrost relay (**Out2/Def**)
9-11	Digital input DI
10-11	Probe Pb2
12-11	Probe Pb1
TTL	TTL serial port
SELV	SELV connections

IDNext 974 P/B (12 Vac/dc)

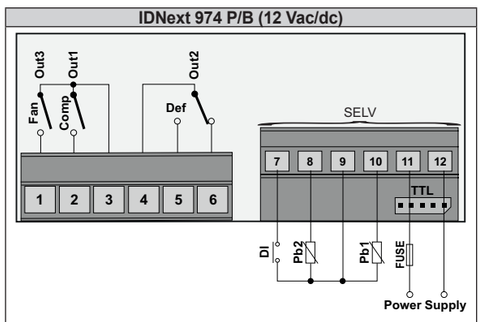

TERMINALS	
1-3	Fans relay (**Out3/Fan**)
2-3	Compressor relay (**Out1/Comp**)
4-5-6	Defrost relay (**Out2/Def**)
7-9	Digital input DI
8-9	Probe Pb2
10-9	Probe Pb1
11-12	Power supply input 12 Vac/dc
FUSE	Approved 500 mA time-delay fuse (T500mAH250V)
TTL	TTL serial port
SELV	SELV connections

IDNext 974 P/B (230 Vac)

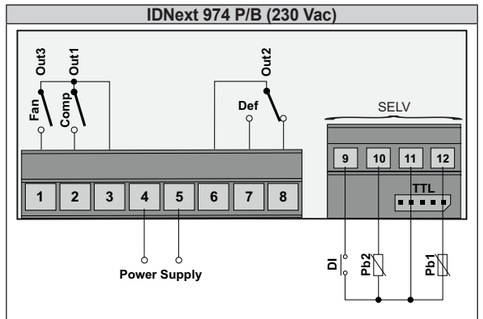

TERMINALS	
1-3	Fans relay (**Out3/Fan**)
2-3	Compressor relay (**Out1/Comp**)
4-5	Power supply input 230 Vac
6-7-8	Defrost relay (**Out2/Def**)
9-11	Digital input DI
10-11	Probe Pb2
12-11	Probe Pb1
TTL	TTL serial port
SELV	SELV connections

IDNext 974 P/C (230 Vac)

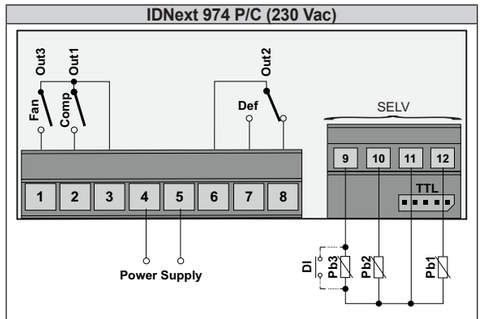

TERMINALS	
1-3	Fans relay (**Out3/Fan**)
2-3	Compressor relay (**Out1/Comp**)
4-5	Power supply input 230 Vac
6-7-8	Defrost relay (**Out2/Def**)
9-11	Digital input DI (**H11**≠0 and **H43**=n) / probe Pb3 (**H11**=0 and **H43**=y)
10-11	Probe Pb2
12-11	Probe Pb1
TTL	TTL serial port
SELV	SELV connections

IDNext 974 P/CI (230 Vac)

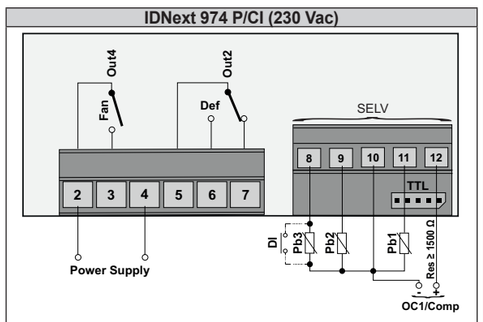

TERMINALS	
2-3	Fans relay (**Out4/Fan**)
2-4	Power supply input 230 Vac
5-6-7	Defrost relay (**Out2/Def**)
8-10	Digital input DI (**H11**≠0 and **H43**=n) / probe Pb3 (**H11**=0 and **H43**=y)
9-10	Probe Pb2
11-10	Probe Pb1
12-10	Open Collector Output (**OC1/Comp**): 10 = negative terminal OC1 (-) and 12 = positive terminal OC1 (+). 16 Vdc ±40 % - Load impedance ≥ 1500 Ω
TTL	TTL serial port
SELV	SELV connections

IDNext 978 P/B (230 Vac)

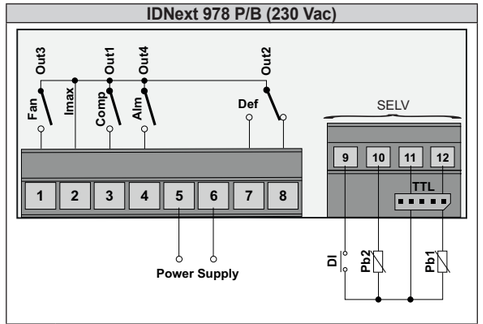

TERMINALS	
1-2	Fans relay (**Out3/Fan**)
3-2	Compressor relay (**Out1/Comp**)
4-2	Alarm relay (**Out4/Alm**)
5-6	Power supply input 230 Vac
2-7-8	Defrost relay (**Out2/Def**)
9-11	Digital input DI
10-11	Probe Pb2
12-11	Probe Pb1
Imax	Maximum current 17 A
TTL	TTL serial port
SELV	SELV connections

IDNext 978 P/C (230 Vac)

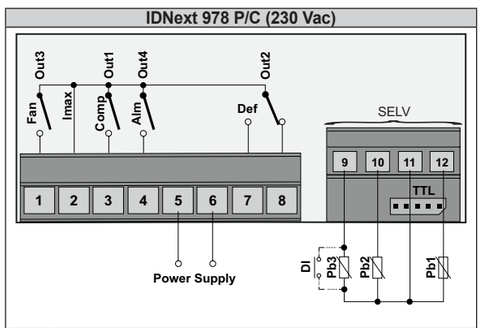

TERMINALS	
1-2	Fans relay (**Out3/Fan**)
3-2	Compressor relay (**Out1/Comp**)
4-2	Alarm relay (**Out4/Alm**)
5-6	Power supply input 230 Vac
2-7-8	Defrost relay (**Out2/Def**)
9-11	Digital input DI (**H11**≠0 and **H43**=n) / probe Pb3 (**H11**=0 and **H43**=y)
10-11	Probe Pb2
12-11	Probe Pb1
Imax	Maximum current 17 A
TTL	TTL serial port
SELV	SELV connections

IDNext 978 P/CI (230 Vac)

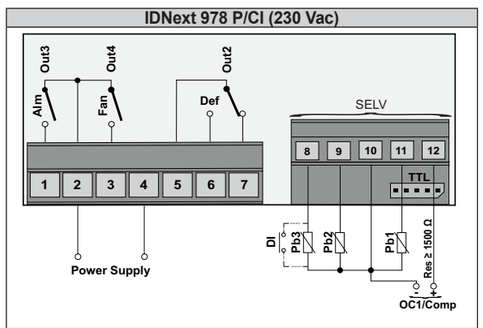

TERMINALS	
1-2	Alarm relay (**Out3/Alm**)
3-2	Fans relay (**Out4/Fan**)
2-4	Power supply input 230 Vac
5-6-7	Defrost relay (**Out2/Def**)
8-10	Digital input DI (**H11**≠0 and **H43**=n) / probe Pb3 (**H11**=0 and **H43**=y)
9-10	Probe Pb2
11-10	Probe Pb1
12-10	Open Collector Output (**OC1/Comp**): 10 = negative terminal OC1 (-) and 12 = positive terminal OC1 (+). 16 Vdc ±40 % - Load impedance ≥ 1500 Ω
TTL	TTL serial port
SELV	SELV connections

MODELS LIST

Model	Description
IDNext 902 P	IDNext 902 P NTC 10A 12 Vac/dc AIR -HC
	IDNext 902 P NTC 10A 230 Vac AIR -HC
IDNext 961 P	IDNext 961 P NTC 2Hp 12 Vac/dc AIR -HC
	IDNext 961 P NTC 2Hp 230 Vac AIR -HC
IDNext 971 P/B	IDNext 971 P NTC 2Hp/8 12 Vac/dc BUZ AIR -HC
	IDNext 971 P NTC 2Hp/8 230 Vac BUZ AIR -HC
IDNext 974 P/B	IDNext 974 P NTC 2Hp/8/5 12 Vac/dc BUZ AIR -HC
	IDNext 974 P NTC 2Hp/8/5 230 Vac BUZ AIR -HC
IDNext 978 P/B	IDNext 978 P NTC 1,5Hp/8/5/5 230 Vac BUZ AIR -HC
IDNext 974 P/C	IDNext 974 P NTC 2Hp/8/5 230 Vac RTC AIR -HC
IDNext 978 P/C	IDNext 978 P NTC 1,5Hp/8/5/5 230 Vac RTC AIR -HC
IDNext 974 P/CI	IDNext 974 P NTC VSC/1,5Hp/8 230 Vac RTC AIR -HC
IDNext 978 P/CI	IDNext 978 P NTC VSC/1,5Hp/8/5 230 Vac RTC AIR -HC

Legend:
/B = device with Buzzer;
/C = device with RTC (Clock);
/I = device with Open Collector output for connecting a variable-speed compressor

TECHNICAL DATA

The product complies with the following harmonized Standards: EN 60730-1 and EN 60730-2-9.

Construction of control:	Electronic automatic Incorporated Control
Purpose of control:	Operating control (not safety related)
Type of action:	1.C
Degree of protection by enclosure:	IP20 IP65 front panel only (tested in accordance with EN 60529 with a steel sheet 2 mm (0.08 in.) thick ±10 %)
Pollution degree:	2
Overvoltage category:	II
Rated impulse voltage:	2500 V
Power supply:	See 'Power supply / power draw' table
Power draw (maximum):	See 'Power supply / power draw' table
Ambient operating conditions:	Temperature: -5...55 °C (23...131 °F) Humidity: 10…90 % RH (non-condensing)
Transportation and storage conditions:	Temperature: -30...85 °C (-22...185 °F) Humidity: 10…90 % RH (non-condensing)
Software class:	A
Loads:	See 'Loads' table
Environmental front panel rating:	Type 1
Temperature for the ball pressure test:	Front and Rear cover: 128 °C Terminal blocks: 107 °C

'Power supply / power draw' table

Model	Power supply	Power draw (maximum)
IDNext 902 P (12 Vac/dc)	12 Vac ±10% 50/60 Hz / 12 Vdc ±10% Classe 2/SELV	3 VA / 1.5 W
IDNext 902 P (230 Vac)	230 Vac (±10 %) 50/60 Hz	5 VA
IDNext 961 P (12 Vac/dc)	12 Vac ±10% 50/60 Hz / 12 Vdc ±10% Classe 2/SELV	5 VA / 2.5 W
IDNext 961 P (230 Vac)	230 Vac (±10 %) 50/60 Hz	5.5 VA
IDNext 971 P/B (12 Vac/dc)	12 Vac ±10% 50/60 Hz / 12 Vdc ±10% Classe 2/SELV	5 VA / 2.5 W
IDNext 971 P/B (230 Vac)	230 Vac (±10 %) 50/60 Hz	5.5 VA
IDNext 974 P/B (12 Vac/dc)	12 Vac ±10% 50/60 Hz / 12 Vdc ±10% Classe 2/SELV	5 VA / 2.5 W
IDNext 974 P/B (230 Vac)	230 Vac (±10 %) 50/60 Hz	5.5 VA
IDNext 974 P/C (230 Vac)	230 Vac (±10 %) 50/60 Hz	5.5 VA
IDNext 974 P/CI (230 Vac)	230 Vac (±10 %) 50/60 Hz	5.5 VA
IDNext 978 P/B (230 Vac)	230 Vac (±10 %) 50/60 Hz	5.5 VA
IDNext 978 P/C (230 Vac)	230 Vac (±10 %) 50/60 Hz	5.5 VA
IDNext 978 P/CI (230 Vac)	230 Vac (±10 %) 50/60 Hz	5.5 VA

'Loads' table

Model	Output	EU (maximum 230 Vac)	USA (maximum 230 Vac)
IDNext 902 P	**Out1/Comp**	NO 10(6) A - NC 9(5) A - CO 9 A resistive	NO 10 A - NC 9 A resistive - 5FLA 30LRA
IDNext 961 P	**Out1/Comp**	12(8) A	12FLA 72LRA
IDNext 971 P/B	**Out1/Comp**	12(8) A	12FLA 72LRA
	Out2/Def	NO 8(4) A - NC 6(3) A - CO 6 A resistive	NO 8 A - NC 6 A - CO 6 A resistive NO 4.9FLA 29.4LRA
IDNext 974 P/B IDNext 974 P/C	**Out1/Comp**	12(8) A	12FLA 72LRA
	Out2/Def	NO 8(4) A - NC 6(3) A - CO 6 A resistive	NO 8 A - NC 6 A - CO 6 A resistive NO 4.9FLA 29.4LRA
	Out3/Fan	5(2) A	5 A resistive - 2FLA 12LRA
IDNext 974 P/CI	**OC1/Comp**	16 Vdc ±40 %, Load impedance ≥ 1500 Ω	
	Out2/Def	NO 8(4) A - NC 6(3) A - CO 6 A resistive	NO 8 A - NC 6 A - CO 6 A resistive NO 4.9FLA 29.4LRA
	Out4/Fan	10(6) A	10FLA 60LRA
IDNext 978 P/B IDNext 978 P/C	**Out1/Comp**	10(6) A	10FLA 60LRA
	Out2/Def	NO 8(4) A - NC 6(3) A - CO 6 A resistive	NO 8 A - NC 6 A - CO 6 A resistive NO 4.9FLA 29.4LRA
	Out3/Fan	5(2) A	5 A resistive - 2FLA 12LRA
	Out4/Alm	5(2) A	5 A resistive - 2FLA 12LRA
	Imax = Maximum current 17 A on common pole (**Out1+Out2+Out3+Out4**).		
IDNext 978 P/CI	**OC1/Comp**	16 Vdc ±40 %, Load impedance ≥ 1500 Ω	
	Out2/Def	NO 8(4) A - NC 6(3) A - CO 6 A resistive	NO 8 A - NC 6 A - CO 6 A resistive NO 4.9FLA 29.4LRA
	Out3/Alm	5(2) A	5 A resistive - 2FLA 12LRA
	Out4/Fan	10(6) A	10FLA 60LRA

Models 12 Vac/dc

⚠⚠ DANGER

HAZARD OF ELECTRIC SHOCK, OVERHEATING AND/OR FIRE

- Do not connect the equipment power supply directly to line voltage.
- Use only isolating SELV, Class 2 power supplies/transformers to supply the equipment.

Failure to follow these instructions will result in death or serious injury.

FURTHER INFORMATION

Input Characteristics

Display range:	-99.9…99.9 or -999…999	
Measurement range:	**NTC**: -50...110 °C (-58...230 °F) **PTC**: -55...140 °C (-67...284 °F) **Pt1000**: -55...150 °C (-67...302 °F)	(on 3-digit display with +/- sign)
Accuracy:	**NTC**: -50...-30 °C (-58...-22 °F) -30...110 °C (-22...230 °F) **PTC**: -55...140 °C (-67...284 °F) **Pt1000**: -55...150 °C (-67...302 °F)	Better than ±2.4 °C (±4.3 °F) ±1 digit Better than ±1.6 °C (±2.9 °F) ±1 digit Better than ±2.0 °C (±3.5 °F) ±1 digit Better than ±2.3 °C (±4.1 °F) ±1 digit
Resolution:	0.1 °C/°F or 1 °C/°F (depending on the display range setting)	
Buzzer:	YES (depends on model)	
Analog Inputs:	**IDNext 902/961**: 1 NTC/PTC/Pt1000 input (**Pb1**) **IDNext 971/974/978**: 2 NTC/PTC/Pt1000 inputs (**Pb1** and **Pb2**)	
Digital Inputs:	**IDNext 902/961 P**: 1 voltage free digital input (**DI***) **IDNext 971/974/978 P/B**: 1 voltage free digital input (**DI**) **IDNext 974/978 P/C**: 1 voltage free digital input (**DI***) **IDNext 974/978 P/CI**: 1 voltage free digital input (**DI***) (*) **DI** can also be configured as a probe input Pb3 (**H11**=0 and **H43**=y)	

Mechanical Characteristics

Terminals:	Screw terminal blocks
Connectors:	TTL serial port for connection of compatible accessories
Dimensions:	Front panel 80.5 x 34.5 mm (3.17 x 1.36 in.), depth 60 mm (2.36 in.)
Mounting panel thickness:	0.5...7.5 mm (0.02...0.3 in.)

Note: the technical characteristics provided in this document concerning measurement (range, accuracy, resolution, etc.) refer to the device itself only and not to any accessories supplied, such as the probes.

Eliwell Controls s.r.l.
Via dell'Industria, 15 - Z.I. Paludi
32016 Alpago (BL) ITALY
T: +39 0437 986 111
www.eliwell.com

Customer Technical Support
T: +39 0437 986 300
E: Techsupeliwell@se.com

Sales
T: +39 0437 986 100 (Italy)
T: +39 0437 986 200 (other countries)
E: saleseliwell@se.com

UK Authorized Representative:
Schneider Electric Limited
Stafford Park 5
Telford, TF3 3BL
United Kingdom

9IS54839EN.01 • IDNext -HC • EN • 04/2022

© 2022 Eliwell • All rights reserved

MADE IN ITALY

by Schneider Electric

9IS54839EN01

IDNext -HC

EN **Electronic devices compatible with flammable refrigerant gases**

www.eliwell.com

USER INTERFACE

IDNext 902/961 -HC



IDNext 971/974/978 -HC



KEYS

Key	Function (press and release)	Function (press for at least 5 seconds)
△	• Scroll through the menu options. • Increase the values.	From outside the menus only. Can be configured by the user (parameter **H31**). Default: activate manual defrost.
☆	Direct access to the function set with parameter **H35**. From outside the menus only.	/
▽	• Scroll through the menu options. • Decrease the values.	• From outside the menus only. Can be configured by the user (parameter **H32**). • Unlock keypad (press for at least 3 seconds).
⏻	• Go back (up one level) in the menu. • Confirm the parameter value.	From outside the menus only. Can be configured by the user (parameter **H33**). Default: activate stand-by.
💡	Direct access to the function set with parameter **H34**. From outside the menus only.	/
SET	• Access the 'Machine Status' menu. • Display alarms (if present).	• Access the 'Programming' menu. • Confirm commands.
▽ + **SET**	Press both simultaneously for at least 5 seconds at device power-on to load the preset applications (only after unlocking the keypad).	

ICONS

Icon	Function	Description
❄	Compressor	• Permanently on: compressor active • Flashing: delay, protection or activation inhibited • Off: compressor not active
❄	Defrost	• Permanently on: defrost active • Flashing: defrost activated manually or via digital input • Off: defrost not active
	Evaporator fans	• Permanently on: fans active • Off: fans not active
	Middle VSC speed	• Permanently on: Vmin ≤ required speed < 90 % Vmax • Off: 0% ≤ required speed < Vmin
	Maximum VSC speed	• Permanently on: required speed ≥ 90 % Vmax • Off: required speed < 90 % Vmax
💡	Light	• Permanently on: light on • Off: light off
	Heating	• Permanently on: heating regulator active • Off: heating regulator not active
⚠	Alarm	• Permanently on: alarm present • Flashing: alarm silenced • Off: no alarm active
	Temperature	• Permanently on: a temperature is displayed (°C or °F) • Off: a value not relating to temperature or a label is displayed
AUX	Aux	• Permanently on: AUX output active (depending on model) • Flashing: deep cooling cycle active • Off: AUX output not active
	Energy saving	• Permanently on: energy saving active • Flashing: reduced set active

Note: **Vmin** = minimum compressor speed; **Vmax** = maximum compressor speed.
Note: Some icons may be associated with unavailable functions, depending on the model.

KEYPAD UNLOCK

At device power on or after 30 seconds since last action on the user interface, the device keypad locks automatically. If the keypad is locked and any key is pressed, the label '**LoC**' will appear.

To unlock the keypad, press and hold ▽ for at least 3 seconds until the label '**UnL**' appears.

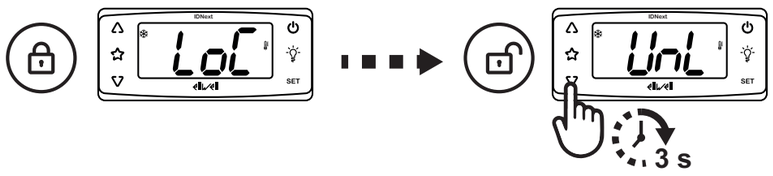

MECHANICAL ASSEMBLY

The device is designed for panel mounting. Drill a 71x29 mm (2.80x1.14 in.) hole and insert the device; secure it with the special brackets provided. Keep the area around the device cooling slots adequately ventilated.
The panel thickness must be between 0.5 mm (0.02 in.) and 7.5 mm (0.30 in.) inclusive.

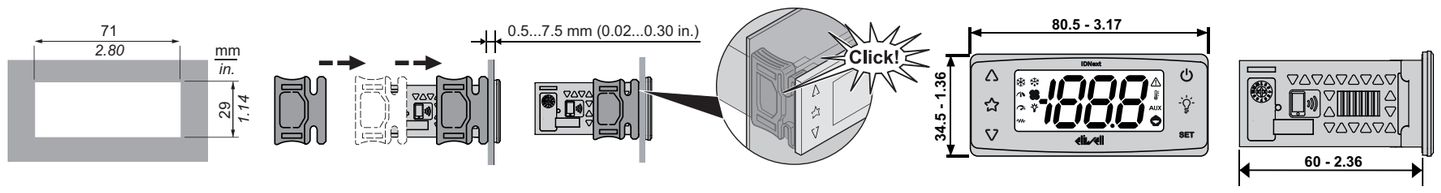

PROBE TYPE SELECTION

Connect to the device only probes of the same type (PTC, NTC or Pt1000). The procedure to select the probe type is:

1. To unlock the keypad, press and hold ▽ for at least 3 seconds, until the label **'UnL**' appears
2. Press and hold for at least 5 seconds **SET**
3. Scroll through the parameters with △ and ▽ until the label **'PA2**' is found
4. Press and release **SET** (the value 0 will be displayed)
5. Set the value **PA2** (default = 15) using △ and ▽
6. Confirm the value by pressing **SET** (the first folder will be displayed)
7. Scroll through the folders with △ and ▽ until the label '**CnF**' is found
8. Press and release **SET**
9. Scroll through the parameters with △ and ▽ until the label '**H00**' is found
10. Press and release **SET**
11. Set the probe type (**0**=PTC / **1**=NTC / **2**=Pt1000) using △ and ▽
12. Confirm the selected probe type using **SET** or ⏻ or letting a timeout occur (15 seconds).

APPLICATION SELECTION

The procedure to load one of the preset applications is:

1. If the device is on, switch it off
2. Switch on the device
3. Press and hold ▽ for at least 3 seconds, until the keypad unlock label '**UnL**' appears
4. Within 30 seconds since the device power-on, press and hold (**SET** + ▽) for at least 5 seconds, until the label '**AP1**' appears
5. Scroll through applications **AP1**, **AP2** and **AP3** using △ and ▽
6. Confirm the selected preset application using **SET**.
   Note: The process can be canceled by pressing ⏻ or letting a timeout occur (15 seconds)
7. If the procedure completes successfully, the display will show '**yES**', otherwise it will show '**no**'
8. The device will restart.

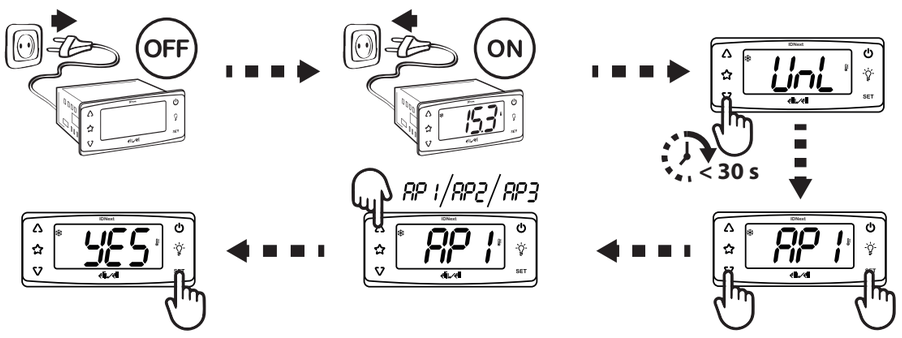

The procedure to load one of the preset applications restores the respective default parameters values, with the exception of the parameters NON specific for the application that retain the value set previously. These values, left unaltered, may not be correct and may therefore need to be changed.

NOTICE

INOPERABLE DEVICE
Verify the parameters after loading a preset application.
Failure to follow these instructions can result in equipment damage.

ACCESSING AND USING THE MENUS

Resources are organized into 2 menus which are accessed as explained below:

- '**Machine Status**' menu: press and release **SET**.
- '**Programming**' menu: press **SET** for at least 5 seconds.

If the keypad is not pressed for more than 15 seconds (time-out) or pressing ⏻ once confirms the last value shown on the display and the previous view is displayed.

MACHINE STATUS MENU

Access the 'Machine Status' menu by pressing and releasing **SET**. If no alarms are active, the 'SEt' label appears. By pressing △ and ▽ is possible to scroll all folders in the menu:

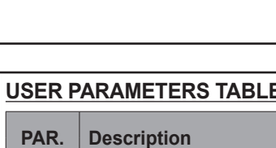

- **AL**: alarms folder (**only visible if alarms are active**)
- **SEt**: setpoint setting folder
- **Pb1**: probe Pb1 value folder
- **Pb2**: probe Pb2* value folder (**IDNext 971/974/978** only)
- **Pb3**: probe Pb3** value folder

*** folder displayed if Pb2 present (H42 = y)**
**** folder displayed if Pb3 present (H11 = 0 and H43 = y)**

Setpoint setting: To display the setpoint value press **SET** when the 'SEt' label is displayed. The setpoint value appears on the display. To change the setpoint value, press △ and ▽ within 15 seconds. Press **SET** to confirm changes.

Probes display: When Pb1, Pb2 or Pb3 label is displayed, press **SET** and the associated value will appear.
Note: the displayed value cannot be changed.

PROGRAMMING MENU

To access the '**Programming**' menu, press **SET** for at least 5 seconds. If PASSWORD protection is activated, a prompt will appear: enter **PA1** for access **User** parameters or **PA2** for access **Installer** parameters (default password: 15).

User parameters: When the menu is accessed, the display will show the first parameter (**diF**). Press △ and ▽ to scroll through all parameters in the current level. Select the desired parameter by pressing **SET**. Press △ and ▽ to change its value and **SET** to save changes.

Installer parameters: When the menu is accessed, the display will show the first folder (**CP**). Press △ and ▽ to scroll through the current level folders. Select the desired folder using **SET**. Press △ and ▽ to scroll through the parameters in the current folder and select the parameter using **SET**. Press △ and ▽ to change its value and **SET** to save changes.

Note: Switch the device off and then on again each time the configuration of the parameters is changed.

USING THE UNICARD

Connect the UNICARD to the TTL serial port to allow the rapid programming of device parameters.

- Upload (**UL**): Access the **Installer** parameters by entering **PA2**, press △ and ▽ to scroll through the folders until folder **FPr** appears. Press **SET** to select it, press △ and ▽ to scroll through the parameters, select **UL** and press **SET**. This function uploads the programming parameters from the device to the UNICARD. If the operation is successful, the display will show **yES**, otherwise it will show **no**.
- Format (**Fr**): Access the **Installer** parameters by entering **PA2**, press △ and ▽ to scroll through the folders until folder **FPr** appears. Press **SET** to select it, press △ and ▽ to scroll through the parameters, select **Fr** and press **SET**.This command is used to format the UNICARD (necessary when using the card for the first time). **Note**: the **Fr** parameter deletes all data present. It's not possible to stop and/or undo this task.
- Download: Connect the UNICARD when the device is switched off. At power-on, data will automatically start downloading from the UNICARD to the device. At the end of the lamp test, the display will show **dLy** if the operation was successful and **dLn** if not successful.

Note: After the parameters have been downloaded, the device uses the downloaded parameter map settings.

DIAGNOSTICS

Alarms are always indicated by the buzzer (if present), the relay (if present and active) and the alarm icon ⚠.

To silence the buzzer, press and release any key, the alarm icon ⚠ will continue to flash and the relay (if present and active) is deenergized.

Note: if alarm exclusion times have been set (see **AL** folder in the parameters table) the alarm will not be indicated.

ALARMS

Label	Description	Buzzer and alarm relay	Cause	Effect	Solution
E1	Probe Pb1 error	Actives	• Measured values are outside operating range • Probe or corresponding wiring in short-circuit or open circuit	• Label **E1** displayed • Alarm icon ⚠ permanently on • Maximum and minimum alarms regulator disabled • Compressor operation based on parameters **Ont** and **OFt**.	• Verify probe type (**H00**) • Verify probe wiring • Replace probe
E2	Probe Pb2 error **IDNext 97•** only	Actives	• Measured values are outside operating range • Probe or corresponding wiring in short-circuit or open circuit	• Label **E2** displayed • Alarm icon ⚠ permanently on • Defrost will end due to Timeout (**dEt**) • The evaporator fans will be ON if the compressor is ON, and will operate based on parameter **FCO** if the compressor is OFF.	• Verify probe type (**H00**) • Verify probe wiring • Replace probe
E3	Probe Pb3 error	Actives	• Measured values are outside operating range • Probe or corresponding wiring in short-circuit or open circuit	• Label **E3** displayed • Alarm icon ⚠ permanently on	• Verify probe type (**H00**) • Verify probe wiring • Replace probe
AH1	Alarm due to Pb1 HIGH Temperature	Actives	Value read by probe Pb1>**HAL** for longer than time **tAO**	• Alarm **AH1** added to folder AL • No effect on regulation	Wait for the temperature read by Pb1 to drop below the alarm threshold (**HAL-AFd**).
AL1	Alarm due to Pb1 LOW Temperature	Actives	Value read by probe Pb1<**LAL** for longer than time **tAO**.	• Alarm **AL1** added to folder AL • No effect on regulation	Wait for the temperature read by Pb1 to rise above the alarm threshold (**LAL+AFd**).
EA	External alarm	Actives	Activation of the digital input (**H11**=±5)	• Alarm **EA** added to folder AL • Alarm icon ⚠ permanently on • Regulation inhibited if **EAL**=y	Verify and remove the external cause that caused the alarm on the digital input
OPd	Open door alarm	Actives	Activation of the digital input for a time greater than **tdO** (**H11**=±4)	• Alarm **Opd** added to folder AL • Alarm icon ⚠ permanently on • Regulator inhibited	Close the door
Ad2	Defrost due to timeout	Not actives	End of defrost due to timeout, instead of the defrost end temperature.	• Alarm **Ad2** added to folder AL • Alarm icon ⚠ permanently on	Wait for the next defrost for an automatic deactivation
COH	Overheating alarm	Actives	Value set by parameter **SA3** exceeded.	• Alarm **COH** added to folder AL • Alarm icon ⚠ permanently on • Compressor regulation inhibited	Wait for the temperature read by Pb3 to drop below the alarm threshold (**SA3-dA3**).
E10	Clock alarm **Note**: models with RTC only	Not actives	Clock alarm or battery low	• Alarm **E10** added to folder AL • Functions related to the clock not present or not synchronized with the real time	Set the correct time. If the error persists, replace the device (RTC battery low)
rFA	Low refrigerant alarm	Not actives	Even with the compressor on, the temperature trend does not fall within the interval set by **rFT**	• Alarm **rFA** added to folder AL • Alarm icon ⚠ permanently on	Switch the device off and on again. The alarm is deactivated if **rFT**=0.
nPA	Pressure switch alarm	Not actives	Pressure switch alarm activation caused by the external pressure switch.	If the number **n** of pressure switch activations is **n < PEn**: • Alarm **nPA** added to folder AL with the number of pressure switch activations • Compressor regulation inhibited	Verify and remove the cause that triggered the alarm on the digital input (automatic reset)
PAL	Pressure switch alarm	Actives	Pressure switch alarm activation caused by the external pressure switch.	If the number **n** of pressure switch activations is **n = PEn** in a time period < **PEi**: • Label **PAL** displayed • Alarm **PA** added to folder AL and alarm **nPA** removed from folder AL • Alarm icon ⚠ permanently on • Fans, compressor and defrost regulation inhibited	• Switch the device off and on again • Reset alarms by entering the functions folder and selecting **rAP** (Manual Reset)

USER PARAMETERS TABLE

PAR.	Description	Range	IDNext model					MU
			902	961	971	974	978	
SEt	Temperature regulation setpoint.	LSE...HSE	3.0	3.0	3.0	3.0	3.0	°C/°F
diF	diFferential. Compressor relay activation differential.	0.1...30.0	2.0	2.0	2.0	2.0	2.0	°C/°F
LSE	Minimum setpoint value.	-67.0...HSE	-55.0	-55.0	-55.0	-55.0	-55.0	°C/°F
HSE	Maximum setpoint value.	LSE...302	140	140	140	140	140	°C/°F
dit	Interval between the start of two defrosts.	0...250	6	6	6	6	6	hours
dEt	Determines the maximum duration of the defrost.	1...250	30	30	30	30	30	min
dS1	Defrost end temperature.	-67.0...302	-	-	8.0	8.0	8.0	°C/°F
dS2	Evaporator 2 defrost end temperature. * Models **974 P/C**, **974 P/CI**, **978 P/C** and **978 P/CI** only.	-67.0...302	-	-	-	0.0*	0.0*	°C/°F
dt	Dripping time.	0...250	-	-	0	0	0	min
FSt	Evaporator fan disabling temperature.	-67.0...302	-	-	8.0	8.0	8.0	°C/°F
Fdt	Fan activation delay time after a defrost.	0...250	-	-	0	0	0	min
dFd	Used to select or deselect the exclusion of the evaporator fans during defrosting. **n**(0) = no, **y**(1) = yes (fan excluded, off).	n/y	-	-	y	y	y	flag
HAL	Maximum temperature alarm.	LAL...302	150	150	150	150	150	°C/°F
LAL	Minimum temperature alarm.	-67.0...HAL	-50.0	-50.0	-50.0	-50.0	-50.0	°C/°F
CA1 (!)	Positive or negative temperature value to be added to Pb1 value (if it is not necessary to force an additional value (with sign) to probe reading, set **CA1** = 0.0).	-30.0...30.0	0.0	0.0	0.0	0.0	0.0	°C/°F
CA2 (!)	Positive or negative temperature value to be added to Pb2 value (if it is not necessary to force an additional value (with sign) to probe reading, set **CA2** = 0.0).	-30.0...30.0	-	-	0.0	0.0	0.0	°C/°F
PS1	When enabled (**PS1**≠0) this is the access key to **User** parameters.	0...250	0	0	0	0	0	num
H42	Probe Pb2 presence. **n** (0) = not present; **y** (1) = present.	n/y	-	-	y	y	y	num
tAb	Parameters table. **Reserved**: read-only parameter.	/	/	/	/	/	/	/
PA2	Used to access **Installer** parameters.							

Note: if one or more parameters marked with (!) are modified, the device must be switched off and then on again.
Note: for the complete list of parameters, please refer to the user manual (see QR-Code at the start of the document).

RESPONSIBILITY AND RESIDUAL RISKS

Electrical equipment should be installed, operated, serviced, and maintained only by qualified personnel.
The liability of Schneider Electric and Eliwell is limited to the correct and professional use of the product according to the directives referred to herein and in the other supporting documents, and does not cover any damage (including but not limited to) the following causes:

- unspecified installation/use and, in particular, in contravention of the safety requirements of the legislation in force in the country of installation and/or specified in this document;
- use on equipment which does not provide adequate protection against electrocution, water and dust in the actual installation conditions;
- use on equipment allowing access to dangerous parts without having to use a keyed or tooled locking mechanism to access the equipment;
- tampering with and/or modification of the product;
- installation/use on equipment that does not comply with the regulations in force in the country of installation.

CONDITIONS OF USE

Permitted use
The device must be installed and used in accordance with the instructions provided. In particular, parts carrying dangerous voltages must not be accessible under normal conditions. The device must be adequately protected from water and dust according to the application, and must be accessible only using a keyed or tooled locking mechanism (except for the front panel).
The device is suitable for use in commercial or household refrigeration appliances and/or similar equipment and has been tested in accordance with the harmonized European reference standards.

Prohibited use
Any use other than that expressly permitted is prohibited. The relay contacts provided are mechanical and subject to failure; any protection devices required by product standards, or suggested by good practice in view of obvious safety requirements, must be installed externally of the device.

DISCLAIMER

This document is the exclusive property of Eliwell and may not be reproduced or circulated without the express permission of Eliwell. While all possible care has been taken to ensure the accuracy of this document, Eliwell cannot accept liability for any damage resulting from its use. The same applies to any person or company involved in preparing and editing this document. Eliwell reserves the right to make aesthetic or functional changes at any time without notice.

DISPOSAL

The device (or the product) must be disposed of separately in compliance with the local standards in force on waste disposal.