RTX 600 /V DOMINO ZERO

Devices used to control remote counters and cold rooms with pulse electronic expansion valve management

User Manual

11/2022

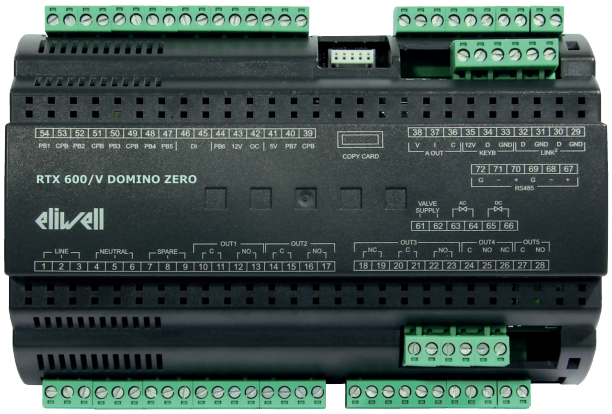

RTX_V-03EN

www.eliwell.com

eliwell
by Schneider Electric

Legal Information

The Schneider Electric brand and any trademarks of Schneider Electric SE and its subsidiaries referred to in this guide are the property of Schneider Electric SE or its subsidiaries. All other brands may be trademarks of their respective owners.

This guide and its content are protected under applicable copyright laws and furnished for informational use only. No part of this guide may be reproduced or transmitted in any form or by any means (electronic, mechanical, photocopying, recording, or otherwise), for any purpose, without the prior written permission of Schneider Electric.

Schneider Electric does not grant any right or license for commercial use of the guide or its content, except for a nonexclusive and personal license to consult it on an "as is" basis. Schneider Electric products and equipment should be installed, operated, serviced, and maintained only by qualified personnel.

As standards, specifications, and designs change from time to time, information contained in this guide may be subject to change without notice.

To the extent permitted by applicable law, no responsibility or liability is assumed by Schneider Electric and its subsidiaries for any errors or omissions in the informational content of this material or consequences arising out of or resulting from the use of the information contained herein.

As part of a group of responsible, inclusive companies, we are updating our communications that contain non-inclusive terminology. Until we complete this process, however, our content may still contain standardized industry terms that may be deemed inappropriate by our customers.

© 2022 Eliwell. All rights reserved.

Index

Safety information **8**
About the book **11**
Overview of the range **14**
Introduction 15
Box contents 15
Models 16
Main features 16
Main components 18
Accessories 19
List of valves 20
Preliminary configurations **21**
Introduction 22
Available applications 23
Application AP1 24
Application AP2 25
Application AP3 26
Application AP4 27
Application AP5 28
Application AP6 29
Application AP7 30
Application AP8 31
Mechanical installation **32**
Before starting 33
Power supply disconnection 33
Considerations concerning programming 33
Operating environment 34
Comments concerning installation 34
Installation 35
Electrical connections **37**
Best wiring practices 38
Wiring guidelines 39
Serial connections 44
Connectors 45
Wiring diagrams 47
Technical characteristics **51**
Introduction 52
Environmental and electrical characteristics 52
Input characteristics 53
Output characteristics 54
Serial ports 54
Power supply 55
Auxiliary EEV power supply 55
User interface and operation **56**
KDEPlus Terminal 57

KDWPlus Terminal ... 58
KDT Terminal (Vertical and Horizontal) ... 60
KDX Terminal ... 62
Device connection with terminal and/or echo viewer ... 64
Using the device ... 66
"Machine Status" Menu ... 69
`Programming" menu ... 70
Setting and calibrating the probes ... 71
Setting the displayed values ... 72
Connection with Televis protocol ... 74
Tools ... 75
MFK (Multi Function Key) ... 76
UNICARD ... 76
Copy parameters (UNICARD/MFK) ... 77
Boot Loader Firmware ... 78
Terminal shared on Link2 ... 78
Electronic Expansion Valve (EEV) ... 79
Introduction ... 80
List of valves ... 81
Valve type ... 82
Refrigerant type ... 83
Local pressure transducer (4...20 mA) ... 84
Local ratiometric transducer ... 84
Pressure/ratiometric transducer shared via Link2 ... 85
Ratiometric transducer shared via hardware ... 86
Remote backup saturation probe ... 86
Superheat probe ... 86
Protection fuse ... 87
Valve regulation parameters ... 89
EEV driver description ... 90
Manual EEV management ... 91
EEV driver regulation ... 92
RTX DOMINO ZERO Tuning ... 94
Local Network ... 98
Introduction ... 99
Supervision gateway ... 99
Temperature probe sharing ... 100
Synchronized Defrost ... 101
Simultaneous Defrost ... 102
Sequential Defrost ... 104
Display shared on Link2 ... 106
Setpoint value sharing ... 106
Sharing commands ... 107
Sharing buzzer and alarm silenced command ... 107
Defrost ... 108
Defrost/Dripping ... 109
Display and alarm operation ... 110

Automatic Defrost ... 111
Manual defrost ... 112
RTC Defrost ... 114
Electric heater defrost ... 116
Inversion defrost ... 118
Hot gas defrost for plug-in systems ... 120
Hot gas defrost for systems with remote group ... 121
Modulating electric heater defrost: Smart Defrost ... 122
Dual evaporator defrost ... 123
Regulators ... 124
Regulation ... 125
Single Thermostat regulation (rE=0) ... 126
Dual Thermostat in series regulation (rE=1) ... 127
Dual Thermostat in parallel regulation (rE=2) ... 128
Two independent generic purpose regulators (rE=4) ... 129
Continuous Modulation (rE=5 or 6) ... 130
Compressor ... 131
Evaporator Fans ... 135
Modulated Fans ... 141
Condenser Fans ... 144
Preheating ... 145
Energy Saving ... 146
Deep Cooling Cycle (DCC) ... 147
Anti-sweater heaters (Frame heater) ... 149
Auxiliary Output (AUX) ... 152
Auxiliary Output (Light) ... 153
Door control / External alarm ... 154
Stand-by ... 156
Soft Start ... 157
Pump down (Pump out) ... 158
Compressor oil heater ... 159
Counter Cleaning Function ... 160
Practical examples ... 161
Floating suction for positive superheat ≥ 4 K) ... 162
Floating suction with low superheat (~ 0 K) ... 163
Diagnostics ... 165
Alarms and indications ... 166
Probe alarms ... 168
Minimum and maximum temperature alarm ... 169
Defrost ended due to timeout alarm ... 171
External alarm ... 172
Door open alarm ... 173
Parameters ... 174
User parameters RTX 600 /V ... 175
Installer parameters RTX 600 /V ... 187
Modbus MSK 756 functions and resources ... 215
Setting parameters via Modbus ... 216

Modbus table content 217
Table of Modbus Parameters 219
Folder Visibility Table 323
Table of Modbus Resources 327

Safety information

Important information

Read these instructions carefully and visually inspect the equipment to familiarize yourself with the device before attempting to install it and/or put it into operation, or before servicing it. The following warning messages may appear anywhere in this documentation or on the equipment to warn of potential dangers or to call attention to information that can clarify or simplify a procedure.



The addition of this symbol to a "Danger" or "Warning" safety label indicates that an electrical hazard exists which will result in personal injury if the instructions are not followed.



This is the safety warning symbol. It is used to warn the user of the potential dangers of personal injury. Observe all the safety warnings that follow this symbol to avoid the risk of serious injury or death.

⚠ DANGER

DANGER indicates a dangerous situation which, if not avoided, **will result in** death or serious injury.

⚠ WARNING

WARNING indicates a dangerous situation which, if not avoided, **could result in** death or serious injury.

⚠ CAUTION

CAUTION indicates a potentially dangerous situation which, if not avoided, **could result in** minor or moderate injury.

NOTICE

NOTICE used in reference to procedures not associated with physical injuries.

Please Note

Electrical equipment must only be installed, used and repaired by qualified technicians. Schneider Electric and Eliwell do not accept any liability for any consequences arising from the use of this material. An authorized person is someone in possession of the skills and knowledge applicable to the structure, to the operation of the electrical equipment and to its installation, and who has received safety training in order to recognize and avoid the risks involved.

Personnel qualification

Only personnel with suitable training and an in-depth knowledge and understanding of the contents of this manual and any other documentation relevant to the product are authorized to work on and with this product. Qualified personnel must be capable of identifying any dangers which may arise from the parameterization or changing of parameter values, and from the use of mechanical, electric and electronic equipment in general. Plus, they must be familiar with the personal safety laws, provisions and regulations which must be observed during system planning and implementation.

Permitted use

This device is designed to control remote counters and cold rooms with pulse electronic expansion valve (EEV) in single or dual evaporator configuration.

The device must be installed and used in accordance with the provided instructions and in particular, in normal conditions, dangerous energized parts must not be accessible.

The device should be suitably protected from water and dust. Access to the various product parts from the front should involve the use of a keyed or tooled locking mechanism.

The device is suited for integration into equipment for commercial use and/or similar for refrigeration purposes and has been verified ed on the basis of the harmonized European standards of reference.

Only use the product with the specified cables and accessories. Only use genuine accessories and spare parts.

Prohibited use

Any use other than that indicated in the above paragraph "Permitted use" is strictly prohibited.

The relay contacts supplied are electromechanical and are subject to wear. The functional safety protection devices, specified by international or local laws, must be installed outside this device.

Liability and residual risks

The liability of Schneider Electric and Eliwell is limited to the correct and professional use of the product according to the directives referred to herein and in the other supporting documents, and does not cover any damage (including but not limited to) the following causes:

- unspecified installation/use and, in particular, in contravention of the safety requirements of the legislation in force in the country of installation and/or specified in this document;
- use on equipment which does not provide adequate protection against electrocution, water and dust in the actual installation conditions;
- use on devices which allow access to dangerous parts without the aid of tools and/or which do not have a keyed locking mechanism;
- product tampering and/or alteration;
- installation/use on equipment that does not comply with the regulations in force in the country of installation.

Disposal



The equipment (or product) must be subjected to separate waste collection in compliance with local legislation regarding waste disposal.

About the book

Document Scope

This document describes the devices **RTX 600 /V** used to control remote counters and cold rooms with pulse electronic expansion valve (EEV) management in single or dual evaporator configuration, including information relating to installation and wiring.

Use this document to:

- Install and use your device
- Familiarize yourself with the functions of the device

Note: read this document and all related documents carefully before installing, operating or servicing the device.

Validity Note

The technical characteristics of the devices described in the present document also appear online.

To access the information online, go to the Eliwell home page: *www.eliwell.com*.

Related documents

Publication title	Reference document code
Instruction Sheet RTX 600 /V DOMINO ZERO	9IS24738 (EN-IT)

You can download these technical publications and other technical information from our website at www.eliwell.com.

Product related information

⚠ ⚠ DANGER

HAZARD OF ELECTRIC SHOCK, EXPLOSION, FIRE OR ARC FLASH

- Disconnect all power from all equipment including connected devices prior to removing any covers or doors, or installing or removing any accessories, hardware, cables or wires.
- Always use a properly rated voltage sensing device to confirm the power is off where and when indicated.
- Before restoring the power supply, replace and secure all covers, hardware components and cables.
- For all the devices requiring it, make sure there is an effective ground connection.
- Use only the specified voltage when operating this device and any associated products.
- Use appropriate safety interlocks where personnel and/or equipment hazards exist.
- Install and operate this equipment in an enclosure appropriately rated for its intended environment and secured by a keyed or tooled locking mechanism.
- Do not use this equipment for safety-critical functions.
- Do not disassemble, repair, or modify this equipment.
- Do not connect the device directly to the line voltage, unless expressly indicated.

Failure to follow these instructions will result in death or serious injury.

⚠ ⚠ DANGER

LOOSE WIRING CAN RESULT IN ELECTRIC SHOCK AND/OR FIRE

- Tighten the connections in compliance with the technical specifications for torque values and make sure the wiring is correct.
- Do not insert more than one cable per terminal board connector unless you are using the ends of the cables (terminals).

Failure to follow these instructions will result in death or serious injury.

⚠ WARNING

HAZARD OF OVERHEATING AND/OR FIRE

- Do not use with loads other than those indicated in the technical data.
- Do not exceed the maximum permitted current; in the case of higher loads, use a contactor with suitable power.
- Verify that your application has not been designed with device outputs connected directly to devices generating a frequently activated capacitive load (1).
- Power lines and output connections must be suitably wired and protected by means of fuses when required by national and local regulations.
- Connect the relay outputs, including the shared pole, using wires with a cross-section of at least 2.0 mm^2 (AWG 14), with a nominal temperature value of at least 80 °C (176 °F).

Failure to follow these instructions can result in death, serious injury, or equipment damage.

(1) Even if the application does not apply a frequently activated capacitive load to the relay, capacitive loads reduce the life of any electromechanical relay and the installation of a contactor or external relay, sized and maintained according to the ratings and characteristics of the capacitive load, helps to minimize the consequences of relay degradation.

⚠ WARNING

LOSS OF CONTROL

- The system designer must consider the potential failure modes of the control circuit and, for some critical control functions, provide a means for reaching a safe condition during and after a circuit failure. Examples of critical control functions are the emergency stop and end of travel stop, power supply cut-off and restart.
- Separate or redundant control circuits must be provided for critical control functions.
- The system control circuits can include communication connections. Keep in mind the implications of transmission delays or sudden connection failures.
- Comply with all standards regarding accident prevention and local applicable safety directives.
- Every implementation of this equipment must be tested individually and completely in order to verify its proper operation before it is commissioned.

Failure to follow these instructions can result in death, serious injury, or equipment damage.

⚠ WARNING

UNINTENDED EQUIPMENT OPERATION

- Use shielded wires for all analog I/O and communication signals.
- Ground the wire shields for all analog I/O and communication signals in a single point (1).
- The signal cables (probes, digital inputs, communication, and relative power supplies) must be laid separately from the device power cables.
- Reduce the length of the wires and cables as much as possible and avoid winding them around electrically connected parts.

Failure to follow these instructions can result in death, serious injury, or equipment damage.

(1) Grounding in several points is permitted if the connections are made to an equipotential ground surface that is sized to avoid damage to the cable shields in the event of a short circuit in the power supply.

When handling the equipment, take care to avoid damage caused by electrostatic discharge. In particular, the unshielded connectors are extremely vulnerable to electrostatic discharge.

⚠ WARNING

UNINTENDED EQUIPMENT OPERATION DUE TO ELECTROSTATIC DISCHARGE

- Keep the equipment in the protective packaging until ready for installation.
- The device must only be installed in type-approved cupboards and/or in points that prevent unauthorized access and provide protection from electrostatic discharge.
- When handling sensitive equipment, use a grounded device protecting against electrostatic discharge.
- Before handling the equipment, always discharge the static electricity from the body by touching an earthed surface or type-approved antistatic mat.

Failure to follow these instructions can result in death, serious injury, or equipment damage.

The procedure for loading one of the preset applications restores the original factory values, i.e. the default values shown in the parameters table, except for the parameters that are not present within the preset applications **AP1**...**AP8** which retain the value set previously. These values, left unaltered, may not be suitable and may therefore need to be changed.

NOTICE

INOPERABLE DEVICE

Verify the parameters after loading a preset application.

Failure to follow these instructions can result in equipment damage.

Flammable refrigerant gases

This equipment is designed to operate in non-hazardous areas and where applications which generate - or could potentially generate - hazardous atmospheres have been isolated. Install this equipment only in areas and with applications known to be constantly free from hazardous atmospheres.

⚠ DANGER

HAZARD OF EXPLOSION

- Install and use this equipment in non-hazardous locations only.
- Do not install or use this equipment in applications which could generate hazardous atmospheres, such as those using flammable refrigerants.

Failure to follow these instructions will result in death or serious injury.

For information regarding the use of control equipment in applications capable of generating hazardous materials, please contact the regulatory office or the local, regional or national certification authority.

Overview of the range

Contents

This section includes the following topics:

Introduction 15
Box contents 15
Models 16
Main features 16
Main components 18
Accessories 19
List of valves 20

Introduction

General Description

The **RTX 600 /V** family consists of devices used to control remote counters and cold rooms with pulse electronic expansion valve (EEV) management in single or dual evaporator configuration.

The devices are available in a DIN rail-mounted version.

Every device has 8 preset applications: **AP1**...**AP8**, that pre-configure the device to work with 8 real usage situations, reducing installation time and only requiring precision changes to parameters.

Main features

The main features are as follows:

- Evaporator superheat regulation via an integrated driver
- 2 ON/OFF regulators for HEAT/COOL
- Single and dual evaporator defrost (heaters, inversion cycle, hot gas)
- Evaporator fans
- Anti-sweater heaters (Frame heater)
- AUX
- Light
- Door switch
- ON / OFF
- Deep cooling cycle
- Dynamic setpoint
- Day / Night
- Diagnostics
- Preset applications
- Configurable inputs/outputs
- Link2 local network
- Modbus communication protocol via RS485
- Compatibility with Device Manager (DM)
- Compatibility with UNICARD and Multi Function Key (MFK)

In this manual, the photographs and diagrams are provided to illustrate the device (and other Eliwell devices) and are purely illustrative. The corresponding dimensions and proportions may not correspond to actual dimensions in terms of life-size or scale. Furthermore, all the wiring or electrical diagrams should be considered as simplified representations which may not exactly correspond to the reality.

Box contents

The figure below shows the contents of the box:

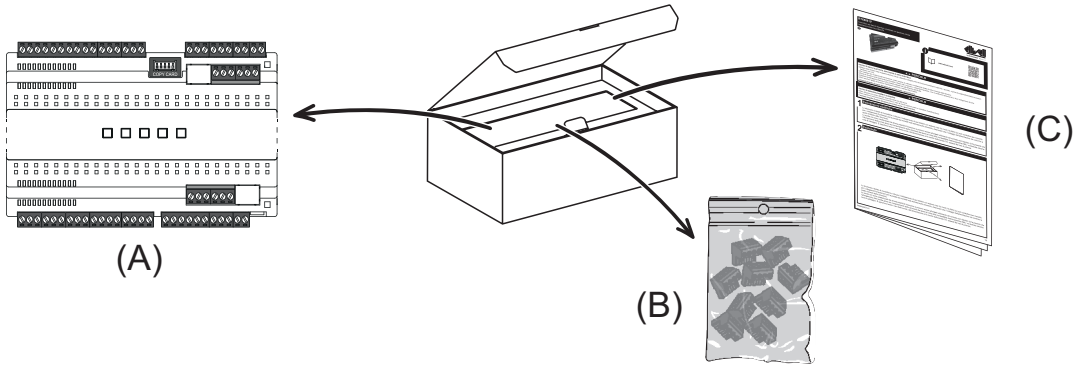

The box contains:

Label	Description
A	Device
B	Removable screw terminals
C	Instruction sheet

Models

Image	Description
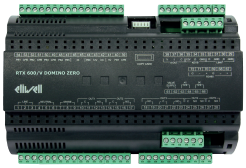	RTX 600 /V DOMINO ZERO
	RTX 600 /V DOMINO ZERO + KDEPlus

Main features

The devices are available in a DIN rail-mounted version.

The figure below shows a connection example for the device:

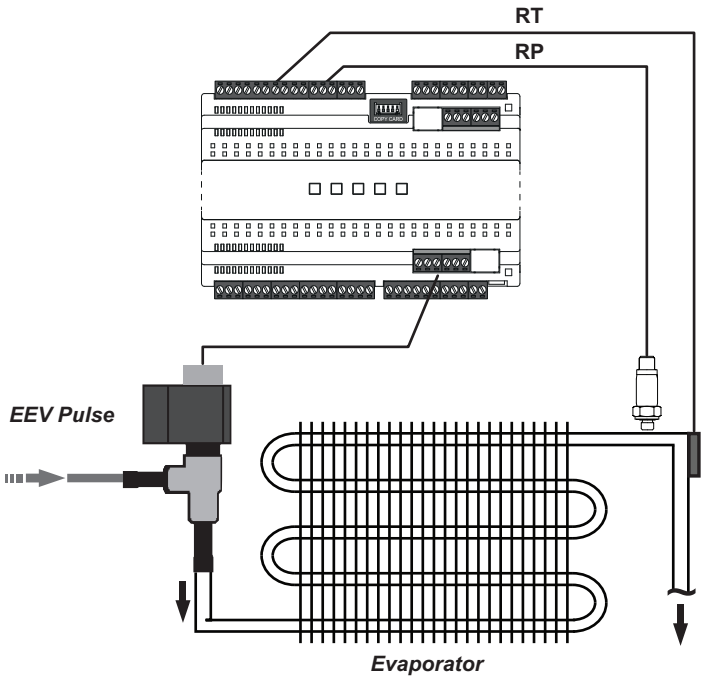

Legend: **RT** = Refrigerant Temperature; **RP** = Refrigerant Pressure; **EEV Pulse** = Pulse Valve; **Evaporator** = Evaporator.

The device range consists of a base board and a top board:

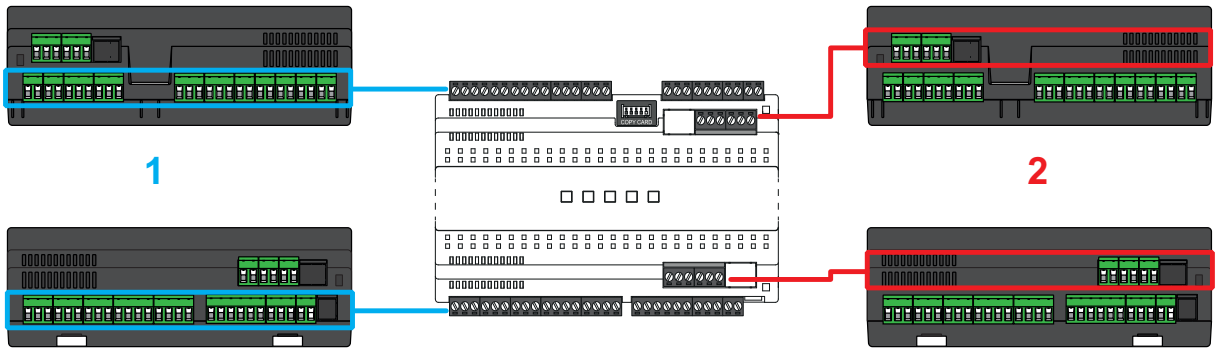

Legend: **1** = Main Board; **2** = Upper Card.

The table below shows the main features of the device:

Characteristics	Description
Power supply	SMPS 100...240 Vac (±10%), 50/60 Hz
Input type	• 5 configurable NTC/PTC/Pt1000/DI inputs (Pb1...Pb5) • 1 configurable 4...20 mA / DI input (Pb6) • 1 configurable ratiometric / DI input (Pb7) • 1 multifunctional voltage free digital input (DI)
Output type	• 5 relay digital outputs • 1 multifunctional OC (Open Collector) output • 1 multifunctional DAC output (0...10 Vdc / 4...20 mA) • 1 pulse EEV driver output on SSR relay with maximum current of 300 mA
Display	NO
Nut	YES
Communication port	• 1 TTL for UNICARD / Device Manager connection (via DMI) / Multi Function Key (maximum length 3 m / 9.84 ft.) • 1 opto-isolated RS485 serial port for supervision • 1 serial port for local Link2 network connection • 1 serial port for terminal (KDEPlus, KDWPlus, KDT or KDX) or viewer (ECPlus) connection

Main components

The main components of the device are:

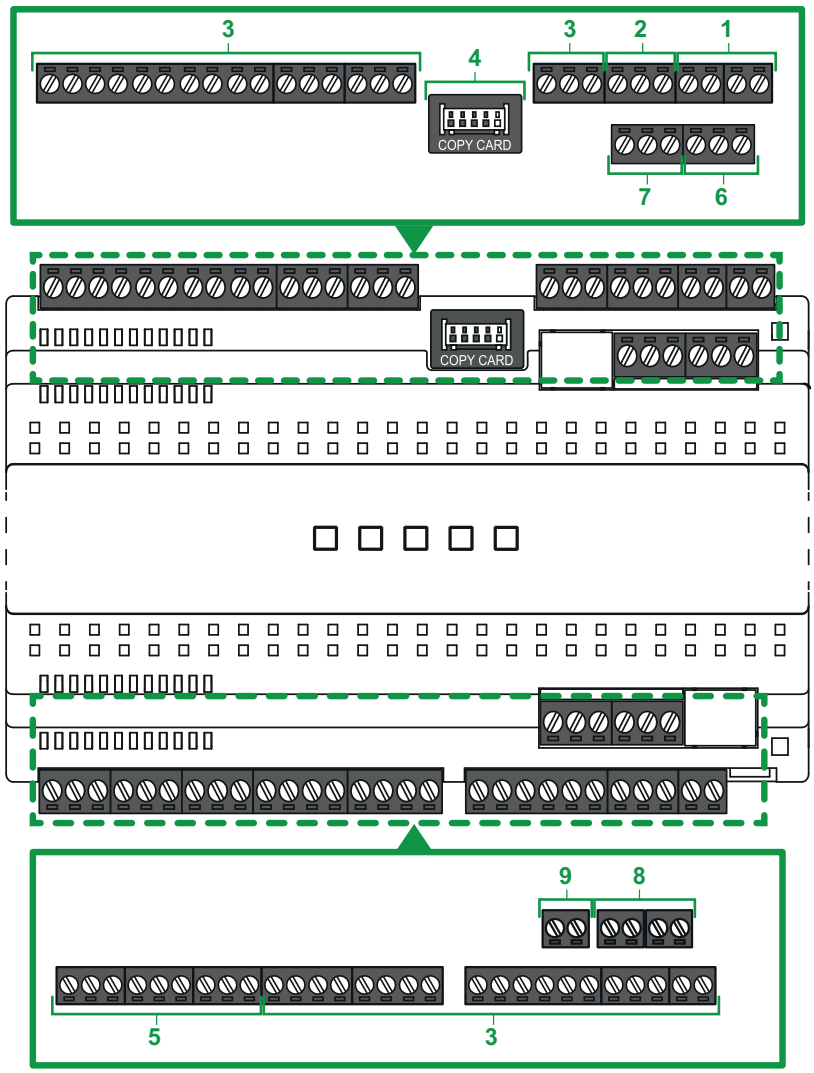

NOTE: in the figure the device has removable screw terminals fitted.

Label	Description	Position	For further information, please refer to:
1	Link2	Base board	Serial connections and Serial ports
2	Terminal	Base board	Serial ports
3	Inputs/Outputs	Base board	Base board wiring diagrams
4	TTL	Base board	Serial ports
5	Power supply	Base board	Power supply
6	RS485-1 port	Top board	Serial connections and Serial ports
7	RS485-2 port	Top board	Serial connections and Serial ports
8	Pulse EEV power supply	Top board	Pulse EEV power supply
9	Pulse EEV output	Top board	Top board wiring diagram

Accessories

⚠ ⚠ DANGER

HAZARD OF ELECTRIC SHOCK, FIRE OR ARC FLASH

Only connect compatible accessories to the instrument.

Failure to follow these instructions will result in death or serious injury.

Contact an Eliwell representative for further information regarding the accessories that can be used.

Accessory	Description
	KDX 500/5000
	KDEPlus
	KDWPlus
	Vertical KDT
	Horizontal KDT
	ECPlus
	Multi Function Key (MFK)
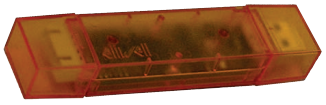	UNICARD USB/TTL EXTENSION CABLE USB-A/A NETWORK POWER SUPPLY USB
	NTC, PTC, Pt1000

Accessory	Description
	PRESSURE TRANSDUCER (EWPA)
	RATIOMETRIC TRANSDUCER (EWPA)
	Pulse electronic expansion valves (EEV) **PXV** (with 0.5 to 2.7 mm orifices)

List of valves

Below is the list of electronic expansion valves (EEV) compatible with the device:

⚠ WARNING

UNINTENDED EQUIPMENT OPERATION

Before using the valve, verify the parameters and the data provided by the valve manufacturer.

Failure to follow these instructions can result in death, serious injury, or equipment damage.

The following valves are **COMPATIBILE** with the device:

Manufacturer	Valve	Notes
Eliwell by Schneider Electric	PXV	Orifices from 0.5 to 2.7 mm

Preliminary configurations

Contents

This section includes the following topics:

Introduction 22
Available applications 23
Application AP1 24
Application AP2 25
Application AP3 26
Application AP4 27
Application AP5 28
Application AP6 29
Application AP7 30
Application AP8 31

Introduction

Overview

The **RTX 600 /V** family consists of devices used to control remote counters and cold rooms with pulse electronic expansion valve (EEV) management in single or dual evaporator configuration.

Every device has 8 preset applications: **AP1**...**AP8**, that pre-configure the device to work with 8 real usage situations, reducing installation time and only requiring precision changes to parameters.

Applications

Changing the controller operating parameters does not affect the preset application values. The first time the instrument is switched on, the operating parameters are the same (for value and visibility) as for application **AP1**.

Applications **AP1**...**AP8** cannot be edited from the instrument but only via Device Manager, a software program available to download from the www.eliwell.com website.

Switching on for the first time

Once the electrical connections have been completed, simply power up the device for it to start working.
At the first startup:

1. Select and load the preset application - **AP1**...**AP8** - that best reflects the usage requirements.
2. Verify and, if necessary, adjust the value of the main device parameters to adapt the selected application to your system.
3. Make sure there are no active alarms (see alarms section).

Loading Preset Applications

The procedure for loading one of the preset applications is:

1. Switch on the terminal connected to the device; press and hold SET until label "AP1" appears.

   Note: On the **KDT** terminal, within 30 seconds of switching the device on, press and hold any button for a least 1 second to unlock the terminal and then press and hold SET and ▼ simultaneously until label "AP1" appears.

   Note: On the **KDX** terminal, within 30 seconds of switching the device on, press SET and ESC simultaneously until label “AP1” appears.
2. Scroll through applications **AP1**...**AP8** using ▲ and ▼
3. Confirm the selected preset application using SET.
   Note: The process can be canceled by pressing ⏻ or letting a timeout occur (15 seconds)
4. If the procedure was completed successfully, the display will show "**yES**"; otherwise it will show "**Err**"
5. The device will restart and revert to showing the main display

The procedure for loading one of the preset applications restores the respective default values, with the exception of the parameters non specific to the application that retain the value set previously. These values, left unaltered, may not be suitable and may therefore need to be changed.

NOTICE
INOPERABLE DEVICE Verify the parameters after loading a preset application. **Failure to follow these instructions can result in equipment damage.**

Available applications

Description

Below is a short description of the preset applications:

- **AP1**: NT 'REFRIGERATED CABINETS' (0°C / 32°F) for the storage of Dairy products, Fruit/Vegetables and Frozen food.
- **AP2**: AT 'REFRIGERATED CABINETS' (3°C / 37.4°F) for the storage of Dairy products, Fruit/Vegetables and Frozen food.
- **AP3**: LT 'REFRIGERATED CABINETS' (-18°C / 0.4°F) for the storage of Frozen food.
- **AP4**: NT 'COLD ROOMS' (0°C / 32°F) for the storage of Dairy products, Fruit/Vegetables and Frozen food.
- **AP5**: AT 'COLD ROOMS' (3°C / 37.4°F) for the storage of Dairy products, Fruit/Vegetables and Frozen food.
- **AP6**: LT 'COLD ROOMS' (-18°C / 0.4°F) for the storage of Frozen food.
- **AP7**: LT 'HORIZONTAL ISLAND' (-18°C / 0.4°F) for the storage of Frozen food.
- **AP8**: LT 'COMBINED UPRIGHT REFRIGERATED CABINETS' (-18°C / 0.4°F) for the storage of Frozen food.

Summary

		AP1	AP2	AP3	AP4	AP5	AP6	AP7	AP8
INPUTS									
Pb1	NTC	**REG1**	**REG1**	**REG1**	**REG1**	**REG1**	**REG1**	**REG1**	**REG1**
Pb2	NTC								**REG2**
Pb3	NTC	-	-	-	-	-	-	-	
Pb4	NTC	-	-	-	-	-	-	-	-
Pb5	NTC	EEV	EEV	EEV	EEV	EEV	EEV	EEV	EEV
Pb6	4...20 mA	EEV	EEV	EEV	EEV	EEV	EEV	EEV	EEV
Pb7	Ratiometric	-	-	-	-	-	-	-	-
DI	Digital Input	-	-	-				-	-
OUTPUTS									
Out1	Relay								
Out2	Relay								
Out3	Relay								
Out4	Relay								
Out5	Relay	AUX	AUX	AUX	-	-	-	-	-
EEV	Output	EEV	EEV	EEV	EEV	EEV	EEV	EEV	EEV
A OUT	Output	-	-	-	-	-	-	-	-
OC	Output	-	-	-	-	-	-	-	-
INPUTS / OUTPUTS ONLY PRESENT ON KDX TERMINAL									
Pb8	4...20 mA	-	-	-	-	-	-	-	-
DI1	Digital Input	-	-	-	-	-	-	-	-
DI2	Digital Input	-	-	-	-	-	-	-	-
OUT4	Relay	-	-	-	-	-	-	-	-
OUT5	Relay	-	-	-	-	-	-	-	-

Legend:

REG1 = Regulator 1	**REG2** = Regulator 2
EEV = EEV input or output	**AUX** = Auxiliary output regulator
= Alarm regulator	= Defrost regulator
= Compressor regulator	= Fan regulator
= Door switch regulator	= Light regulator

Regulation

Regulator 1 (**REG1**) will be activated when the temperature exceeds the value T > SP1+dF1, and will be deactivated when T < SP1. For these applications, the regulation differential will work in relative mode.

Application AP1

Overview

The application is configured for NT '**REFRIGERATED CABINETS**' (0°C / 32°F) for the storage of Dairy products, Fruit/Vegetables and Frozen food. The set configuration is intended for:

REFRIGERATED CABINETS	APPLICATION DIAGRAM
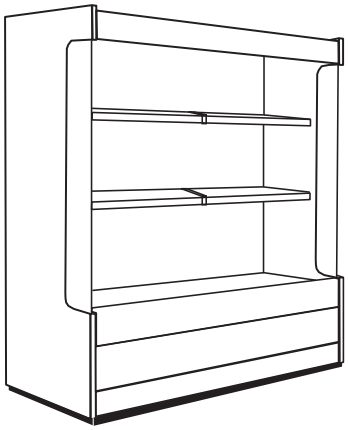	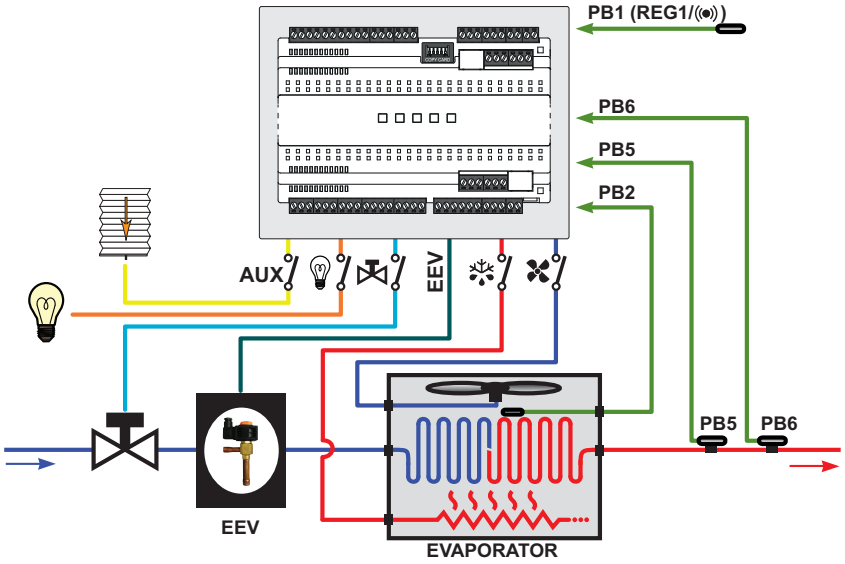

Legend: **REG1** = Regulator 1; **EEV** = Electronic expansion valve; **Evaporator** = Evaporator.

Application details

Input configuration:	• Pb1 input = Regulation 1 / Alarm • Pb2 input = Defrost / Evaporator fans • Pb3 input = Not set • Pb4 input = Not set • Pb5 input = EEV temperature sensor • Pb6 input = EEV pressure transducer • Pb7 input = Not set • DI input = Not set • Pb8 input (KDX) = Not set • DI1 input (KDX) = Not set • DI2 input (KDX) = Not set
Output configuration:	• OUT1 output (relay) = Compressor • OUT2 output (relay) = Evaporator fans • OUT3 output (relay) = Defrost • OUT4 output (relay) = Light • OUT5 output (relay) = AUX • EEV output = EEV valve • A OUT output = Not set • OC output = Not set • OUT4 output (KDX - relay) = Not set • OUT5 output (KDX - relay) = Not set

Application AP2

Overview

The application is configured for AT '**REFRIGERATED CABINETS**' (3°C / 37.4°F) for the storage of Dairy products, Fruit/Vegetables and Frozen food. The set configuration is intended for:

REFRIGERATED CABINETS	APPLICATION DIAGRAM
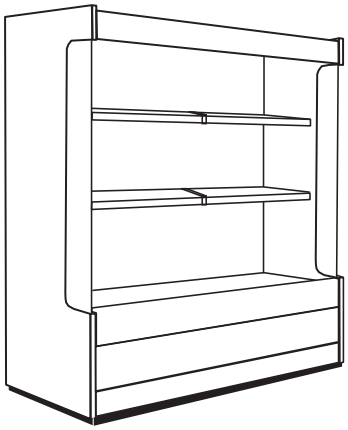	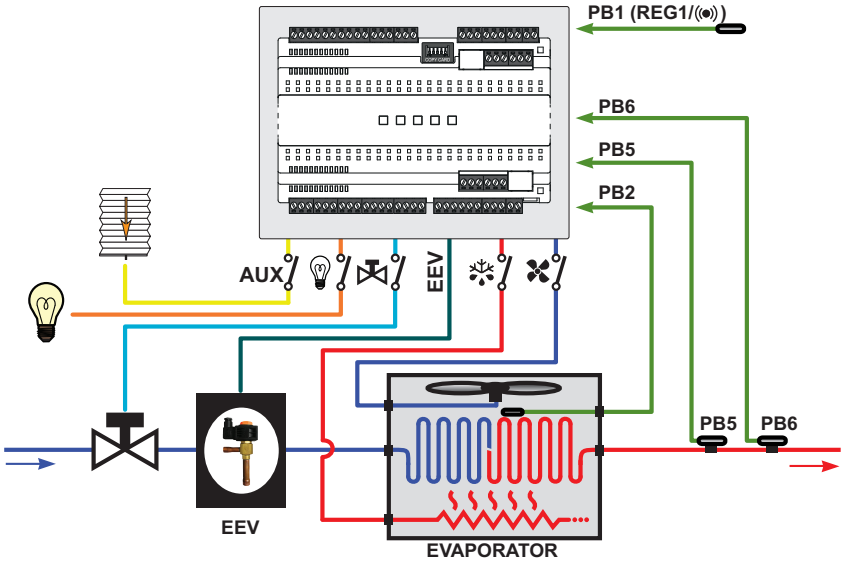

Legend: **REG1** = Regulator 1; **EEV** = Electronic expansion valve; **Evaporator** = Evaporator.

Application details

Input configuration:	• Pb1 input = Regulation 1 / Alarm • Pb2 input = Defrost / Evaporator fans • Pb3 input = Not set • Pb4 input = Not set • Pb5 input = EEV temperature sensor • Pb6 input = EEV pressure transducer • Pb7 input = Not set • DI input = Not set • Pb8 input (KDX) = Not set • DI1 input (KDX) = Not set • DI2 input (KDX) = Not set
Output configuration:	• OUT1 output (relay) = Compressor • OUT2 output (relay) = Evaporator fans • OUT3 output (relay) = Defrost • OUT4 output (relay) = Light • OUT5 output (relay) = AUX • EEV output = EEV valve • A OUT output = Not set • OC output = Not set • OUT4 output (KDX - relay) = Not set • OUT5 output (KDX - relay) = Not set

Application AP3

Overview

The application is configured for LT '**REFRIGERATED CABINETS**' (-18°C / 0.4°F) for the storage of Frozen food. The set configuration is intended for:

REFRIGERATED CABINETS	APPLICATION DIAGRAM
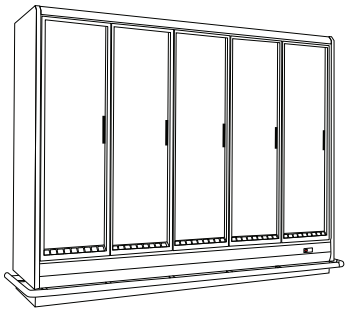	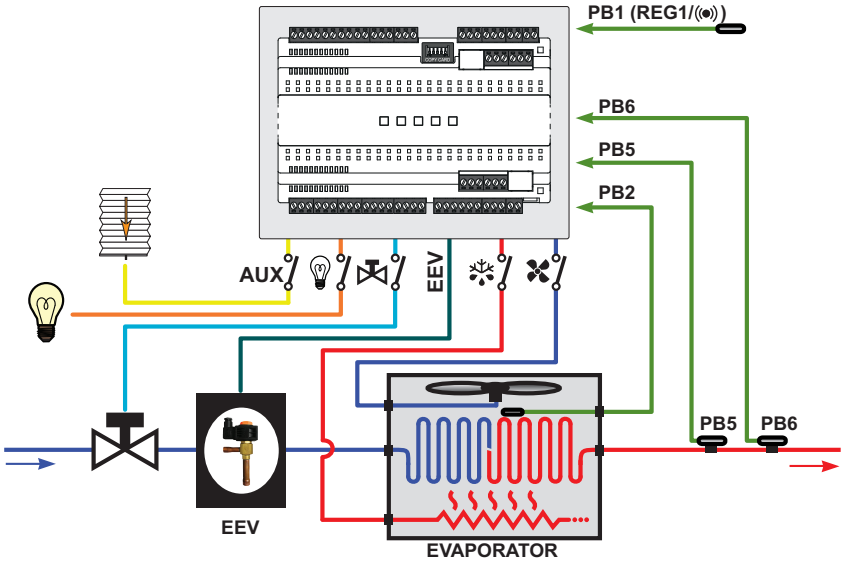

Legend: **REG1** = Regulator 1; **EEV** = Electronic expansion valve; **Evaporator** = Evaporator.

Application details

Input configuration:	• Pb1 input = Regulation 1 / Alarm • Pb2 input = Defrost / Evaporator fans • Pb3 input = Not set • Pb4 input = Not set • Pb5 input = EEV temperature sensor • Pb6 input = EEV pressure transducer • Pb7 input = Not set • DI input = Not set • Pb8 input (KDX) = Not set • DI1 input (KDX) = Not set • DI2 input (KDX) = Not set
Output configuration:	• OUT1 output (relay) = Compressor • OUT2 output (relay) = Evaporator fans • OUT3 output (relay) = Defrost • OUT4 output (relay) = Light • OUT5 output (relay) = AUX • EEV output = EEV valve • A OUT output = Not set • OC output = Not set • OUT4 output (KDX - relay) = Not set • OUT5 output (KDX - relay) = Not set

Application AP4

Overview

The application is configured for NT '**COLD ROOMS**' (0°C / 32°F) for the storage of Dairy products, Fruit/Vegetables and Frozen food. The set configuration is intended for:

COLD ROOMS	APPLICATION DIAGRAM
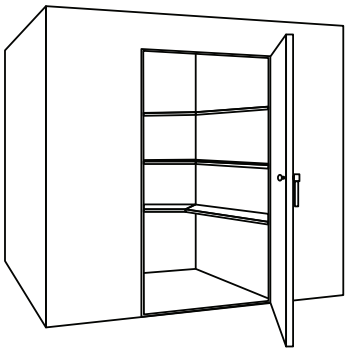	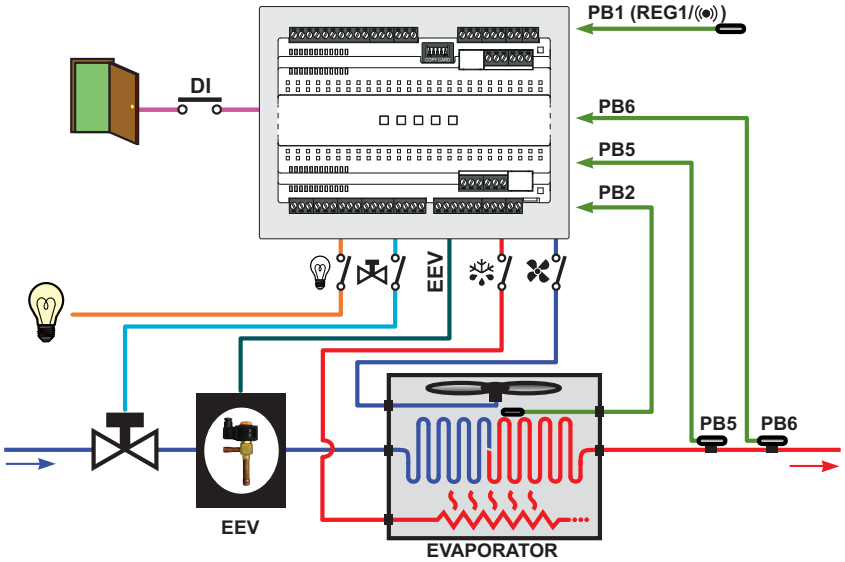

Legend: **REG1** = Regulator 1; **EEV** = Electronic expansion valve; **Evaporator** = Evaporator.

Application details

Input configuration:	• Pb1 input = Regulation 1 / Alarm • Pb2 input = Defrost / Evaporator fans • Pb3 input = Not set • Pb4 input = Not set • Pb5 input = EEV temperature sensor • Pb6 input = EEV pressure transducer • Pb7 input = Not set • DI input = Door switch • Pb8 input (KDX) = Not set • DI1 input (KDX) = Not set • DI2 input (KDX) = Not set
Output configuration:	• OUT1 output (relay) = Compressor • OUT2 output (relay) = Evaporator fans • OUT3 output (relay) = Defrost • OUT4 output (relay) = Light • OUT5 output (relay) = AUX • EEV output = EEV valve • A OUT output = Not set • OC output = Not set • OUT4 output (KDX - relay) = Not set • OUT5 output (KDX - relay) = Not set

Application AP5

Overview

The application is configured for AT '**COLD ROOMS**' (3°C / 37.4°F) for the storage of Dairy products, Fruit/Vegetables and Frozen food. The set configuration is intended for:

COLD ROOMS	APPLICATION DIAGRAM
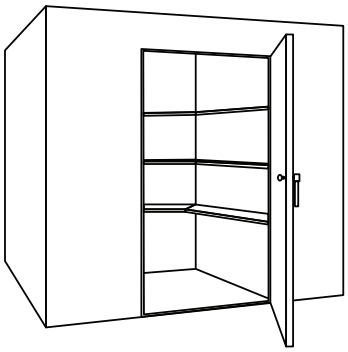	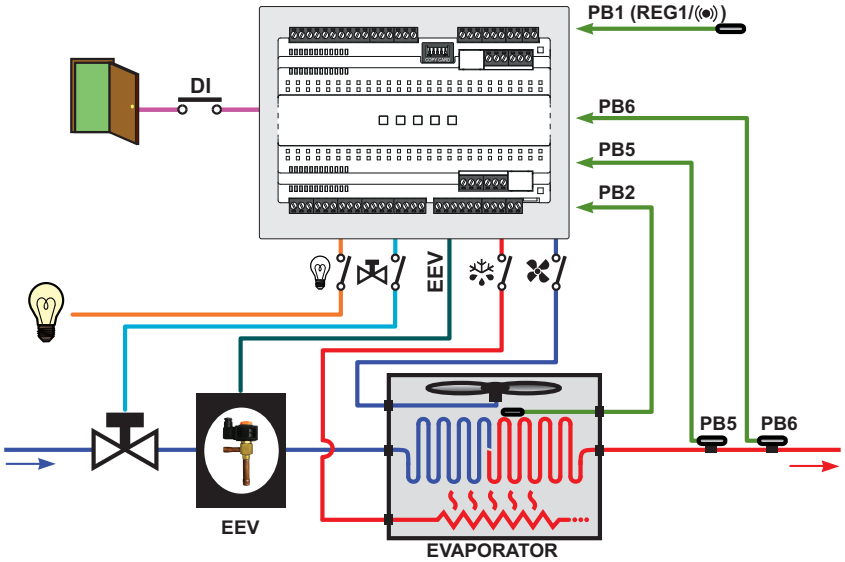

Legend: **REG1** = Regulator 1; **EEV** = Electronic expansion valve; **Evaporator** = Evaporator.

Application details

Input configuration:	• Pb1 input = Regulation 1 / Alarm • Pb2 input = Defrost / Evaporator fans • Pb3 input = Not set • Pb4 input = Not set • Pb5 input = EEV temperature sensor • Pb6 input = EEV pressure transducer • Pb7 input = Not set • DI input = Door switch • Pb8 input (KDX) = Not set • DI1 input (KDX) = Not set • DI2 input (KDX) = Not set
Output configuration:	• OUT1 output (relay) = Compressor • OUT2 output (relay) = Evaporator fans • OUT3 output (relay) = Defrost • OUT4 output (relay) = Light • OUT5 output (relay) = AUX • EEV output = EEV valve • A OUT output = Not set • OC output = Not set • OUT4 output (KDX - relay) = Not set • OUT5 output (KDX - relay) = Not set

Application AP6

Overview

The application is configured for LT '**COLD ROOMS**' (-18°C / 0.4°F) for the storage of Frozen food. The set configuration is intended for:

COLD ROOMS	APPLICATION DIAGRAM
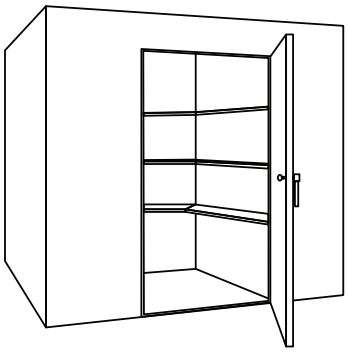	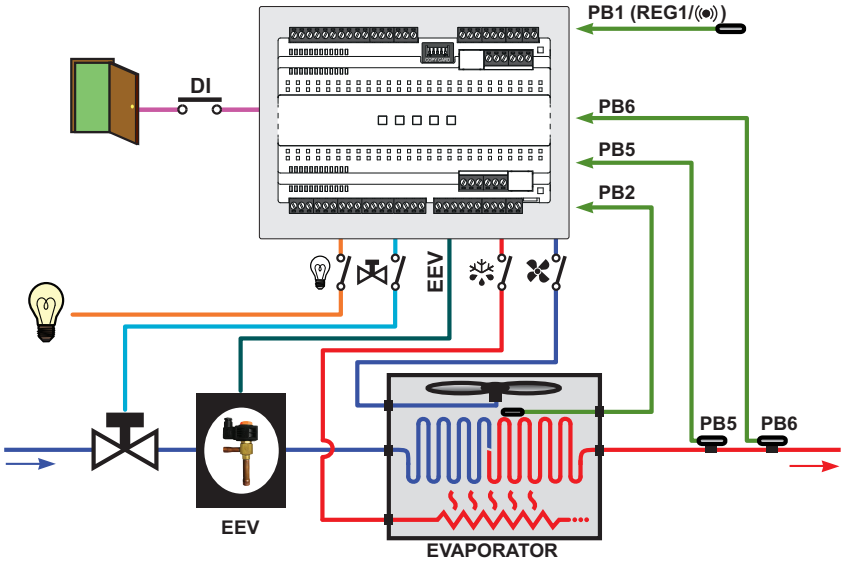

Legend: **REG1** = Regulator 1; **EEV** = Electronic expansion valve; **Evaporator** = Evaporator.

Application details

Input configuration:	• Pb1 input = Regulation 1 / Alarm • Pb2 input = Defrost / Evaporator fans • Pb3 input = Not set • Pb4 input = Not set • Pb5 input = EEV temperature sensor • Pb6 input = EEV pressure transducer • Pb7 input = Not set • DI input = Door switch • Pb8 input (KDX) = Not set • DI1 input (KDX) = Not set • DI2 input (KDX) = Not set
Output configuration:	• OUT1 output (relay) = Compressor • OUT2 output (relay) = Evaporator fans • OUT3 output (relay) = Defrost • OUT4 output (relay) = Light • OUT5 output (relay) = AUX • EEV output = EEV valve • A OUT output = Not set • OC output = Not set • OUT4 output (KDX - relay) = Not set • OUT5 output (KDX - relay) = Not set

Application AP7

Overview

The application is configured for LT '**HORIZONTAL ISLAND**' (-18°C / 0.4°F) for the storage of Frozen food. The set configuration is intended for:

HORIZONTAL ISLANDS	APPLICATION DIAGRAM
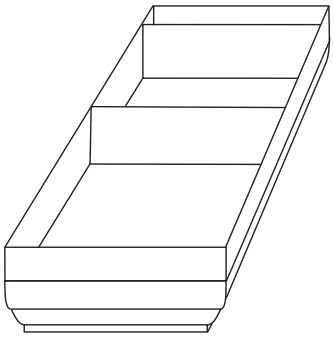	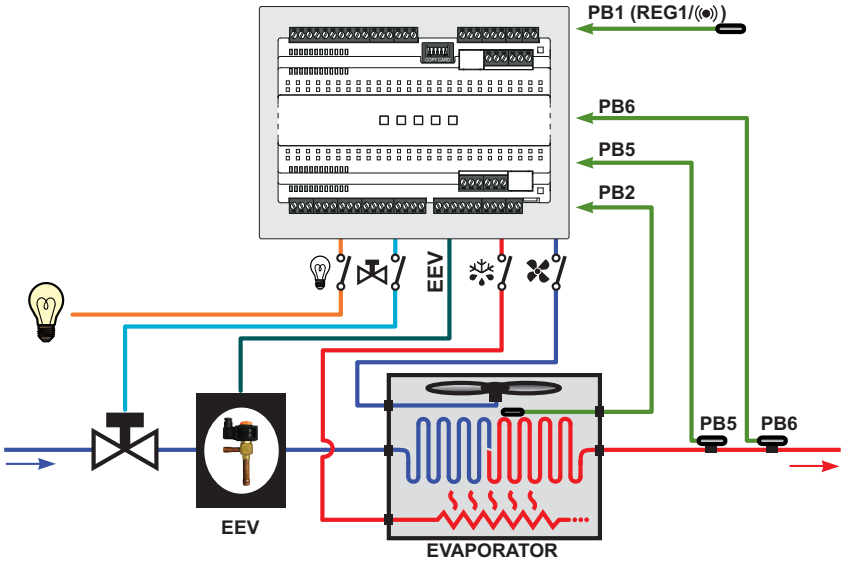

Legend: **REG1** = Regulator 1; **EEV** = Electronic expansion valve; **Evaporator** = Evaporator.

Application details

Input configuration:	• Pb1 input = Regulation 1 / Alarm • Pb2 input = Defrost / Evaporator fans • Pb3 input = Not set • Pb4 input = Not set • Pb5 input = EEV temperature sensor • Pb6 input = EEV pressure transducer • Pb7 input = Not set • DI input = Not set • Pb8 input (KDX) = Not set • DI1 input (KDX) = Not set • DI2 input (KDX) = Not set
Output configuration:	• OUT1 output (relay) = Compressor • OUT2 output (relay) = Evaporator fans • OUT3 output (relay) = Defrost • OUT4 output (relay) = Light • OUT5 output (relay) = AUX • EEV output = EEV valve • A OUT output = Not set • OC output = Not set • OUT4 output (KDX - relay) = Not set • OUT5 output (KDX - relay) = Not set

Application AP8

Overview

The application is configured for LT '**COMBINED UPRIGHT REFRIGERATED CABINETS**' (-18°C / 0.4°F) for the storage of Frozen food. The set configuration is intended for:

COMBINED REFRIGERATED CABINETS	APPLICATION DIAGRAM
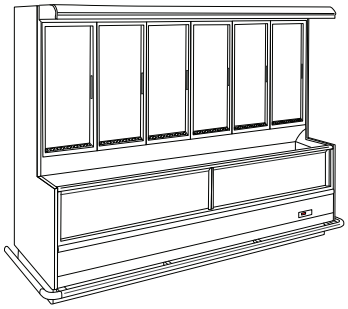	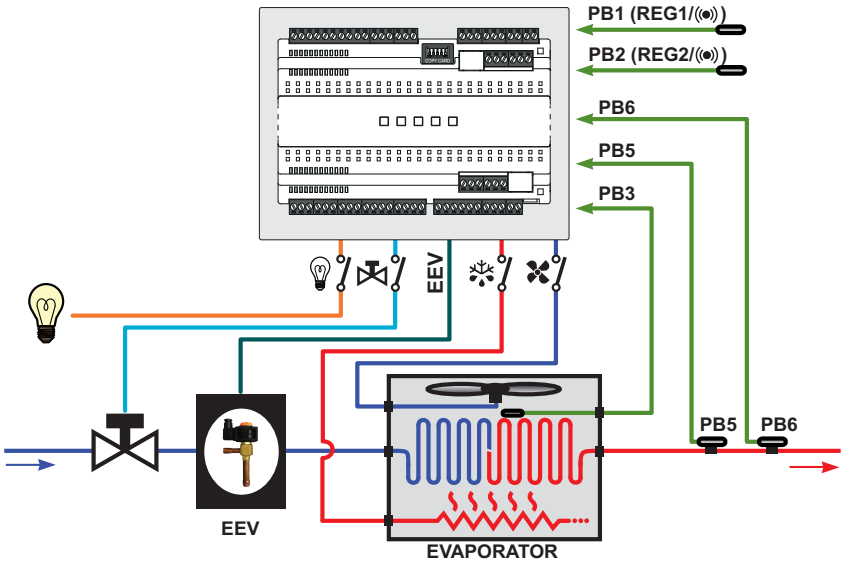

Legend: **REG1/2** = Regulator 1/2; **EEV** = Electronic expansion valve; **Evaporator** = Evaporator.

Application details

Input configuration:	• Pb1 input = Regulation 1 / Alarm • Pb2 input = Defrost / Evaporator fans • Pb3 input = Not set • Pb4 input = Not set • Pb5 input = EEV temperature sensor • Pb6 input = EEV pressure transducer • Pb7 input = Not set • DI input = Not set • Pb8 input (KDX) = Not set • DI1 input (KDX) = Not set • DI2 input (KDX) = Not set
Output configuration:	• OUT1 output (relay) = Compressor • OUT2 output (relay) = Evaporator fans • OUT3 output (relay) = Defrost • OUT4 output (relay) = Light • OUT5 output (relay) = AUX • EEV output = EEV valve • A OUT output = Not set • OC output = Not set • OUT4 output (KDX - relay) = Not set • OUT5 output (KDX - relay) = Not set

Mechanical installation

Contents

This section includes the following topics:

Before starting 33
Power supply disconnection 33
Considerations concerning programming 33
Operating environment 34
Comments concerning installation 34
Installation 35

Before starting

Read this manual carefully before installing the device and its accessories.

In particular, ensure conformity with all safety indications, electrical requirements and current legislation for the machine or the process used with this equipment.

The use and application of information contained herein requires experience in the design and programming of automated control systems. Only the machine user, integrator or manufacturer will be aware of all the conditions and factors affecting installation, configuration, operation and maintenance of the machine or process and can therefore identify the associated equipment and corresponding safety interlocks and systems that can be used appropriately and efficiently. When selecting automation and control equipment, other equipment and connected software for a particular application, all local, regional and national standards and/or legislation must be taken into account.

⚠ WARNING

REGULATORY INCOMPATIBILITY

Make sure that all equipment used and systems designed comply with all applicable local, regional and national laws.

Failure to follow these instructions can result in death, serious injury, or equipment damage.

Power supply disconnection

Assemble and install all optional extras and modules before installing the control system on an assembly rail, panel door or other assembly surface.

Before dismantling the equipment, remove the control systems from the assembly rail, plate or panel.

⚠ ⚠ DANGER

HAZARD OF ELECTRIC SHOCK, EXPLOSION, FIRE OR ARC FLASH

- Disconnect all power from all equipment including connected devices prior to removing any covers or doors, or installing or removing any accessories, hardware, cables or wires.
- Always use a properly rated voltage sensing device to confirm the power is off where and when indicated.
- Before restoring the power supply, replace and secure all covers, hardware components and cables.
- For all the devices requiring it, make sure there is an effective ground connection.
- Use only the specified voltage when operating this device and any associated products.
- Use appropriate safety interlocks where personnel and/or equipment hazards exist.
- Install and operate this equipment in an enclosure appropriately rated for its intended environment and secured by a keyed or tooled locking mechanism.
- Do not use this equipment for safety-critical functions.
- Do not disassemble, repair, or modify this equipment.
- Do not connect the device directly to the line voltage, unless expressly indicated.

Failure to follow these instructions will result in death or serious injury.

Considerations concerning programming

The devices described in this manual are designed and tested using Eliwell programming, configuration and maintenance software.

Operating environment

This equipment is designed to operate in non-hazardous areas and where applications which generate - or could potentially generate - hazardous atmospheres have been isolated. Install this equipment only in areas and with applications known to be constantly free from hazardous atmospheres.

⚠ DANGER

HAZARD OF EXPLOSION

- Install and use this equipment in non-hazardous locations only.
- Do not install or use this equipment in applications which could generate hazardous atmospheres, such as those using flammable refrigerants.

Failure to follow these instructions will result in death or serious injury.

For information regarding the use of control equipment in applications capable of generating hazardous materials, please contact the regulatory office or the local, regional or national certification authority.

⚠ WARNING

UNINTENDED EQUIPMENT OPERATION

Install and use this equipment in compliance with the conditions described in the "Environmental and electrical characteristics" section of this document.

Failure to follow these instructions can result in death, serious injury, or equipment damage.

Comments concerning installation

Device

⚠ WARNING

UNINTENDED EQUIPMENT OPERATION

- Use appropriate safety interlocks where personnel and/or equipment hazards exist.
- Install and operate this equipment in an enclosure appropriately rated for its intended environment and secured by a keyed or tooled locking mechanism.
- Power line and output circuits must be wired and fused in compliance with local and national regulatory requirements for the rated current and voltage of the particular equipment.
- Do not use this equipment for safety-critical functions.
- Do not disassemble, repair, or modify this equipment.

Failure to follow these instructions can result in death, serious injury, or equipment damage.

For mechanical dimensions, refer to the **Mechanical Dimensions** section.

The Device is designed for DIN rail mounting.

Terminals and echo viewer

The end application must prevent access to hazardous live or moving parts through the hole used to mount the terminal (**KDEPlus**, **KDWPlus**, **KDT** or **KDX**) or the echo viewer (**ECPlus**) as the terminal and viewer do not offer protection from this scenario.

⚠ ⚠ DANGER

HAZARD OF ELECTRIC SHOCK OR ACCESS TO MOVING PARTS

Make sure the terminal or viewer is installed correctly.

Failure to follow these instructions will result in death or serious injury.

Mechanical dimensions

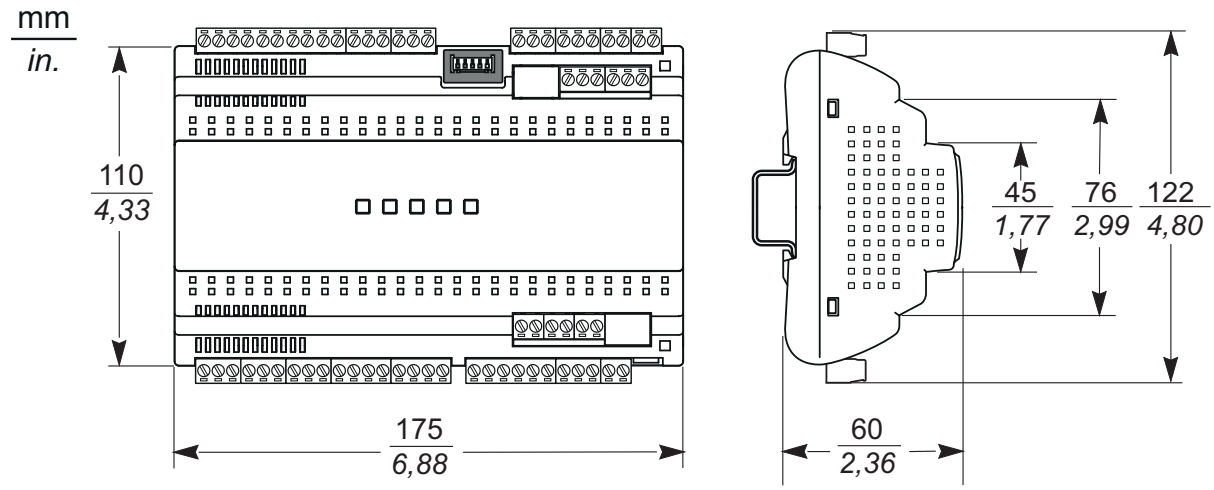

Installation

How to install the device

For installation, proceed as follows:

1. Shift the lower locking clip on the bottom part outwards, as shown in the diagram below (use a screwdriver or similar tool as a lever). Make sure the upper locking clip located on the top part remains fully in place
2. Fit the device onto the DIN rail
3. Press the clips inwards until you hear them click into place

Note: Once the device has been assembled on the DIN rail, make sure the spring docking devices are facing downwards.

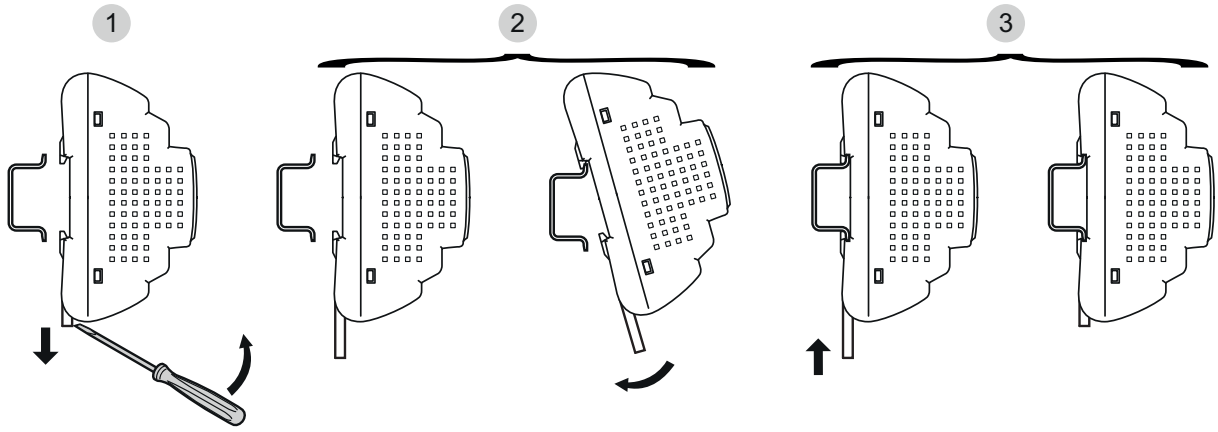

NSYSDR200
IEC/EN60715

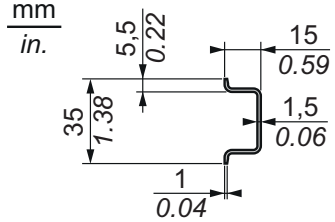

NSYSDR200BD

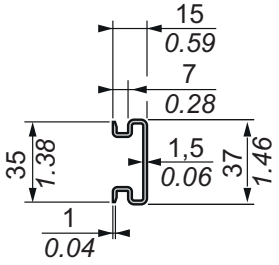

NSYSDR200T

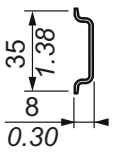



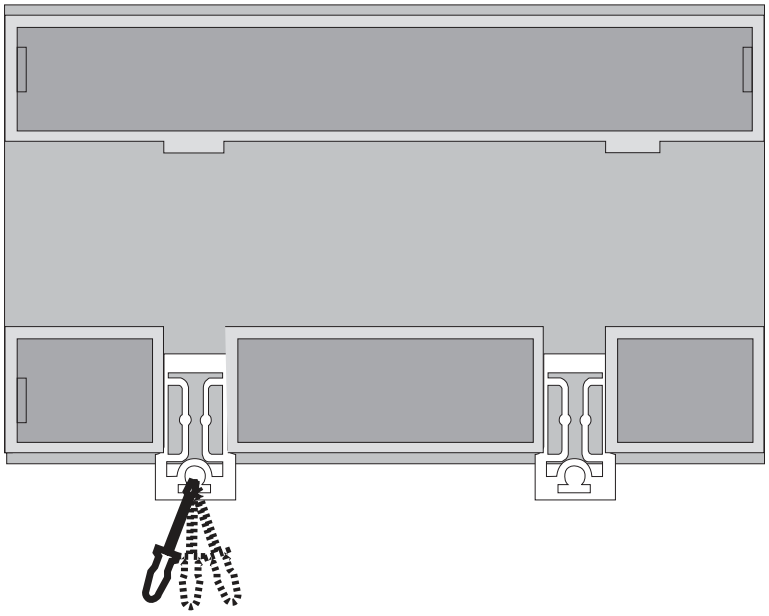

The device was designed as an IP20 product for installation in approved cabinets and/or in areas that prevent unauthorized access.

When installing the device, observe the following distances:

- The device and all sides of the cabinet (including the panel door)
- The device terminal blocks and the cable routing ducts. These distances reduce electromagnetic interference between the device and the cable routing ducts
- The device and other heat-generating devices installed in the same cabinet

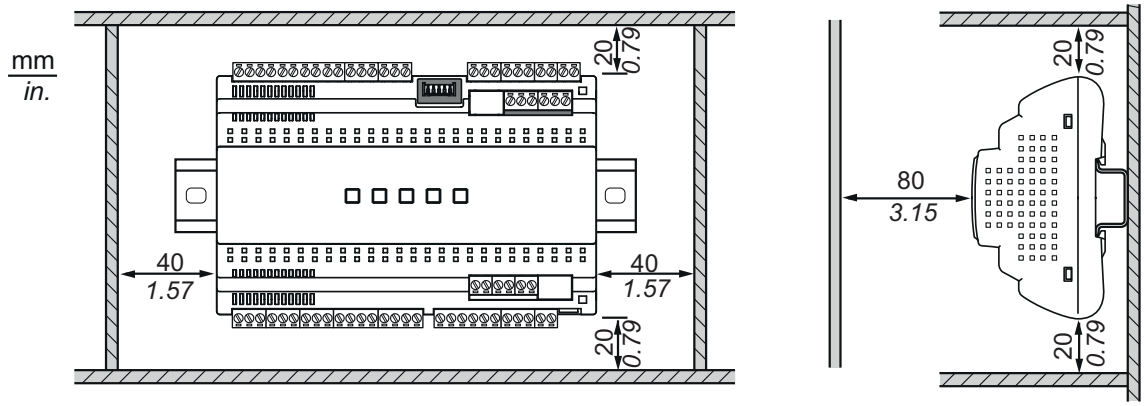

⚠ WARNING

UNINTENDED EQUIPMENT OPERATION

- Place the devices dissipating the most heat at the top of the cabinet and ensure suitable ventilation.
- Do not place the device near or above other devices that could cause superheat.
- Install the device in a point that guarantees the minimum distances from all structures and adjacent equipment as indicated in this document.
- Install all equipment in conformity with the technical specifications given in the corresponding documentation.

Failure to follow these instructions can result in death, serious injury, or equipment damage.

Electrical connections

Contents

This section includes the following topics:

Best wiring practices 38
Wiring guidelines 39
Serial connections 44
Connectors 45
Wiring diagrams 47

Best wiring practices

The following information describes wiring guidelines and the practices to observe when using the device.

⚠ ⚠ DANGER

HAZARD OF ELECTRIC SHOCK, EXPLOSION, FIRE OR ARC FLASH

- Disconnect all power from all equipment including connected devices prior to removing any covers or doors, or installing or removing any accessories, hardware, cables or wires.
- Always use a properly rated voltage sensing device to confirm the power is off where and when indicated.
- Before restoring the power supply, replace and secure all covers, hardware components and cables.
- For all the devices requiring it, make sure there is an effective ground connection.
- Use only the specified voltage when operating this device and any associated products.
- Use appropriate safety interlocks where personnel and/or equipment hazards exist.
- Install and operate this equipment in an enclosure appropriately rated for its intended environment and secured by a keyed or tooled locking mechanism.
- Do not use this equipment for safety-critical functions.
- Do not disassemble, repair, or modify this equipment.
- Do not connect the device directly to the line voltage, unless expressly indicated.

Failure to follow these instructions will result in death or serious injury.

The end application must prevent access to hazardous live or moving parts through the hole used to mount the terminal (**KDEPlus**, **KDWPlus**, **KDT** or **KDX**) or the viewer (**ECPlus**) as the terminal and viewer do not offer protection from this scenario.

⚠ ⚠ DANGER

HAZARD OF ELECTRIC SHOCK OR ACCESS TO MOVING PARTS

Make sure the terminal or viewer is installed correctly.

Failure to follow these instructions will result in death or serious injury.

⚠ WARNING

LOSS OF CONTROL

- The system designer must consider the potential failure modes of the control circuit and, for some critical control functions, provide a means for reaching a safe condition during and after a circuit failure. Examples of critical control functions are the emergency stop and end of travel stop, power supply cut-off and restart.
- Separate or redundant control circuits must be provided for critical control functions.
- The system control circuits can include communication connections. Keep in mind the implications of transmission delays or sudden connection failures.
- Comply with all standards regarding accident prevention and local applicable safety directives.
- Every implementation of this equipment must be tested individually and completely in order to verify its proper operation before it is commissioned.

Failure to follow these instructions can result in death, serious injury, or equipment damage.

Wiring guidelines

When wiring the device, the following standards must be observed:

- The I/O and communication wiring must be kept separate from the electrical wiring. These 2 types of wiring must be kept in separate raceways.
- Make sure that the operating conditions and surrounding environment comply with the specification values.
- Use wires of the correct diameter and suited to the voltage and current requirements.
- Use copper conductors (obligatory).
- Use twisted-pair shielded wires for analog I/Os.
- Use twisted-pair shielded wires for networks and field buses.

Use correctly earthed shielded wires for all analog inputs or outputs and communication connections. If shielded wires cannot be used for these connections, the electromagnetic interference may deteriorate the signal. Deteriorated signals can result in the devices, modules or attached equipment operating incorrectly.

⚠ WARNING

UNINTENDED EQUIPMENT OPERATION

- Use shielded wires for all analog I/O and communication signals.
- Ground the wire shields for all analog I/O and communication signals in a single point ([1]).
- The signal cables (probes, digital inputs, communication, and relative power supplies) must be laid separately from the device power cables.
- Reduce the length of the wires and cables as much as possible and avoid winding them around electrically connected parts.

Failure to follow these instructions can result in death, serious injury, or equipment damage.

([1]) Grounding in several points is permitted if the connections are made to an equipotential ground surface that is sized to avoid damage to the cable shields in the event of a short circuit in the power supply.

Note: Lay the main wiring (power wires) separately from the secondary wiring (very low voltage wire coming from intermediate power sources). Where this is not possible, double insulation is required in the form of cable recesses or raceways.

Rules for removable terminal blocks

⚠ ⚠ DANGER

LOOSE WIRING CAN RESULT IN ELECTRIC SHOCK AND/OR FIRE

- Tighten the connections in compliance with the technical specifications for torque values and make sure the wiring is correct.
- Do not insert more than one cable per terminal board connector unless you are using the ends of the cables (terminals).

Failure to follow these instructions will result in death or serious injury.

Use copper wires (obligatory).

The table below shows the type and size of permitted cables for removable screw terminals and the corresponding torque values:

mm / *in.* **7 / *0.28***								
mm²	0.2…2.5	0.2…2.5	0.25…2.5	0.25…2.5	2 x 0.2…1	2 x 0.2…1.5	2 x 0.25…1	2 x 0.5...1.5
AWG	*24…14*	*24…14*	*22...14*	*22...14*	*2 x 24…18*	*2 x 24…16*	*2 x 22…18*	*2 x 20...16*

Ø 3.5 mm (*0.14 in.*)	C	N•m	0.5...0.6
		lb-in	*4.42...5.31*

⚠ WARNING

HAZARD OF OVERHEATING AND/OR FIRE

- Power lines and output connections must be suitably wired and protected by means of fuses when required by national and local regulations.
- Use only the recommended wire cross-sections for the current capacity of the I/O channels and the electrical power.
- Connect the relay outputs, including the shared pole, using wires with a cross-section of at least 2.0 mm^2 (AWG 14), with a nominal temperature value of at least 80 °C (176 °F).

Failure to follow these instructions can result in death, serious injury, or equipment damage.

Protecting the outputs from damage from inductive loads

If the device has relay outputs, these types of outputs can cope with up to 240 Vac.

Damage from inductive loads to these types of outputs can cause the contacts to weld and lead to the loss of control. Each inductive load must include a protective device such as a peak limiter or a snubber. These relays do not support capacitive loads.

⚠ WARNING

RELAY OUTPUTS WELDED TO CLOSED POSITION

- Use a device or an external protection circuit suitable for all the relay outputs connected to alternating current inductive loads.
- Do not connect the relay outputs to capacitive loads.

Failure to follow these instructions can result in death, serious injury, or equipment damage.

Depending on the load a protection circuit may be required for device outputs and certain modules. Inductive load switching may create voltage impulses that damage, short-circuit or reduce the life of the output devices.

⚠ CAUTION

DAMAGE TO OUTPUT CIRCUITS DUE TO INDUCTIVE LOADS

Use an external protective device or circuit able to reduce the risks caused by voltage impulses in the switching of inductive loads.

Failure to follow these instructions can result in injury or equipment damage.

Choose a protection circuit from the following diagrams based on the electricity supply used. Connect the protection circuit outside the device or relay output module.

Two examples are given below:

Protection circuit A	Protection circuit B
This protection circuit uses a snubber and can be used for alternating current load circuits. The snubber must be compatible with the type of load and the RMS voltage of the snubber must be over that of the load by +10% (e.g. with a load running at 250 Vac, the snubber should have a minimum voltage of 275 Vac). 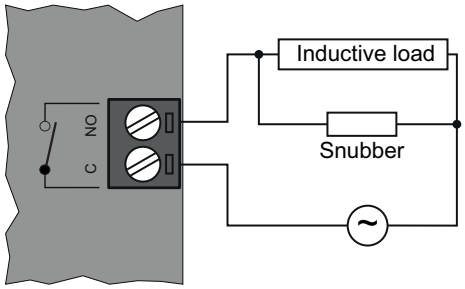	This protection circuit uses a varistor and can be used for alternating current load circuits. In applications in which the inductive load is frequently and/or rapidly switched on and off, verify that the maximum continuous energy (J) of the varistor is 20% or more higher than the peak load energy and that the clamping voltage of the varistor is not lower than 1.6 times the load voltage. 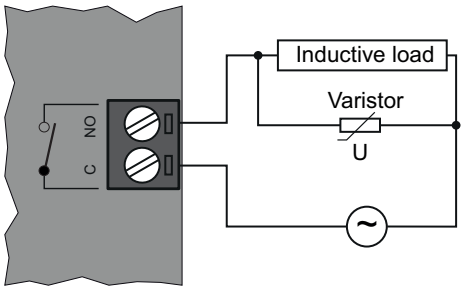

Note: Place the protection devices as close as possible to the load.

Specific considerations for handling

When handling the equipment, take care to avoid damage caused by electrostatic discharge. In particular, the unshielded connectors are extremely vulnerable to electrostatic discharge.

⚠ WARNING

UNINTENDED EQUIPMENT OPERATION DUE TO ELECTROSTATIC DISCHARGE

- Keep the equipment in the protective packaging until ready for installation.
- The device must only be installed in type-approved cupboards and/or in points that prevent unauthorized access and provide protection from electrostatic discharge.
- When handling sensitive equipment, use a grounded device protecting against electrostatic discharge.
- Before handling the equipment, always discharge the static electricity from the body by touching an earthed surface or type-approved antistatic mat.

Failure to follow these instructions can result in death, serious injury, or equipment damage.

Before use, make sure that the device is connected to a suitable external electricity supply (refer to section **Power supply** and **Auxiliary EEV power supply**).

Handling the analog inputs-probes

The temperature (NTC, PTC, Pt1000) probes have no connection polarity and can be extended using a normal bipolar cable. Extension of the probes has a significant impact on the device in terms of electromagnetic compatibility EMC: pay great attention to the wiring.

The ratiometric transducers (0...5 V) and pressure transducers (4...20 mA), have a connection polarity.

⚠ WARNING

UNINTENDED EQUIPMENT OPERATION

- Make sure that the device is powered when power is supplied to other connected devices with an external power supply.
- The signal cables (probes, digital inputs, communication, and relative power supplies) must be laid separately from the device power cables.

Failure to follow these instructions can result in death, serious injury, or equipment damage.

NOTICE

INOPERABLE DEVICE

Before switching on the power supply, verify all the wiring connections.

Failure to follow these instructions can result in equipment damage.

Handling the electronic expansion valve

Before connecting the valve, configure the device carefully.

⚠ WARNING

UNINTENDED EQUIPMENT OPERATION

- Make sure the correct valve model is selected.
- Before using the valve, verify the parameters and the data provided by the valve manufacturer.

Failure to follow these instructions can result in death, serious injury, or equipment damage.

Always cut off the equipment electricity supply before carrying out any maintenance work on the electrical connections.

For correct connection, observe the following:

- Separate the cables for the probes and the digital inputs from inductive loads and dangerous voltage connections to avoid electromagnetic interference. Avoid positioning probe cables near other electrical equipment (switches, contactors, etc.).
- Reduce the length of the connections as much as possible and avoid coiling them around electrically connected parts.

Serial connections

The device has the following serial communication ports:

- 1 opto-isolated RS485 serial port for supervision
- 1 serial port for local Link2 network connection
- 1 serial port for terminal (**KDEPlus**, **KDWPlus**, **KDT**, **KDX**) or **ECPlus** viewer connection

Verify the wiring when connecting the serial line. A connection error may cause incorrect operation or make the equipment unusable.

RS485 serial

- Use a special shielded "twisted-pair" cable for RS485 (e.g.: BELDEN cable, model 9842). When laying cables, follow the indications in standard EN 50174 for I.T. wiring. Take extra care to separate the data transmission circuits from the power lines.
- The length of the RS485 network, which can be connected directly to the device, is 1200 m (3937 ft) (in accordance with ANSI TIA/EIA RS-485-A and ISO 8482:1987 (E)).
- Modbus protocol allows management of up to 247 devices.
- Single terminal block with 3 wires: use all 3 wires (“+” and “-” for the signal; “G” for 0 V signal grounding).
- The network should have BUS DAISY CHAIN topology and termination resistance of 120 Ω - 1/4 W between terminals “+” and “-” at each of the two ends of the BUS or enable those already provided on the controllers.

Do not communicate over the RS485 serial port if the UNICARD/DMI/Multi Function Key is connected and vice-versa.

NOTICE
INOPERABLE DEVICE Only connect the RS485 serial port or the TTL (for UNICARD/DMI/Multi Function Key). **Failure to follow these instructions can result in equipment damage.**

Note: When the DMI is connected to the device, valve closure will be forced.

Link2 connection serial port

Use a special shielded "twisted-pair" cable for RS485 (e.g.: BELDEN cable, model 9842). When laying cables, follow the indications in standard EN 50174 for Information Tecnology wiring.

NOTE: A maximum of 8 devices can be connected to a Link2 network.

Terminal or echo viewer connection serial port

Use the cable supplied with the terminal (**KDEPlus**, **KDWPlus**, **KDT**, **KDX**) or viewer (**ECPlus**) for connection.

Where required, take extra care when cutting the 2 connectors for the cable supplied and when arranging the wires in sequence for subsequent connection to the device terminals.

Please refer to **Connections between the terminal and the viewer**.

Connectors

The device has a “Base board” and a “Top board”.

The I/O (Input/Output) and port labels are marked on the device nut.

Base board connectors

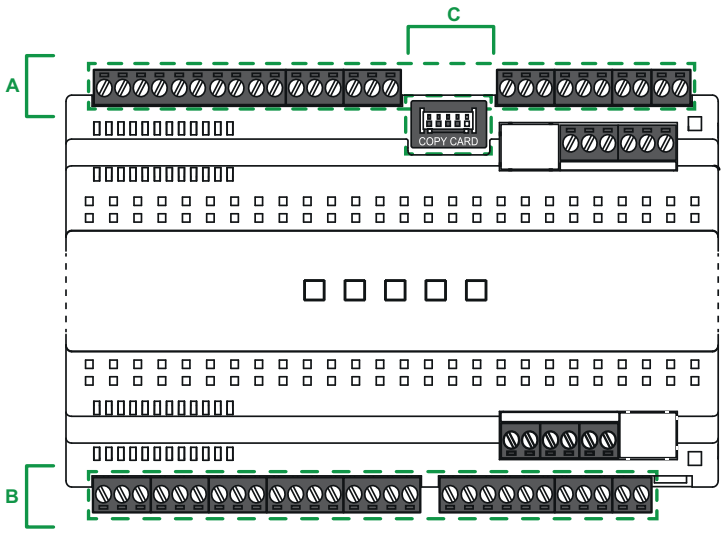

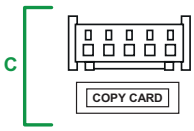

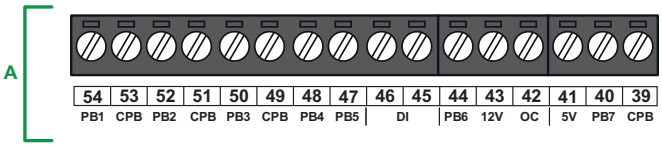

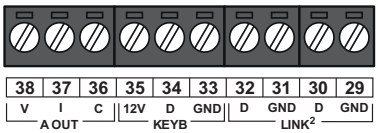

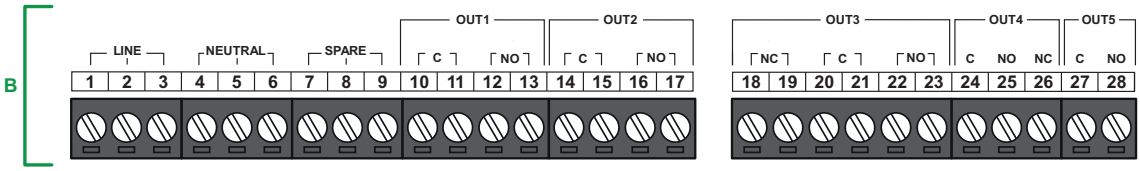

Top board connectors

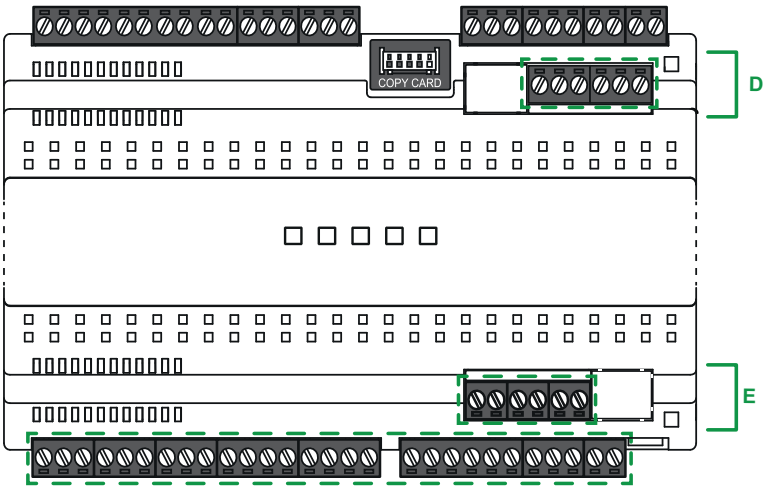

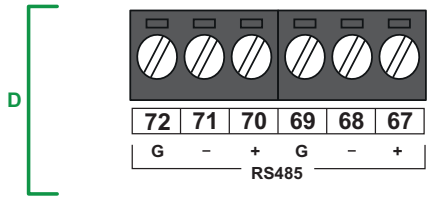

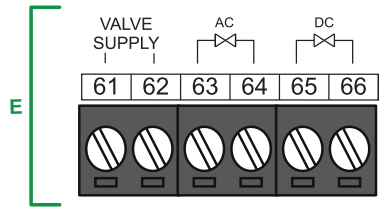

Wiring diagrams

Incorrect wiring causes irreversible damage to the device.

NOTICE
INOPERABLE DEVICE Before switching on the power supply, verify all the wiring connections. **Failure to follow these instructions can result in equipment damage.**

Base board wiring diagrams

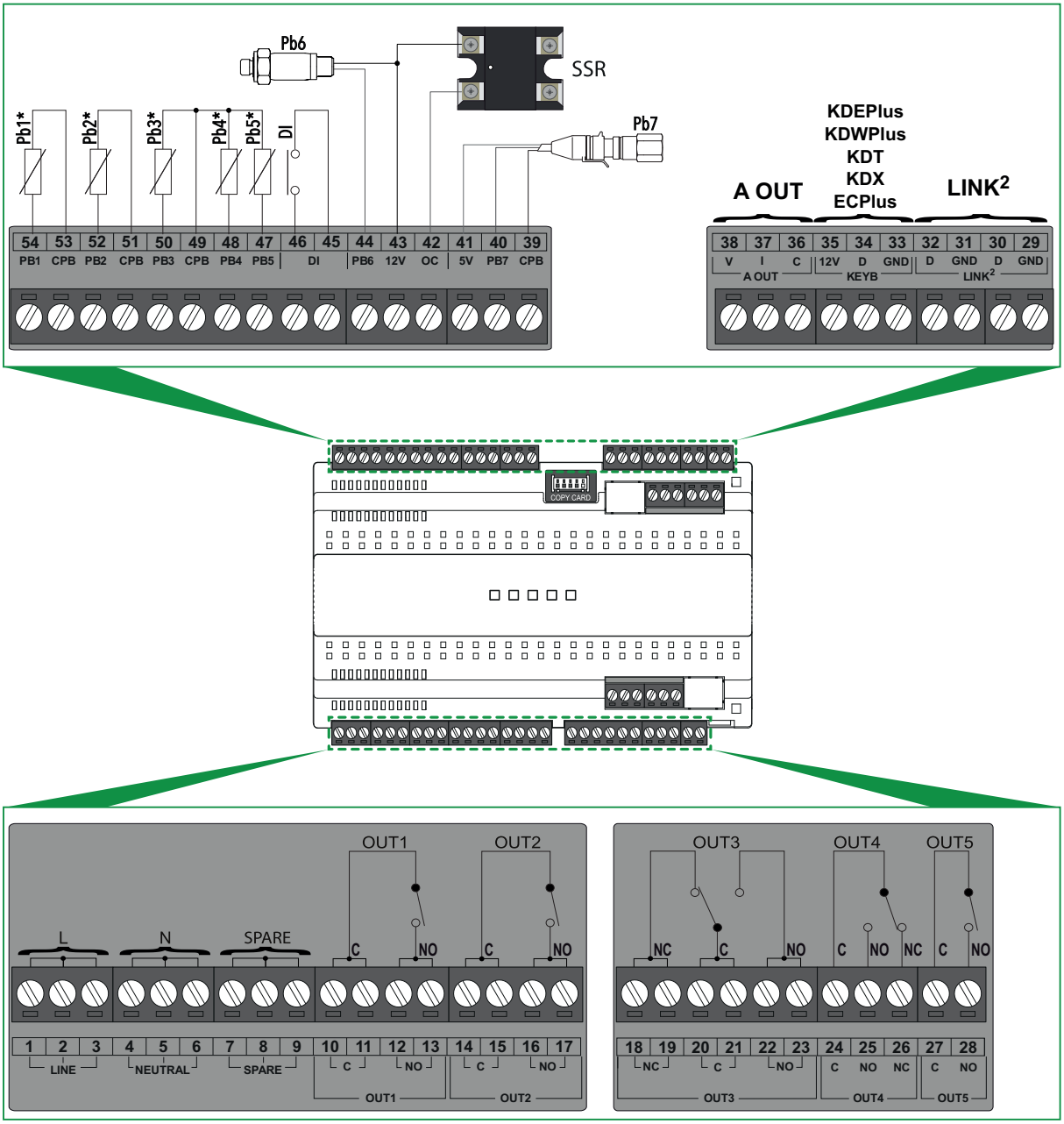

Label	Label		Terminal	Description
Power supply	LINE		1-2-3	Power line
	NEUTRAL		4-5-6	Power supply neutral
	SPARE		7-8-9	Support terminals not connected internally
Digital outputs	OUT1	C	10-11	OUT1 relay Common Terminal
		NO	12-13	OUT1 relay Normally Open
	OUT2	C	14-15	OUT2 relay Common Terminal
		NO	16-17	OUT2 relay Normally Open
	OUT3	NC	18-19	OUT3 relay Normally Closed
		C	20-21	OUT3 relay Common Terminal
		NO	22-23	OUT3 relay Normally Open
	OUT4	C	24	OUT4 relay Common Terminal
		NO	25	OUT4 relay Normally Open
		NC	26	OUT4 relay Normally Closed
	OUT5	C	27	OUT5 relay Common Terminal
		NO	28	OUT5 relay Normally Open
Link2	LINK2-1	GND	31	0 V signal ground connection 1 - local network
		D	30	Signal connection 1 - local network
	LINK2-2	GND	31	0 V signal ground connection 2 - local network
		D	32	Signal connection 2 - local network
Terminal Connection	KEYB	GND	33	0 V signal ground
		D	34	External terminal data terminal
		12 V	35	+12 Vdc power supply output, external terminal power supply
DAC output	A OUT	c	36	Common Terminal
		I	37	Analog output under current (4...20 mA)
		V	38	Analog output under voltage (0...10 V)
Copy Card	TTL		---	UNICARD / DMI / Multi Function Key TTL connection
PB7 - Ratiometric transducer	CPB		39	0 V signal ground
	PB7		40	Ratiometric transducer connection (probe Pb7)
	5 V		41	+5 Vdc power supply output for ratiometric transducer
Open Collector Output	OC		42	Open Collector output (see parameters in FrH folder)
	12 V		43	+12 Vdc power supply output for Open Collector output
PB6 - Pressure transducer	12 V		43	+12 Vdc power supply output for pressure transducer
	PB6		44	Pressure transducer connection (probe Pb6)
Digital input	DI		45-46	Digital input
Analog inputs	PB5		47	Analog input 5 (probe Pb5)
	PB4		48	Analog input 4 (probe Pb4)
	CPB		49	0 V signal ground analog inputs Pb3-Pb4-Pb5
	PB3		50	Analog input 3 (probe Pb3)
	CPB		51	0 V signal ground analog input 2
	PB2		52	Analog input 2 (probe Pb2)
	CPB		53	0 V signal ground analog input 1
	PB1		54	Analog input 1 (probe Pb1)

Note: For further information, refer to the **Technical Data** chapter.

Top board wiring diagrams

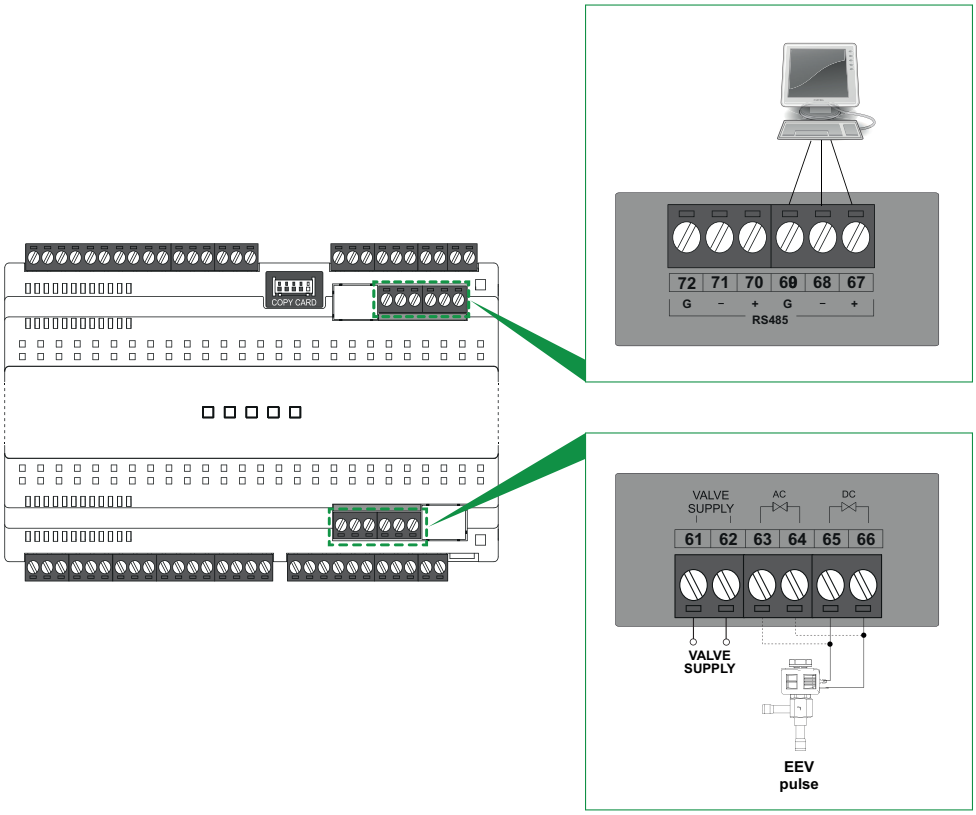

Label	Label	Terminal	Description
Pulse valve power supply	Valve Supply	61	Auxiliary power supply input for pulse electronic expansion valve. Refer to **Auxiliary pulse EEV power supply**.
		62	
Pulse valve output	AC	63	AC Valve connection terminals
		64	
	DC	65	DC Valve connection terminals
		66	
RS485-1	+	67	"+" signal for RS485-1 serial port
	-	68	"-" signal for RS485-1 serial port
	G	69	0 V signal ground
RS485-2	+	70	"+" signal for RS485-2 serial port
	-	71	"-" signal for RS485-2 serial port
	G	72	0 V signal ground

Note: For further information, refer to the **Technical Data** chapter.

Connecting Pulse EEV valves

Take extra care during the valve wiring stages. Choose the most suitable valve coil carefully in accordance with the voltage used.

⚠ WARNING

UNINTENDED EQUIPMENT OPERATION

Verify the information concerning valve parameters as declared by the manufacturer before using the valve in a generic valve configuration.

Failure to follow these instructions can result in death, serious injury, or equipment damage.

Schneider Electric and Eliwell are not responsible for data provided by the valve manufacturer, including technical changes or updates. Please refer to the product manual and the valve manual to verify its suitability and correct configuration.

NOTICE

INOPERABLE DEVICE

- Verify all wiring before engaging the electricity supply.
- Verify the rating data of the valve before connecting it.
- Make sure the valve coil is connected to the correct terminals.
- Make sure terminals 61-62 are connected to an AC power source with voltage of an RMS value suited to the type of valve used.

Failure to follow these instructions can result in equipment damage.

Note: The valve coil should be connected:

- to terminals 63-64 for valves in alternating current (AC)
- to terminals 65-66 for valves in direct current (DC).

Note: Connect terminals 61-62 to an AC power source with voltage of an RMS value:

- equal to the RMS value required by the valve coil if connected to an AC valve.
- equal to the DC value required by the valve coil if connected to a DC valve. For example, to control a valve with DC coil at 240 Vdc, you need to apply a voltage of 240 Vac RMS.

The wiring diagram for Pulse electronic expansion valves is as follows:

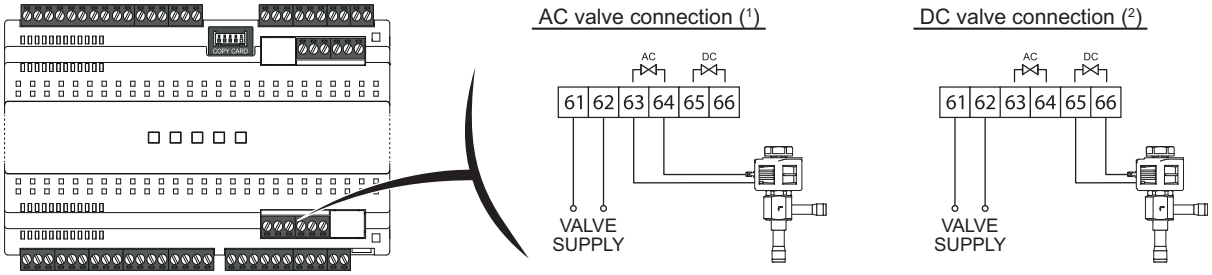

(1) = **AC valve connection**; (2) = **DC valve connection**

NOTE: The wiring diagrams described above also apply to the valves listed below. Manufacturer specifications are subject to change without notice.

Manufacturer	Valve	Reference document
DANFOSS	AKV10, AKV15, AKV20	DKRCC.PD.VA1.A7.02_AKV_sw.pdf
	AKVA (NH3)	DKRCC.PD.VA1.B5.02_AKVA.pdf
ALCO	EX2	EN_EX2__35016.pdf

Technical characteristics

Contents

This section includes the following topics:

Introduction 52
Environmental and electrical characteristics 52
Input characteristics 53
Output characteristics 54
Serial ports 54
Power supply 55
Auxiliary EEV power supply 55

Introduction

All components in the device system meet the European Community (CE) requirements for open devices.

They must be installed in a cabinet or other designated place to suit the environmental conditions and minimize the risk of involuntary contact with high voltages. Use metal casings to improve immunity to electromagnetic fields.

The application of incorrect current or voltage values at the analog inputs and outputs could damage the electronic circuits. Moreover, connection of a device current output to an analog input configured for voltage and vice-versa will also damage the electronic circuits.

NOTICE
INOPERABLE DEVICE • Do not apply voltages over 11 V to the analog inputs of the device when the analog input is configured as a 0...5 V or 0...10 V input. • Do not apply currents over 30 mA to the analog inputs of the device when the analog input is configured as an 0...20 mA or 4...20 mA input. • Do not confuse the applied signal with the analog input configuration. **Failure to follow these instructions can result in equipment damage.**

Environmental and electrical characteristics

Characteristics	Description
The product conforms to the following harmonized Standards	EN 60730-1 and EN 60730-2-9
Construction of control	Electronic automatic Incorporated Control
Purpose of control	Operating control (not safety related)
Type of action	1.C
Pollution degree	2
Overvoltage category	II
Rated impulse voltage	2500 V
Power supply	SMPS 100...240 Vac (±10%), 50/60 Hz
Auxiliary EEV power supply:	100...240 Vac (±10 %) 50/60 Hz
Power draw (maximum)	7.5 W
Ambient operating conditions	Temperature: -5...55°C (23...131°F) Humidity: 10…90% RH (non-condensing)
Transportation and storage conditions	Temperature: -30...85°C (-22...185°F) Humidity: 10…90% RH (non-condensing)
Software class	A
Fuse	Certified according to IEC 60127-1; model: 5x20; value: 1 A fast - 250 V
Loads	See "**Output characteristics**"

If the nominal values within the specified temperature interval are not maintained, the device may operate incorrectly or become damaged and stop working altogether.

⚠ WARNING
UNINTENDED EQUIPMENT OPERATION Do not exceed any of the rated values specified in the ambient and electrical characteristics table. **Failure to follow these instructions can result in death, serious injury, or equipment damage.**

Input characteristics

The characteristics relating to the device inputs are as follows:

Characteristics	Description
Display ranges:	-99.9…99.9 or -999…999
Measuring range:	• **NTC**: -50...110°C (-58...230°F) • **PTC**: -55...150°C (-67...302°F) • **Pt1000**: -60...150°C (-76...302°F)
Display:	3 digits + sign
Accuracy:	• ±1.0°C/°F for temperatures under -30.0°C (-22.0°F) • ±0.5°C/°F for temperatures between -30.0...25.0°C (-22.0...77.0°F) • ±1.0°C/°F for temperatures over 25°C (77°F)
Resolution:	1 or 0.1°C/°F
Analog / Digital inputs:	• **Pb1**: configurable NTC / PTC / Pt1000 / DI input • **Pb2**: configurable NTC / PTC / Pt1000 / DI input • **Pb3**: configurable NTC / PTC / Pt1000 / DI input • **Pb4**: configurable NTC / PTC / Pt1000 / DI input • **Pb5**: configurable NTC / PTC / Pt1000 / DI input • **Pb6**: configurable 4...20 mA / DI input • **Pb7**: configurable ratiometric / DI input • **DI**: multifunctional voltage free digital input • **Pb8** (KDX): 4...20 mA input • **DI1** (KDX): multifunctional voltage free digital input • **DI2** (KDX): multifunctional voltage free digital input

Analog inputs configured as digital inputs are not isolated.

NOTICE
INCORRECT INPUT WIRING ON NON-ISOLATED INPUTS Only use voltage-free inputs on analog inputs configured as digital inputs. **Failure to follow these instructions can result in equipment damage.**

Note: the technical characteristics provided in this document concerning measurement (range, accuracy, resolution, etc.) refer to the instrument itself only and not to any accessories supplied, such as the probes.

Output characteristics

The characteristics relating to the device outputs are as follows:

Characteristics	Description	EU (230 Vac maximum)	USA (230 Vac maximum)
Digital outputs:	**OUT1** (SPST)	NO 12(5) A	NO: 12A resistive, 5FLA 30LRA
	OUT2 (SPST)	NO 12(5) A	NO: 12A resistive, 5FLA 30LRA
	OUT3 (SPDT)	NO 12(5) A NC 12 A resistive	NO: 12A resistive, 5FLA 30LRA NC: 12A resistive
	OUT4 (SPDT)	NO 8(4) A - NC 6(3) A	NO: 8A resistive, 4.9FLA 29.4LRA NC: 6A resistive
	OUT5 (SPST)	NO 8(4) A	NO: 8A resistive, 4.9FLA 29.4LRA
	OUT4 KDX (SPST)	NO 8(5) A	NO: 8A resistive, 4.9FLA 29.4LRA
	OUT5 KDX (SPDT)	NO 8(4) A - NC 6(3) A	NO: 8A resistive, 4.9FLA 29.4LRA NC: 6A resistive
OC (Open Collector) Output:	**OC**: 1 multifunction output: 12 Vdc - 20 mA		
DAC output:	**A OUT**: 1 multifunction output: 0...10 Vdc / 4...20 mA		
Pulse EEV driver output:	**AC/DC**: 1 SSR relay 100...240 Vac/dc; maximum I = 300 mA		

Serial ports

The mechanical characteristics of the device inputs are as follows:

Serial	Description	Notes
TTL	1 TTL serial port	Connection between the device and accessories for quick programming UNICARD, Multi Function Key (MFK) and Device Manager (via DMI)
RS485	1 split RS485 serial port	If the device is connected to the RS485 communication line, apply a 120 Ω termination resistor between line “+” and line “-” of the RS485
Link2	1 split Link2 serial port	Connection of several controllers (up to 8) forming a local network
KEYB	1 serial port per terminal	• Connection between the device and the external terminal **KDEPlus**, **KDWPlus**, **KDT** or **KDX** • Connection between the device and the viewer **ECPlus**

For further information, please refer to "Serial connections" on page 29.
Take extreme care with the connection of serial lines. Incorrect wiring could prevent the device from working.

Do not communicate over the RS485 serial port if the UNICARD / DMI / MFK is connected and vice-versa.

NOTICE
INOPERABLE DEVICE Only connect the RS485 serial port or the TTL (for UNICARD/DMI/Multi Function Key). **Failure to follow these instructions can result in equipment damage.**

Power supply

The device can be powered with a voltage of 100...240 Vac (±10%) 50/60 Hz.

Depending on the requirements of individual units and/or the country of installation, if the country's mains voltage is within the operating range, the device can be connected directly to the mains power supply.

Auxiliary EEV power supply

Choose the most suitable valve coil carefully in accordance with the voltage used.

Schneider Electric and Eliwell are not responsible for data provided by the valve manufacturer, including technical changes or updates. Please refer to the product manual and the valve manual to verify its suitability and correct configuration.

NOTICE
INOPERABLE DEVICE • Verify all wiring before engaging the electricity supply. • Verify the rating data of the valve before connecting it. • Make sure the valve coil is connected to the correct terminals. • Make sure terminals 61-62 are connected to an AC power source with voltage of an RMS value suited to the type of valve used. **Failure to follow these instructions can result in equipment damage.**

Note: The valve coil should be connected:

- to terminals 63-64 for valves in alternating current (AC)
- to terminals 65-66 for valves in direct current (DC).

Note: Connect terminals 61-62 to an AC power source with voltage of an RMS value:

- equal to the RMS value required by the valve coil if connected to an AC valve.
- equal to the DC value required by the valve coil if connected to a DC valve. For example, to control a valve with DC coil at 240 Vdc, you need to apply a voltage of 240 Vac RMS.

User interface and operation

Contents

This section includes the following topics:

KDEPlus Terminal 57
KDWPlus Terminal 58
KDT Terminal (Vertical and Horizontal) 60
KDX Terminal 62
Device connection with terminal and/or echo viewer 64
Using the device 66
"Machine Status" Menu 69
`Programming" menu 70
Setting and calibrating the probes 71
Setting the displayed values 72
Connection with Televis protocol 74

KDEPlus Terminal

Interface

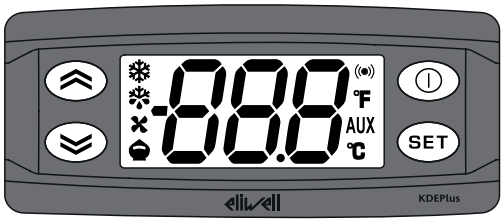

Keys

Key	press and release	press for at least 5 seconds
	• Scroll through the menu options • Increase the values	From outside the menus only. Can be configured by the user (parameter **H31**). Default: Manual defrost (**H31** = 1).
	• Scroll through the menu options • Decrease the values	From outside the menus only. Can be configured by the user (parameter **H32**). Default: not configured (**H32**=0).
	• Go back up one level in the menu • Confirm the parameter value	From outside the menus only. Can be configured by the user (parameter **H33**) Default: Stand-by (**H33**=6).
	• Access the "Machine Status" menu • Display alarms (if present) • Confirm commands	• Access the "Programming" menu • When switching on, access selection mode for the application **AP1**...**AP8** to be loaded.
	Activate remote display function (terminal shared on Link2	

Icons

Icon	Function	Description
	Compressor	On steadily: compressor active Flashing: delay, protection or activation inhibited Off: compressor off
	Defrost	On steadily: defrost active Flashing: defrost activated manually or via digital input Off: defrost inactive
	Evaporator fans	On steadily: fans active Off: fans off
	Energy saving	On steadily: Energy saving active Flashing: reduced set active Off: Energy Saving not active
	Alarm	On steadily: alarm present Flashing: alarm silenced Off: No alarm active
	°F	On steadily: setting in °F (**dro** (1) = F) Flashing: terminal shared on Link2 Off: light off
	AUX	On steadily: AUX output active and/or light on Flashing: Deep cooling active Off: AUX output off
	°C	On steadily: setting in °C (**dro** (0) = C) Flashing: terminal shared on Link2 Off: a value not relating to temperature or a label is displayed

KDWPlus Terminal

Interface

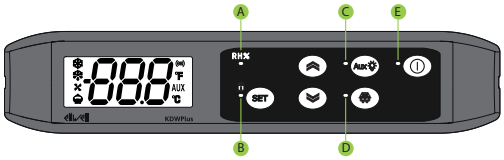

Keys

Key	press and release	press for at least 5 seconds
	• Scroll through the menu options • Increase the values	From outside the menus only. Can be configured by the user (parameter **H31**). Default: Manual defrost (**H31** = 1). Change to **H31**=0.
	• Scroll through the menu options • Decrease the values	From outside the menus only. Can be configured by the user (parameter **H32**). Default: Not configured (**H32** = 0).
	• Go back up one level in the menu • Confirm the parameter value	From outside the menus only. Can be configured by the user (parameter **H33**). Default: Stand-by (**H33**=6).
	• Access the "Machine Status" menu • Display alarms (if present) • Confirm commands	• Access the "Programming" menu • When switching on, access selection mode for the application **AP1**...**AP8** to be loaded
	Activate/deactivate the Manual Defrost function	From outside the menus only. Can be configured by the user (parameter **H35**). Default: Activate stand-by (**H35**=6). Change to **H35**=1.
	Activate the AUX output / Switch on the light	From outside the menus only. Can be configured by the user (parameter **H34**). Default: Light (**H34**=3).
	Activate remote display function (terminal shared on Link2)	

LED

Nr	Function	Description
A		Forced Fan activation (if H1**x** or i1**y** = 15 with **x** = 1...8 and **y** = 1 or 2)
B		Terminal locked
C		Light relay activation via key
D		Defrost active
E		Device off

Icons

Icon	Function	Description
	Compressor	On steadily: compressor active Flashing: delay, protection or activation inhibited Off: compressor off
	Defrost	On steadily: defrost active Flashing: defrost activated manually or via digital input Off: defrost inactive
	Evaporator fans	On steadily: fans active Off: fans off
	Energy saving	On steadily: Energy saving active Flashing: reduced set active Off: Energy Saving not active
	Alarm	On steadily: alarm present Flashing: alarm silenced Off: No alarm active
	°F	On steadily: setting in °F (**dro** (1) = F) Flashing: terminal shared on Link2 Off: light off
	AUX	On steadily: AUX output active and/or light on Flashing: Deep cooling active Off: AUX output off
	°C	On steadily: setting in °C (**dro** (0) = C) Flashing: terminal shared on Link2 Off: a value not relating to temperature or a label is displayed

KDT Terminal (Vertical and Horizontal)

Interface

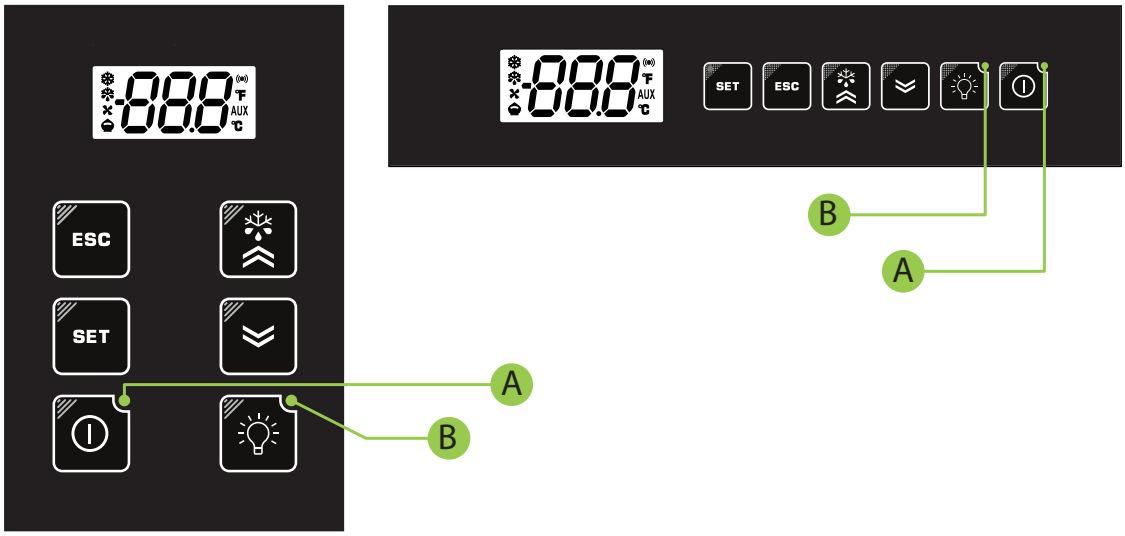

Keys

Key	press and release	press for at least 5 seconds
ESC	• Go back up one level in the menu • Confirm the parameter value	From outside the menus only. Can be configured by the user (parameter **H33**). Default: Stand-by (**H33**=6).
SET	• Access the "Machine Status" menu • Display alarms (if present) • Confirm commands	• Access the "Programming" menu • When switching on, access selection mode for **AP1**...**AP8** to be loaded
	---	From outside the menus only. Can be configured by the user (parameter **H35**). Default: Stand-by (**H35**=6).
	• Scroll through the menu options • Increase the values	From outside the menus only. Can be configured by the user (parameter **H31**). Default: Manual defrost (**H31** = 1).
	• Scroll through the menu options • Decrease the values	From outside the menus only. Can be configured by the user (parameter **H32**). Default: Not configured (**H32** = 0).
	Switch the light on/off	From outside the menus only. Can be configured by the user (parameter **H34**). Default: Light (**H34**=3).
+ ESC	Activate remote display function (terminal shared on Link2)	

LED

Nr	Function	Description
A		Device off.
B		Light relay activation via key.

Icons

Icon	Function	Description
	Compressor	On steadily: compressor active Flashing: delay, protection or activation inhibited Off: compressor off
	Defrost	On steadily: defrost active Flashing: defrost activated manually or via digital input Off: defrost inactive
	Evaporator fans	On steadily: fans active Off: fans off
	Energy saving	On steadily: Energy saving active Flashing: reduced set active Off: Energy Saving not active
	Alarm	On steadily: alarm present Flashing: alarm silenced Off: No alarm active
	°F	On steadily: setting in °F (**dro** (1) = F) Flashing: terminal shared on Link2 Off: light off
	AUX	On steadily: AUX output active and/or light on Flashing: Deep cooling active Off: AUX output off
	°C	On steadily: setting in °C (**dro** (0) = C) Flashing: terminal shared on Link2 Off: a value not relating to temperature or a label is displayed

KDX Terminal

Interface

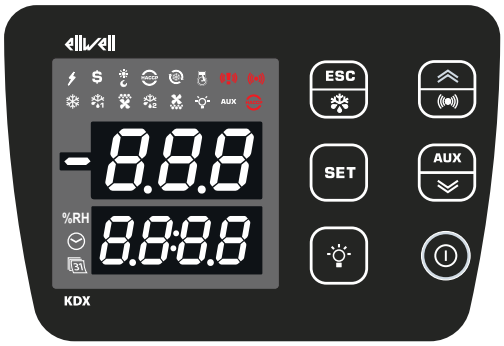

Keys

Key	press and release	press for at least 3 seconds
ESC	• Go back up one level in the menu • Confirm the parameter value	From outside the menus only. Can be configured by the user (parameter **H33**). Default: Stand-by (**H33**=6). Change to **H33**=1 (defrost)
SET	• Access the "Machine Status" menu • Display alarms (if present) • Confirm commands	• Access the "Programming" menu • When switching on, access selection mode for the application **AP1**...**AP8** to be loaded
	Switch the light on / off	From outside the menus only. Can be configured by the user (parameter **H34**). Default: Light (**H34**=3).
	• Scroll through the menu options • Increase the values	• From outside the menus only. Can be configured by the user (parameter **H31**). Default: Manual defrost (**H31** = 1). Change to **H31**=0. • Alarm acknowledgment
AUX	• Scroll through the menu options • Decrease the values	From outside the menus only. Can be configured by the user (parameter **H32**). Default: Not configured (**H32** = 0). Change to **H32**=5 (AUX).
	Device Stand-by	• Switch device on / off. • From outside the menus only. Can be configured by the user (parameter **H35**). Default: Stand-by (**H35**=6).
+ ESC	Activate remote display function (terminal shared on Link2)	

Icons

Icon	Function	Description
	Power supply	On steadily: power supply present Off: power supply absent
	Reduced setpoint	On steadily: reduced setpoint enabled Off: reduced setpoint not enabled
	Energy saving	On steadily: energy saving enabled Off: energy saving not enabled
HACCP	**NOT USED**	
	Deep Cooling (DCC)	On steadily: deep cooling cycle enabled Off: deep cooling cycle not enabled

Icon	Function	Description
	**NOT USED**	
	Two thresholds regulator alarm Panic alarm	On steadily: panic alarm and/or two thresholds regulator alarm active Flashing: two thresholds regulator pre-alarm active Off: no alarm
	Alarm	On steadily: alarm active Flashing: alarm acknowledged Off: no alarm
	Compressor	On steadily: compressor active Flashing: compressor activation delay Off: compressor not active
	Defrost 1	On steadily: defrost 1 active Flashing: dripping 1 active Off: no defrost
	Evaporator fans	On steadily: evaporator fans active Flashing: forced ventilation Off: evaporator fans off
	Defrost 2	On steadily: defrost 2 active Flashing: dripping 2 active Off: no defrost
	**NOT USED**	
	Light	On steadily: light on Off: light off
AUX	Auxiliary (AUX)	On steadily: auxiliary output active Off: auxiliary output off
	**NOT USED**	
%RH	Humidity	On steadily: display a relative humidity percentage (only if **ddE**=10) Off: otherwise
	Time	On steadily: display hours and minutes (only if **ddE**=11) Off: otherwise
	**NOT USED**	

Device connection with terminal and/or echo viewer

Introduction

Only one **KDEPlus**, **KDWPlus**, **KDT** (Vertical or Horizontal) or **KDX** terminal and one **ECPlus** display module can be connected to each base for remote display purposes.

Connection with KDEPlus and ECPlus

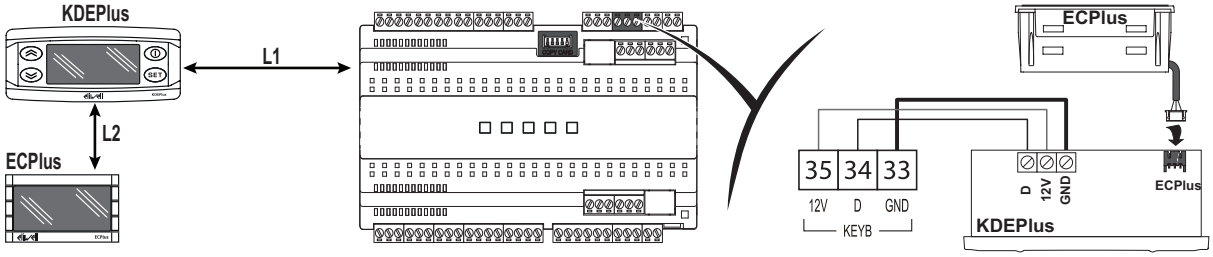

Legend: **L1** = maximum 15 m / 49.21 ft; **L2** = maximum 85 m / 278.87 ft

Connection with KDWPlus and ECPlus

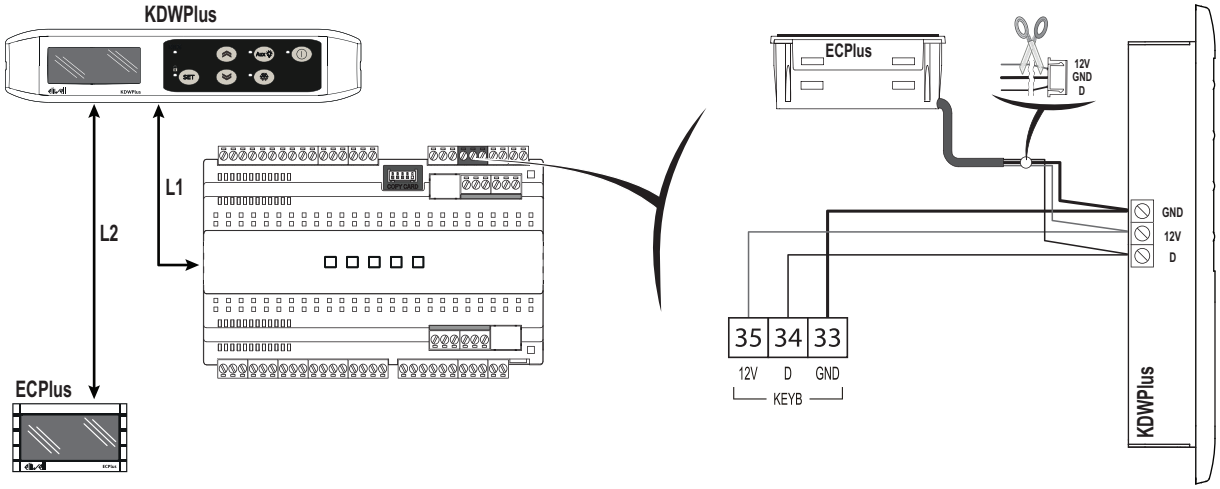

Legend: **L1** = maximum 15 m / 49.21 ft; **L2** = maximum 85 m / 278.87 ft

Note: An **ECPlus** module can be connected to the **KDWPlus** on the same terminal to which the base is connected.

Connection with KDT (Vertical or Horizontal)

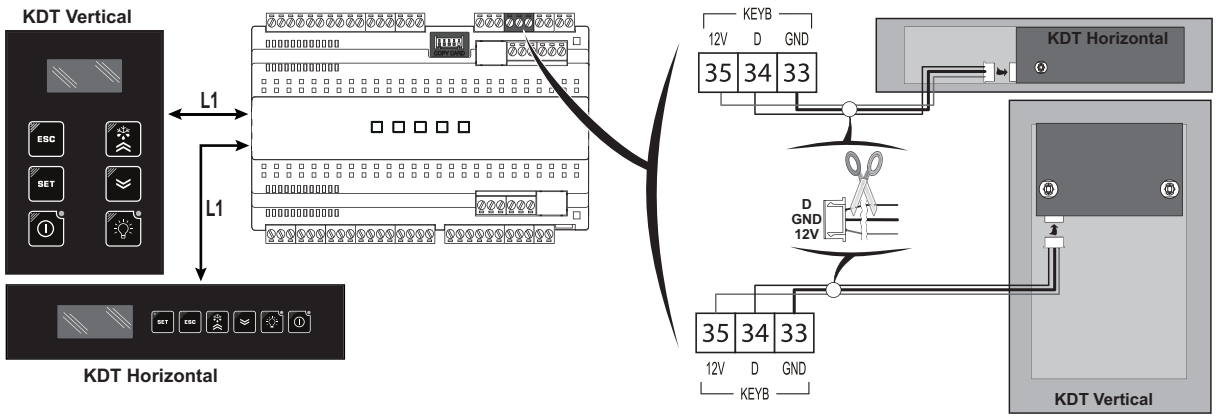

Legend: **L1** = maximum 100 m / 328.08 ft.

Connection with KDX

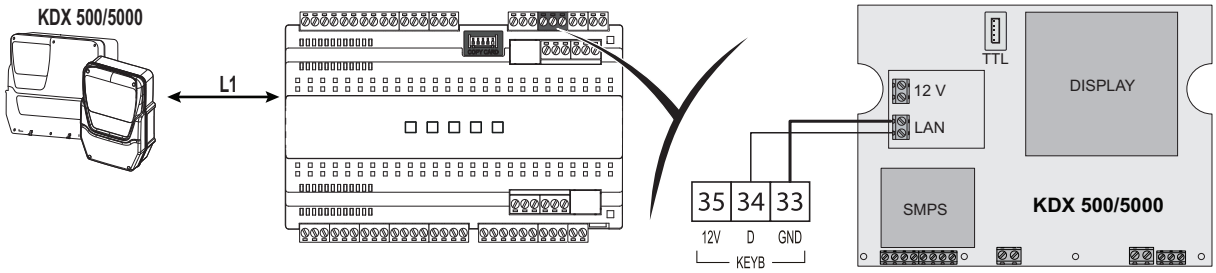

Legend: **L1** = maximum 100 m / 328.08 ft.

Note: to activate the same functions of the default setting, configure the following parameters: **H31** = 0; **H32** = 5 and **H33** = 1.

Connection with ECPlus

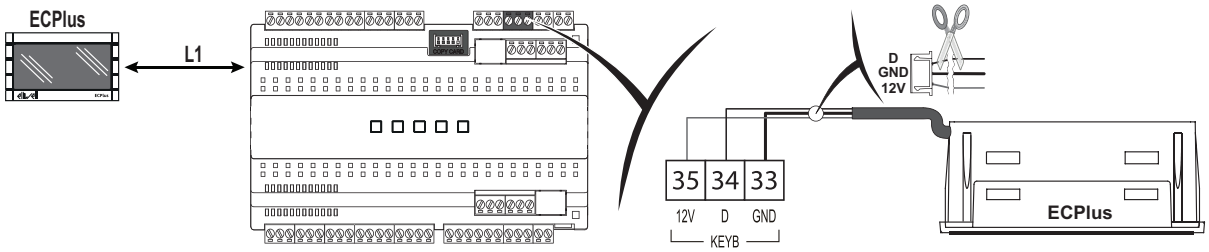

Legend: **L1** = maximum 100 m / 328.08 ft.

Note: An **ECPlus** display can be connected to the device using the same terminal where one of the user terminal is already connected.

Using the device

Switching on for the first time

Once the electrical connections have been completed, simply power up the device for it to start working.
At the first startup:

1. Select and load the preset application - **AP1**...**AP8** - that best reflects the usage requirements.
2. Verify and, if necessary, adjust the value of the main device parameters to adapt the selected application to your system.
3. Make sure there are no active alarms (see alarms section).

Loading Preset Applications

The procedure for loading one of the preset applications is:

1. Switch on the terminal connected to the device; press and hold SET until label "AP1" appears.

   Note: On the **KDT** terminal, within 30 seconds of switching the device on, press and hold any button for a least 1 second to unlock the terminal and then press and hold and simultaneously until label "AP1" appears.

   Note: On the **KDX** terminal, within 30 seconds of switching the device on, press and simultaneously until label “AP1” appears.
2. Scroll through applications **AP1**...**AP8** using and
3. Confirm the selected preset application using SET.
   Note: The process can be canceled by pressing or letting a timeout occur (15 seconds)
4. If the procedure was completed successfully, the display will show "**yES**"; otherwise it will show "**Err**"
5. The device will restart and revert to showing the main display

The procedure for loading one of the preset applications restores the respective default values, with the exception of the parameters non specific to the application that retain the value set previously. These values, left unaltered, may not be suitable and may therefore need to be changed.

NOTICE
INOPERABLE DEVICE Verify the parameters after loading a preset application. **Failure to follow these instructions can result in equipment damage.**

Setting the setpoint

1. **KDT terminals only**: press any key for at least 1 second to unlock the terminal
2. Press and release SET to access the “Machine status” menu
3. Scroll through the folders with and until you find the folder **SEt**
4. Press SET to view the current setpoint value.
5. Change the setpoint value using and within 15 seconds.
6. To confirm the value press SET or , or let a timeout occur (15 seconds).

Locking/unlocking the terminal

The terminal can be locked/unlocked by programming the parameter **LOC** as required.

If the terminal is locked, it is possible to access the “Machine status” menu by pressing the key SET and view the Setpoint, but the value cannot be changed. To unlock the terminal, repeat the procedure used for locking it.

The terminal only locks automatically on **KDT**:

- on startup
- after 30 seconds of inactivity

Password

The passwords **PA1** and **PA2** are required to access the device parameters:

- **PA1**: access the User parameters (default: **PA1** = 0 - disabled)
- **PA2**: access the Installer parameters (default: **PA2** = 15 - enabled)

To change the password value:

1. Press and hold for at least 5 seconds SET
2. Scroll through the parameters with ∧ and ∨ until you find the label “PA2”
3. Press and release SET
4. Set the value “15” using the keys ∧ and ∨
5. Confirm the value by pressing SET (the first folder will be displayed)
6. Scroll through the folders with ∧ and ∨ until you find the label “diS”
7. Press and release SET
8. Scroll through the parameters with ∧ and ∨ until you find the label "PS1" or "PS2", depending on whether you want to change access password **PA1** or **PA2**
9. To confirm the value press SET or ⏻, or let a timeout occur (15 seconds).

Note:If **PA1**=0, the User parameters will be not protected and displayed before **PA2** label.

Note: If the value entered is incorrect, the label **PA1**/**PA2** will be shown again. Repeat the procedure.

Viewing the probe values

1. **KDT terminal only**: press any key for at least 1 second to unlock the terminal
2. Press and release SET to access the “Machine status” menu
3. Scroll through the folders with ∧ and ∨ until you find the folder **Pb1**...**Pb7**
4. Press SET to view the value measured by the corresponding probe.

Note: the displayed value cannot be changed.

Setting frequently used functions

Some frequently used functions may be paired with the keys by suitably configuring the corresponding parameters; they can then be activated by pressing and holding the paired key.

Note: some keys may not be present, depending on the model.

Key				Parameter
KDEPlus	KDWPlus	KDT	KDX	
				**H31**
				**H32**
				**H33**
---				**H34**
---				**H35**

Value H31/H32/H33/H34/H35	Description
0	Disabled
1	Defrost
2	Reduced Set
3	Light
4	Energy Saving
5	AUX
6	Stand-by
7	Deep Cooling Cycle
8	Defrost start/end
9	Counter cleaning function

Setting the main parameters

See "User" menu in the parameters table for the various models.

"Machine Status" Menu

Introduction

Press and release SET to access the "Machine status" menu.

Menu

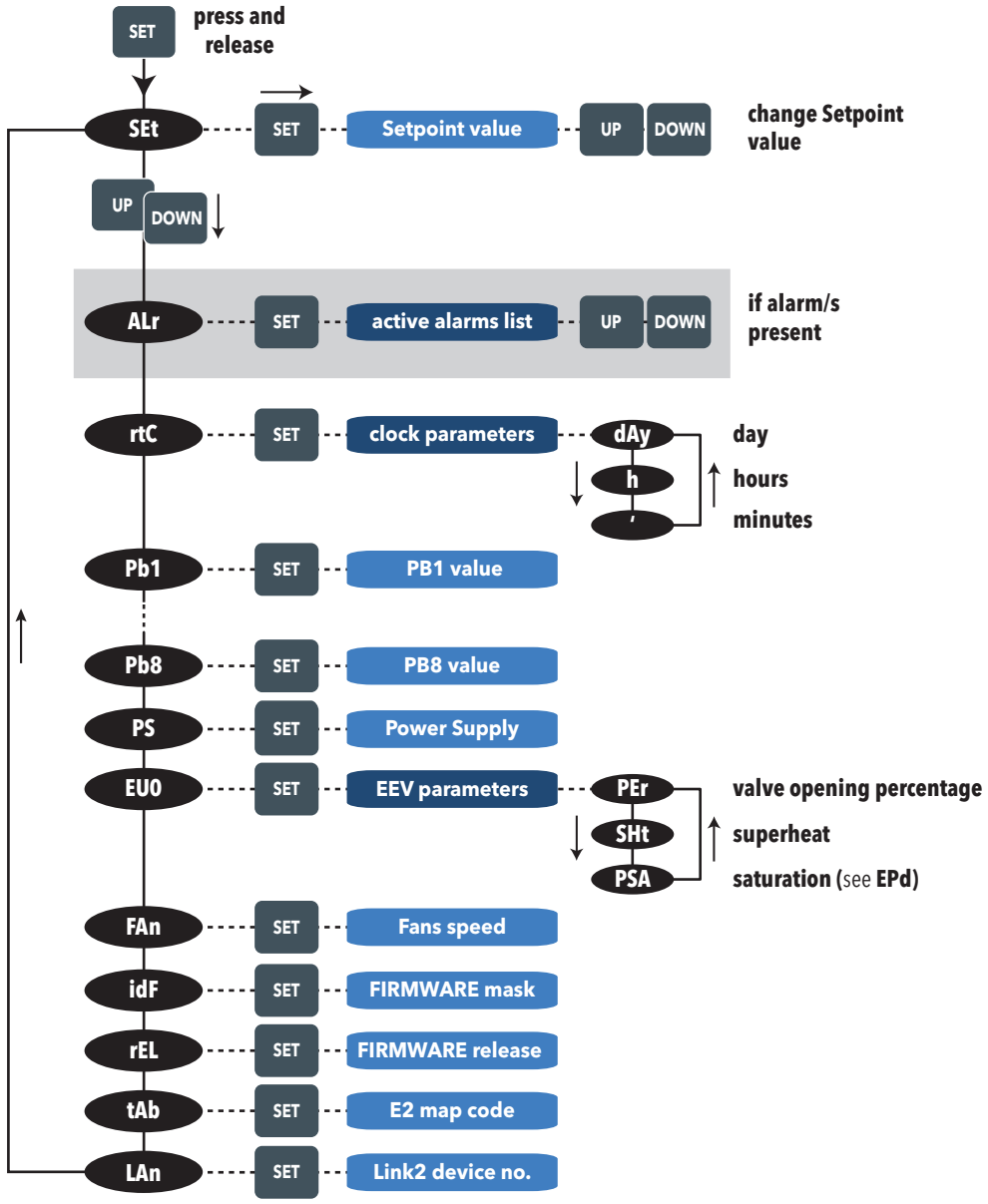

`Programming" menu

Introduction

Press and hold SET for at least 5 seconds to access the "Programming" menu.
If required, an access password **PA1** for "User" parameters or **PA2** for "Installer" parameters will be requested (see section "**Passwords**").

Note: Switch the device off and on again every time you change the parameter configuration.

Menu

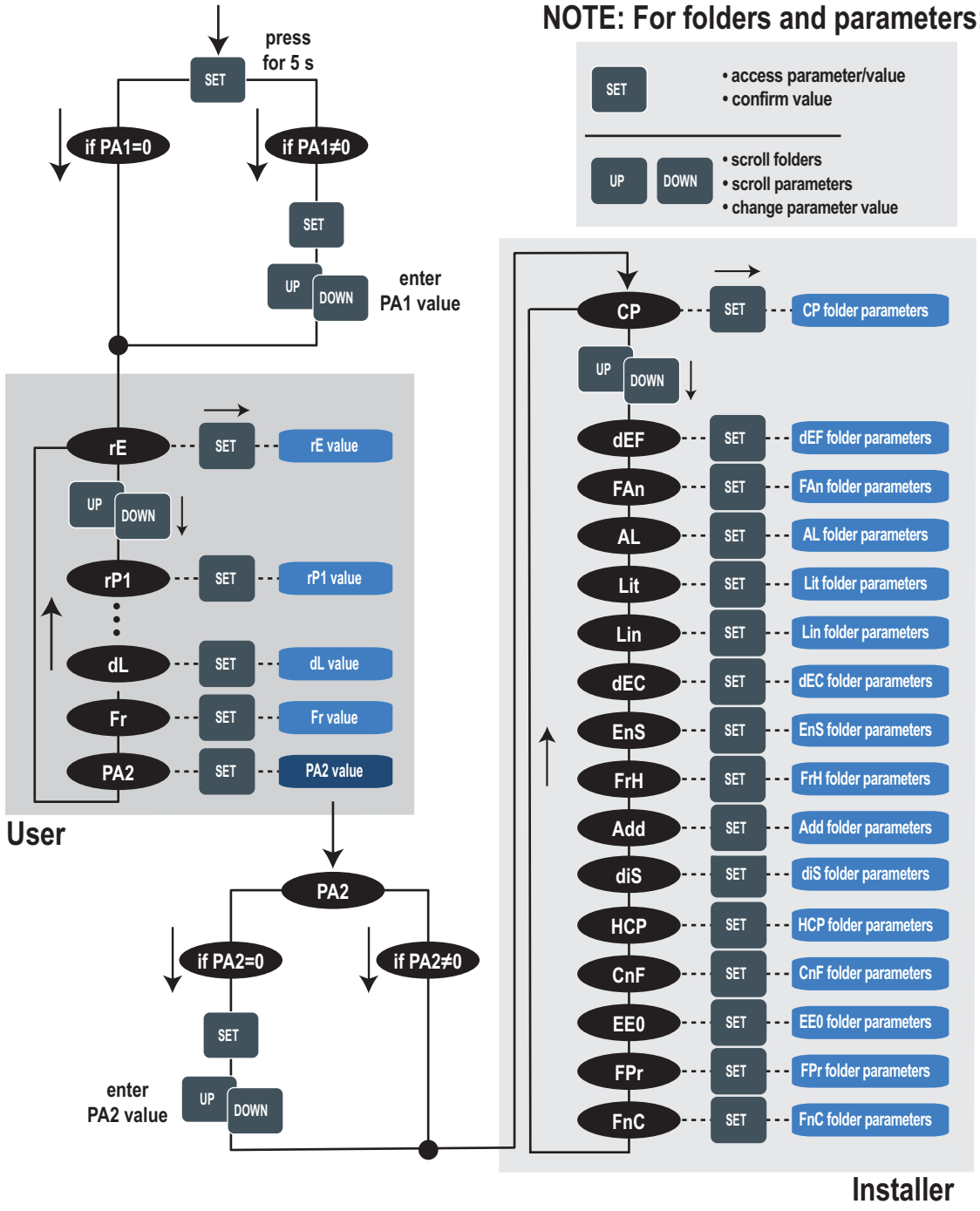

Setting and calibrating the probes

Probe inputs

The device has the following inputs:

- 5 inputs NTC / PTC / Pt1000 (**Pb1**, **Pb2**, **Pb3**, **Pb4** and **Pb5**)
- 1 input 4...20 mA (**Pb6**)
- 1 input ratiometric (**Pb7**)

Note: The temperature probes (**Pb1**...**Pb5**) must all be of the same type.

Note: The temperature probes **Pb1...Pb7** are also be set as digital inputs by setting parameters **H11 (Pb1)...H17 (Pb7)**≠0 and **H41 (Pb1)...H47 (Pb7)**= di.

Setting the probe type

To configure the temperature probes (**Pb1**...**Pb5**), you need to set parameter **H00** at **User** level or in folder **CnF** within the "Installer" menu:

H00 value	Probe type
ntc (0) (default)	**NTC**
Ptc (1)	PTC
Pt1 (2)	Pt1000

Probe calibration

The **diS** folder, within the "Installer" menu, contains the parameters

- **CA1** (probe Pb1)
- **CA2** (probe Pb2)
- **CA3** (probe Pb3)
- **CA4** (probe Pb4)
- **CA5** (probe Pb5)
- **CA6** (probe Pb6)
- **CA7** (probe Pb7)

to force an additional value (with sign) on reading the corresponding probe (if managed by the specific model).

Setting the displayed values

Introduction

The following settings refer to the parameters in folder **diS**.

Display with decimal point

You need to set parameter **ndt**:

ndt value	Description
no (0)	Display with no decimal point
yes (1)	Display with decimal point and resolution to tenths of a degree

Note: this setting only influences the displaying of data, not the resolution of the measurement or the accuracy of the device's calculations.

Default display

You need to set parameter **ddd**:

ddd value	Description
SP1 (0)	Display setpoint
Pb1 (1)	Display the value read by Pb1
Pb2 (2)	Display the value read by Pb2
Pb3 (3)	Display the value read by Pb3
Pb4 (4)	Display the value read by Pb4
Pb5 (5)	Display the value read by Pb5
Pbi (6)	Display the value read by the virtual probe
LP (7)	Display the value read by the remote probe (Link2)
PFi (8)	Display the value read by the filtered virtual probe

Viewer default KDX/ECPlus display

You need to set parameter **ddE**:

ddd value	Description
SP1 (0)	Display setpoint
Pb1 (1)	Display the value read by Pb1 probe
Pb2 (2)	Display the value read by Pb2 probe
Pb3 (3)	Display the value read by Pb3 probe
Pb4 (4)	Display the value read by Pb4 probe
Pb5 (5)	Display the value read by Pb5 probe
Pbi (6)	Display the value read by the virtual probe
LP (7)	Display the value read by the remote probe (Link2)
PFi (8)	Display the value read by the filtered virtual probe
PbC (9)	Display the value read by Pb8 probe on **KDX** terminal
PHr (10)	Display the humidity percentage value read by Pb8 probe on **KDX** terminal (%RH icon on)
rtC (11)	Display hours and minutes (**KDX** terminal only)

Note: If the selected probe is not managed by that specific model, the displayed data should not be considered reliable.

KDX additional features

A second display is available to set dedicated functions.

By setting parameter **ddE** it is possible to show:

- humidity percentage (**ddE** = 10; PHr)
- hours and minutes (**ddE** = 11; rtC)

By setting parameter **08P** you can customize the value shown on the ECPlus terminal:

- **0** = value with decimal point
- **1** = value without decimal point
- **2** = value * 10

(**Televis only**) By setting parameter **08U** it is possible to customize the Unit of measure of the values read via Televis.

- **0** = disabled
- **1** = %RH
- **2** = ppm
- **3** = % valve opening
- **4** = °C
- **5** = °F

Display during defrost

You need to set parameter **ddL**:

ddL value	Description
0	Display the values read by the regulation probe
1	Display the value read by the regulation probe at the start of defrost
2	Display the label **dEF**

Set the unit of measure for the temperatures

You need to set parameter **dro**:

dro value	Description
C (0)	Display the temperature in °C
F (1)	Display the temperature in °F

Note: this setting only influences how the temperatures read by the probes are displayed. After changing the unit of measure from °C to °F, the value of parameters **SEt**, **dF1/dF2**, etc, remains the same and they will take on a different meaning, since they are expressed in a new unit of measure (**SEt** = 10°C becomes **SEt** = 10°F).

Connection with Televis protocol

The device uses Modbus protocol to communicate.
To convert the Modbus network address into the Televis protocol use the table below:

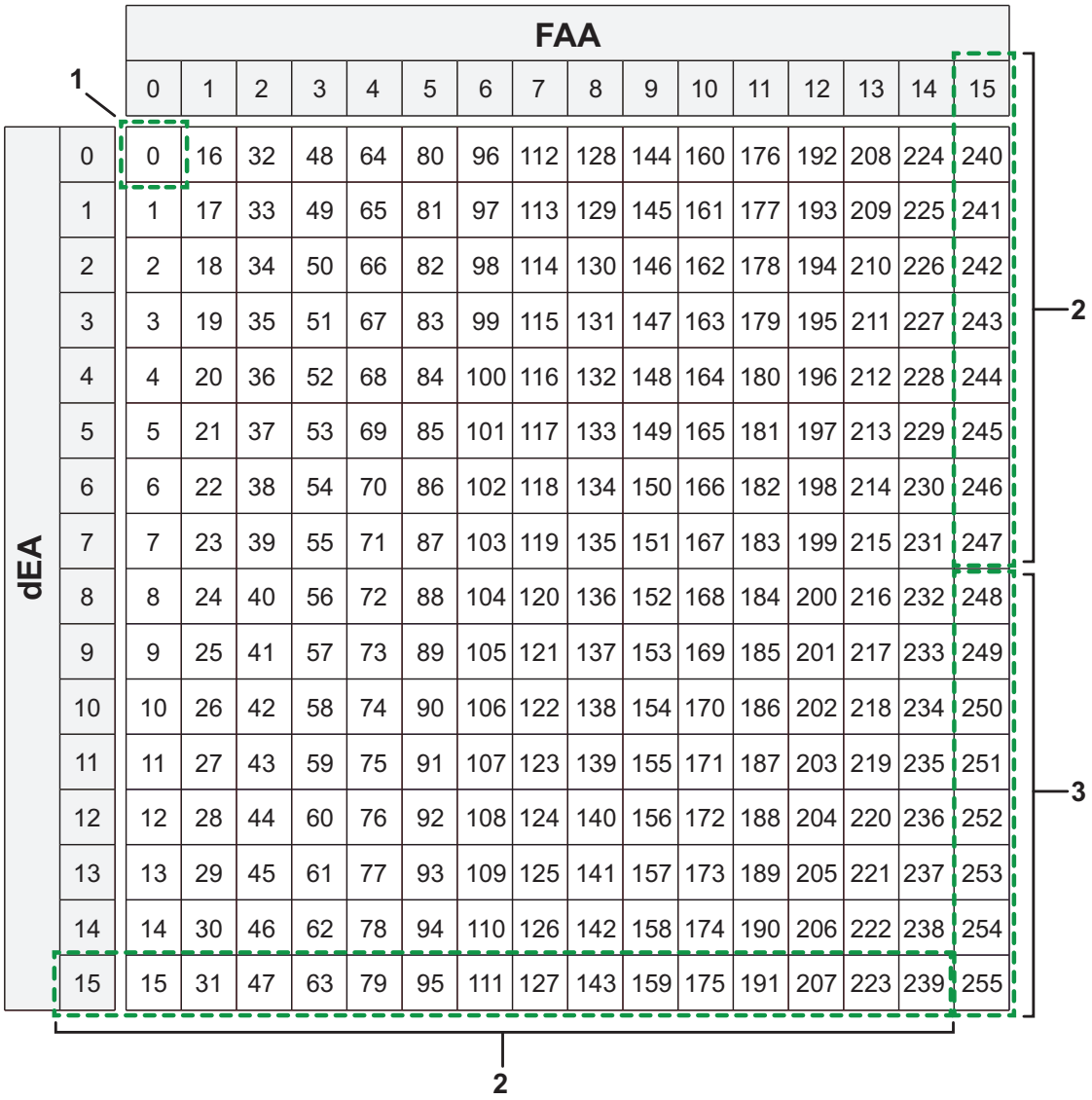

dEA \ FAA	0	1	2	3	4	5	6	7	8	9	10	11	12	13	14	15
0	0	16	32	48	64	80	96	112	128	144	160	176	192	208	224	240
1	1	17	33	49	65	81	97	113	129	145	161	177	193	209	225	241
2	2	18	34	50	66	82	98	114	130	146	162	178	194	210	226	242
3	3	19	35	51	67	83	99	115	131	147	163	179	195	211	227	243
4	4	20	36	52	68	84	100	116	132	148	164	180	196	212	228	244
5	5	21	37	53	69	85	101	117	133	149	165	181	197	213	229	245
6	6	22	38	54	70	86	102	118	134	150	166	182	198	214	230	246
7	7	23	39	55	71	87	103	119	135	151	167	183	199	215	231	247
8	8	24	40	56	72	88	104	120	136	152	168	184	200	216	232	248
9	9	25	41	57	73	89	105	121	137	153	169	185	201	217	233	249
10	10	26	42	58	74	90	106	122	138	154	170	186	202	218	234	250
11	11	27	43	59	75	91	107	123	139	155	171	187	203	219	235	251
12	12	28	44	60	76	92	108	124	140	156	172	188	204	220	236	252
13	13	29	45	61	77	93	109	125	141	157	173	189	205	221	237	253
14	14	30	46	62	78	94	110	126	142	158	174	190	206	222	238	254
15	15	31	47	63	79	95	111	127	143	159	175	191	207	223	239	255

Legend:

1	Not used in Modbus/RTU protocol
2	Not configurable in Televis protocol
3	Not configurable in Televis protocol and not used in Modbus/RTU protocol

Example

If the Modbus address **Adr** is set to 120, the corresponding values for **dEA**/**FAA** are:

- **dEA** = 8
- **FAA** = 7

Tools

Contents

This section includes the following topics:

MFK (Multi Function Key) 76
UNICARD 76
Copy parameters (UNICARD/MFK) 77
Boot Loader Firmware 78
Terminal shared on Link2 78

MFK (Multi Function Key)

The Multi Function Key (MFK) lets you download/upload a parameter map from/to a device.



UNICARD

The UNICARD allows uploading/downloading of a parameters map from one device to another. Its flexibility means the various devices can be customized quickly and easily.

The UNICARD:

- can be connected directly to the computer via USB
- Can be powered by means of a power supply unit or a USB battery and directly powers the device during the parameter map downloading/uploading steps.

Power bank

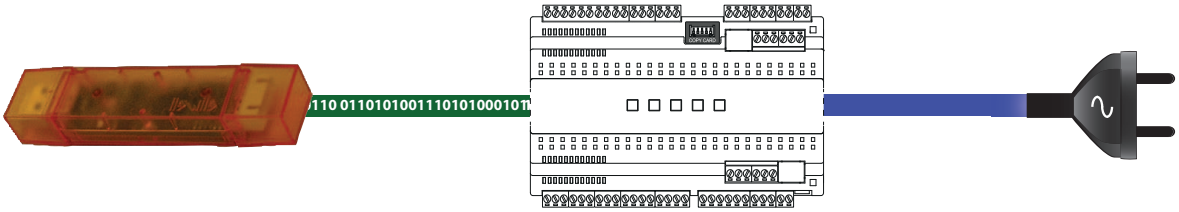

Power supply with USB power supply unit



Power supply with USB battery

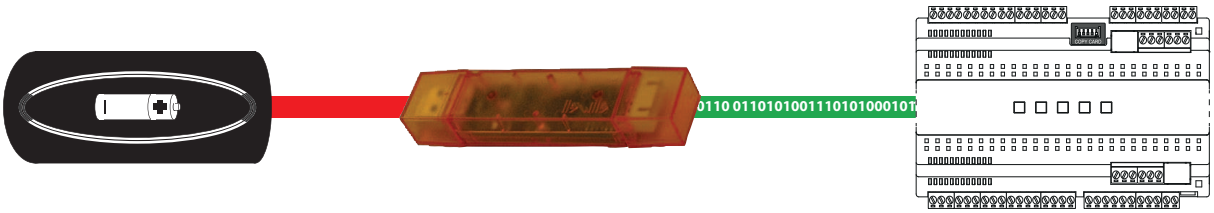

Copy parameters (UNICARD/MFK)

Introduction

The UNICARD/MFK connects to the TTL serial port and allows uploading/downloading of a parameters map.

Note: The UNICARD can be connected directly to a computer by means of a USB port. Format the UNICARD the first time it is used.

Note: Before loading or downloading a map, make sure that communication with the supervisor has been cut off. In other words, disconnect the RS485 from the device or stop Supervision system acquisitions.

Formatting the UNICARD (Fr)

1. Access the Installer parameters, entering the **PA2** password if enabled.
2. Scroll through the folders with ⌃ and ⌄ until you find the folder **FPr**
3. Press SET to confirm.
4. Scroll through the parameters using ⌃ and ⌄ until you see parameter **Fr** and press SET: if the operation is a success, the display will show **yES**, otherwise it will show **no**.

Note: This procedure deletes all data on the key. This operation cannot be reversed.

Uploading parameters from the device to the UNICARD/MFK (UL)

1. Access the installer parameters, entering the **PA2** password if enabled.
2. Scroll through the folders with ⌃ and ⌄ until you find the folder **FPr**
3. Press SET to confirm
4. Scroll through the parameters using ⌃ and ⌄ until you see parameter **UL** and press SET to confirm
5. If the operation is completed, the display will show **yES**, otherwise it will show **no**.

Downloading parameters from the UNICARD/MFK to the device (dL)

1. Access the installer parameters, entering the **PA2** password if enabled.
2. Scroll through the folders with ⌃ and ⌄ until you find the folder **FPr**
3. Press SET to confirm
4. Scroll through the parameters using ⌃ and ⌄ until you see parameter **dL** and press SET to confirm
5. If the operation is completed, the display will show **dLy**, otherwise it will show **dLn**.

Note: after downloading the data, the instrument will work with the settings for the loaded map straight away.

Downloading parameters from the UNICARD/MFK to the device (from reset)

Connect the UNICARD/MFK when the device is switched off. When the device is switched on, the data is downloaded automatically from the UNICARD/MFK to the device. After the lamp test, the display shows **dLy** if the operation was successful, otherwise it will show **dLn**.

Note: after downloading the data, the instrument will work with the settings for the loaded map straight away.

Boot Loader Firmware

Description

The device comes with Boot Loader, which makes it possible to update the Firmware directly on site. Updating takes place via UNICARD/MFK.

Operating mode

To carry out the update:

- Connect the UNICARD/MFK with the application loaded onto it
- Restore the device power, if it is off; otherwise, switch it off and on again
- Wait for the UNICARD/MFK LED to flash (operation in progress)
- The operation is complete when the UNICARD/MFK LED is:
  - **ON**: operation completed successfully
  - **OFF**: operation not completed (application incompatible …)

Terminal shared on Link2

Description

It is possible, from every device in a Link2 network and via the local terminal, to navigate within any of the other devices connected to the Link2 network.

Operating mode

To activate sharing, press and at the same time.

When remote displaying is active, the 2 icons **°C** and **°F** flash.

Note: you will be asked to enter the modbus address (**Adr**) for the remote device.

To return to the default menu:

- Press and hold for at least 5 seconds and
- Wait for the timeout (60 seconds) after the last time a key was pressed.

During the "remote display function", the local terminal (for the device display being viewed remotely) is locked.

Unlocking takes places 3 seconds after the display release. If during the “remoting” procedure the connection disappears, the display will show "**---**"

Electronic Expansion Valve (EEV)

Contents

This section includes the following topics:

Introduction 80
List of valves 81
Valve type 82
Refrigerant type 83
Local pressure transducer (4...20 mA) 84
Local ratiometric transducer 84
Pressure/ratiometric transducer shared via Link2 85
Ratiometric transducer shared via hardware 86
Remote backup saturation probe 86
Superheat probe 86
Protection fuse 87
Valve regulation parameters 89
EEV driver description 90
Manual EEV management 91
EEV driver regulation 92
RTX DOMINO ZERO Tuning 94

Introduction

The figure below shows a connection example for the device:

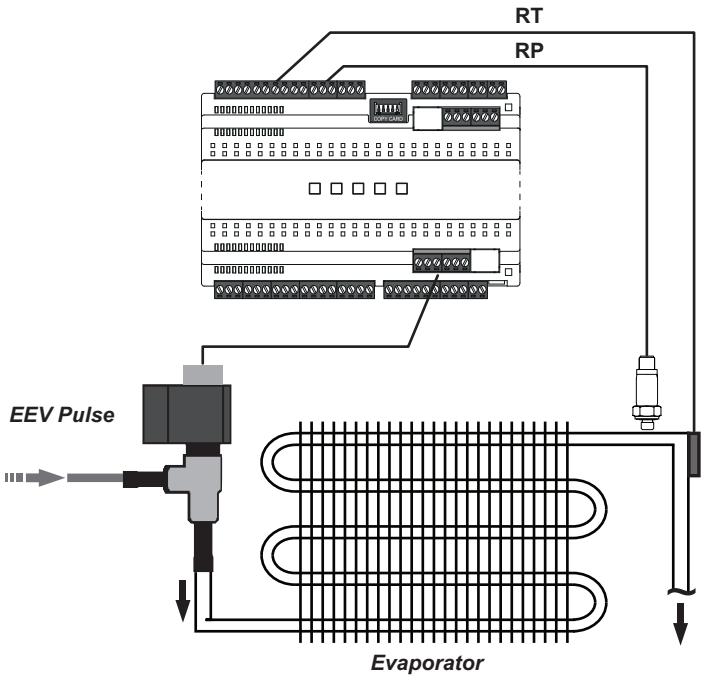

Legend: **RT** = Refrigerant temperature; **RP** = Refrigerant pressure; **EEV Pulse** = Pulse valve; **Evaporator** = Evaporator.

Use of the Pulse EEV requires configuration of the following resources:

- the superheat probe via parameter **rSS** (NTC/PTC/Pt1000 temperature probe)
- the saturation probe via parameter **rSP** (ratiometric or pressure transducer 4...20 mA).

The **DEFAULT** configuration includes the following settings:

- **Pb5** as superheat probe (NTC probe)
- **Pb6** as saturation probe (pressure transducer 4...20 mA).

Take extra care during the valve wiring stages. Choose the most suitable valve coil carefully in accordance with the voltage used.

⚠ WARNING

UNINTENDED EQUIPMENT OPERATION

Verify the information concerning valve parameters as declared by the manufacturer before using the valve in a generic valve configuration.

Failure to follow these instructions can result in death, serious injury, or equipment damage.

Schneider Electric and Eliwell are not responsible for data provided by the valve manufacturer, including technical changes or updates. Please refer to the valve manual to verify its suitability and correct configuration.

How to disable the EEV

If you don't use the EEV Valve or it is inoperable, it is possible to disable it by setting parameter **Ety** = 0.

List of valves

The following valves are **COMPATIBILE** with the device:

Manufacturer	Valve	Notes
Eliwell by Schneider Electric	PXV	Orifices from 0.5 to 2.7 mm

NOTE: The information below are presented in conformity with the technical documentation for the corresponding products listed in the table. Manufacturer specifications are subject to change without notice.

Manufacturer	Valve	Reference document
DANFOSS	AKV10, AKV15, AKV20	DKRCC.PD.VA1.A7.02_AKV_sw.pdf
	AKVA (NH3)	DKRCC.PD.VA1.B5.02_AKVA.pdf
ALCO	EX2	EN_EX2__35016.pdf

Schneider Electric and Eliwell are not responsible for data provided by the valve manufacturer, including technical changes or updates. Please refer to the product manual and the valve manual to verify its suitability and correct configuration.

Valve type

The device is designed for the management of AC and DC type “Pulse” valves.

The wiring diagram for Pulse electronic expansion valves is as follows:

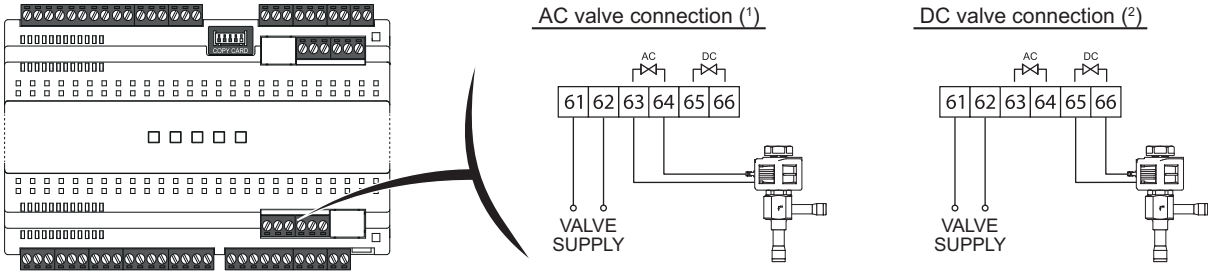

(1) = **AC valve connection**; (2) = **DC valve connection**

Before connecting the valve, configure the device carefully by selecting the type of valve used.

Schneider Electric and Eliwell are not responsible for data provided by the valve manufacturer, including technical changes or updates. Please refer to the product manual and the valve manual to verify its suitability and correct configuration.

NOTICE

INOPERABLE DEVICE

- Verify all wiring before engaging the electricity supply.
- Verify the rating data of the valve before connecting it.
- Make sure the valve coil is connected to the correct terminals.
- Make sure terminals 61-62 are connected to an AC power source with voltage of an RMS value suited to the type of valve used.

Failure to follow these instructions can result in equipment damage.

Note: The valve coil should be connected:

- to terminals 63-64 for valves in alternating current (AC)
- to terminals 65-66 for valves in direct current (DC).

Note: Connect terminals 61-62 to an AC power source with voltage of an RMS value:

- equal to the RMS value required by the valve coil if connected to an AC valve.
- equal to the DC value required by the valve coil if connected to a DC valve. For example, to control a valve with DC coil at 240 Vdc, you need to apply a voltage of 240 Vac RMS.

Refrigerant type

This device is designed to operate in non-hazardous locations and where applications which generate - or could potentially generate - hazardous atmospheres have been isolated. Install this device only in areas and with applications known to be free from hazardous atmospheres at all times.

⚠ DANGER

HAZARD OF EXPLOSION

- Install and use this equipment in non-hazardous locations only.
- Do not install or use this equipment in applications which could generate hazardous atmospheres, such as those using flammable refrigerants.

Failure to follow these instructions will result in death or serious injury.

For information regarding the use of control equipment in applications capable of generating hazardous materials, please contact the relevant national regulatory bodies or certifying authorities.

The device can operate with one of the following refrigerants, supplied in the device:

PAR.	Description	UM	Applications
Ert	Type of refrigerant. • **404** (0) = R404A • **r22** (1) = R22 • **410** (2) = R410A • **134** (3) = R134a • **744** (4) = R744 (CO2) • **507** (5) = R507A • **717** (6) = R717 (NH3) • **290** (7) = reserved • **407** (8) = R407A • **448** (9) = R448A • **449** (10) = R449A • **450** (11) = R450 • **513** (12) = R513A • **PAr_1** (13) = customizable 1 • **PAr_2** (14) = customizable 2 • **PAr_3** (15) = customizable 3 • **PAr_4** (16) = customizable 4 • **PAr_5** (17) = customizable 5 • **PAr_6** (18) = customizable 6 • **455** (19) = reserved **Note**: Contact Eliwell representative for customizable refrigerants.	num	410 (not in applications)

Note: parameter **Ert** is not included in Applications **AP1...AP8** and does not change if the default values are restored or an Application other than the default is loaded.

If you need to use a refrigerant that is not on the list, you can load the “refrigerant descriptor” (containing the key values corresponding to the refrigerant used) via UNICARD/Multi Function Key and then set parameter **Ert** = PAr_1, PAr_2, PAr_3, PAr_4, PAr_5 or PAr_6.

Note: To get the “refrigerant descriptor”, please contact Eliwell Technical Support.

Local pressure transducer (4...20 mA)

The wiring diagram for the pressure transducer is as follows:

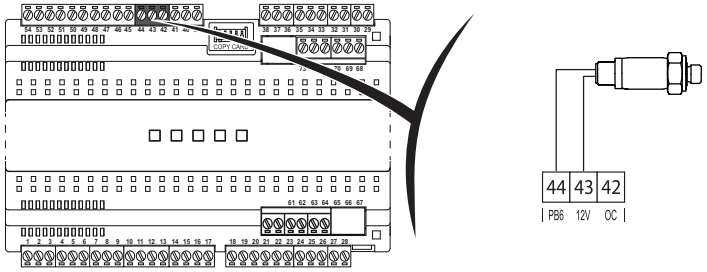

Set parameter **rSP**=Pb6 to use the 4...20 mA input (Pb6) as a saturation probe.

Set the lower limit (to 4 mA) and the upper limit (to 20 mA) using parameters **H03** and **H04**.

Note: Parameters **H03** and **H04** refer to relative pressure (atmospheric pressure = 0.0 bar).

Local ratiometric transducer

The wiring diagram for the ratiometric transducer is as follows:

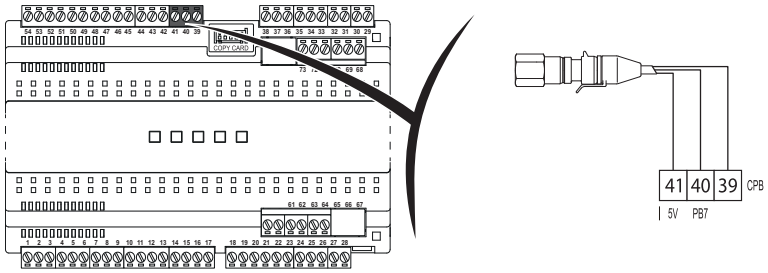

Set parameter **rSP**=Pb7 to use the ratiometric input (Pb7) as a saturation probe. Use parameter **trA** to set one of the ratiometric transducers listed:

PAR.	Description	UM	Applications
trA	Selects the model of ratiometric transducer used. • **USE** (0) = Generic Probe Set by customer • **rA1** (1) = EWPA 010 R 0/5 V 0/10 BAR FEMALE • **rA2** (2) = EWPA 030 R 0/5 V 0/30 BAR FEMALE • **rA3** (3) = EWPA 050 R 0/5 V 0/50 BAR FEMALE • **rA4** (4) = AKS 32R -1 ...6 BAR • **rA5** (5) = AKS 32R -1 ...12 BAR • **rA6** (6) = AKS 32R -1 ... 20 BAR • **rA7** (7) = AKS 32R -1 ... 34 BAR • **rA8** (8) = Reserved. **Note**: The upper and lower limits for probes **rA1**... **rA8** are preset (and cannot be changed), while if you select **USE** you will need to set them via parameters **H05** and **H06**.	num	USE (not in applications)

If the ratiometric transducer is not present in the presets, you can configure it manually by setting parameter **trA**=USE.

In this case, set the following parameters:

- **H05**: lower limit for the corresponding probe to 0.5 V (10%)
- **H06**: upper limit for the corresponding probe to 4.5 V (90%)

Pressure/ratiometric transducer shared via Link2

If the devices are connected in a Link2 network, one or two saturation sensors can be connected and their value shared.

EXAMPLE 1:

Sharing a saturation probe.

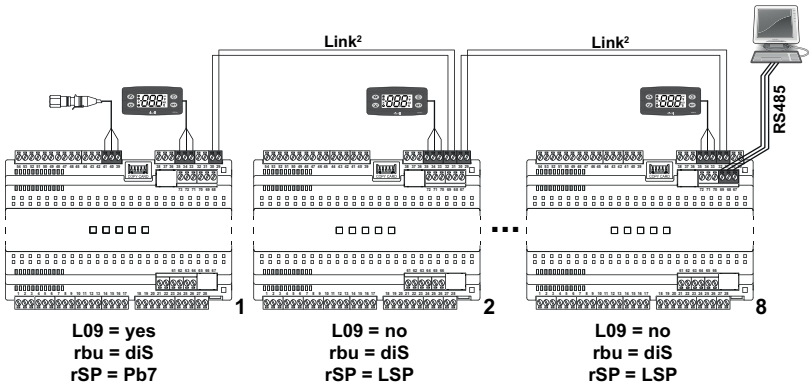

Update the saturation probe sent by the supervision system with a period that is 3 minutes shorter, otherwise the probe will be considered as being in error.

If the probe is in error, all devices will regulate according to the configuration created using the probe error parameters.

In the event of no-link, all Link2 devices, which are not capable of receiving the value from the device with the sensor fitted, will behave as though the saturation probe is in error.

EXAMPLE 2:

Sharing two saturation probes connected to two separate boards in the Link2 network (to increase the reliability of the system, in the event of a fault).

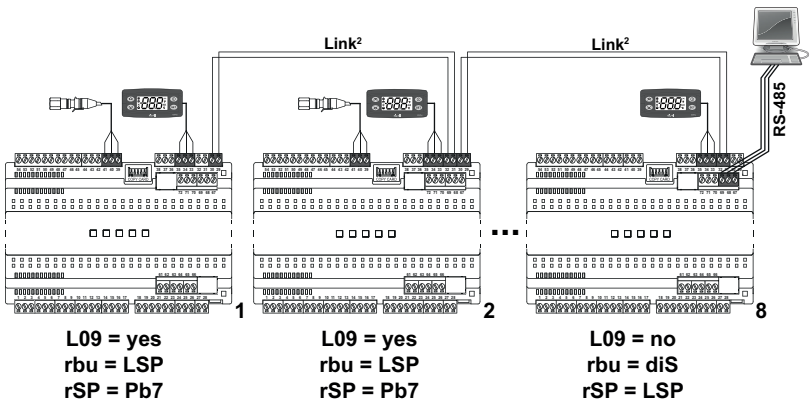

The Link2 will automatically share one of the two values available (the first value received). The other device, equipped with a pressure transducer, will not use the value shared, instead using the local value, unless it is in error, in which case the shared value will be used.

If the pressure transducer used for sharing enters error mode, the Link2 network will automatically take steps to share the pressure value of the other transducer (provided that this is not in error).

If both saturation probes are in error, or a no-link condition arises, the boards will take steps to regulate in accordance with the saturation probe inoperable scenario.

Ratiometric transducer shared via hardware

The wiring diagram for the shared ratiometric transducer is as follows:

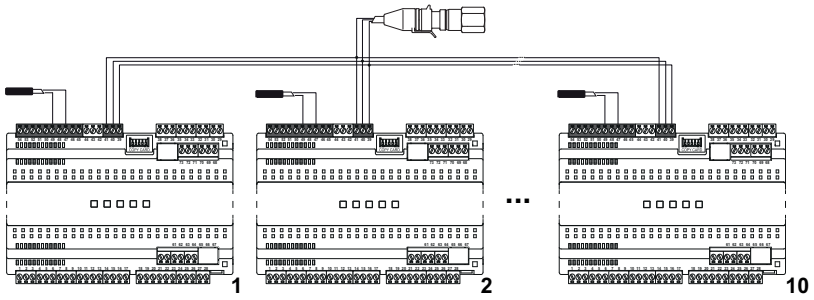

The ratiometric input is configured in exactly the same way as for the non-shared “Local ratiometric transducer”.

To use a shared ratiometric transducer (**Pb7**), set parameter **rSP**=rP.

Remote backup saturation probe

A backup saturation value can be sent to devices in the Link2 network via serial commands. If the device has no valid saturation value (local or shared), it can use the backup saturation value originating from a remote source.

If the remote device does not update the value within 3 minutes, the device will consider the backup probe as not available, so will regulate according to the conditions detected by the saturation probe in error.

Superheat probe

Position the superheat probe (you can select its type (NTC, PTC o Pt1000) using parameter **H00**) as shown in the figure.

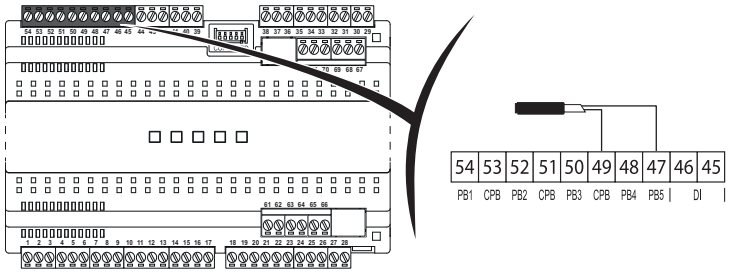

Protection fuse

The **RTX 600 /V** device has an internal fuse protecting it from the valve coils

If the fuse trips, it must be replaced.

⚠ ⚠ DANGER

HAZARD OF ELECTRIC SHOCK, EXPLOSION, FIRE OR ARC FLASH

- Disconnect all power from all equipment including connected devices prior to removing any covers or doors, or installing or removing any accessories, hardware, cables or wires.
- Always use a properly rated voltage sensing device to confirm the power is off where and when indicated.
- Before restoring the power supply, replace and secure all covers, hardware components and cables.
- For all the devices requiring it, make sure there is an effective ground connection.
- Use only the specified voltage when operating this device and any associated products.
- Use appropriate safety interlocks where personnel and/or equipment hazards exist.
- Install and operate this equipment in an enclosure appropriately rated for its intended environment and secured by a keyed or tooled locking mechanism.
- Do not use this equipment for safety-critical functions.
- Do not disassemble, repair, or modify this equipment.
- Do not connect the device directly to the line voltage, unless expressly indicated.

Failure to follow these instructions will result in death or serious injury.

⚠ DANGER

HAZARD OF OVERHEATING AND FIRE

Replace the fuse with a new one of the same type and specification. For specification details, please see the "Environmental and electrical characteristics" section of this document.

Failure to follow these instructions will result in death or serious injury.

When handling the equipment, take care to avoid damage caused by electrostatic discharge. In particular, the unshielded connectors are extremely vulnerable to electrostatic discharge.

⚠ WARNING

UNINTENDED EQUIPMENT OPERATION DUE TO ELECTROSTATIC DISCHARGE

- Keep the equipment in the protective packaging until ready for installation.
- The device must only be installed in type-approved cupboards and/or in points that prevent unauthorized access and provide protection from electrostatic discharge.
- When handling sensitive equipment, use a grounded device protecting against electrostatic discharge.
- Before handling the equipment, always discharge the static electricity from the body by touching an earthed surface or type-approved antistatic mat.

Failure to follow these instructions can result in death, serious injury, or equipment damage.

Replacing the fuse

The fuse replacement procedure is as follows:

1. Disconnect all removable terminals on the Top Board (electronic expansion valve and RS485 network).
2. Remove the cap using a screwdriver on the tabs on both sides.
3. Remove the fuse you want to replace from the Top Board
4. Insert the new fuse (**Note**: verify the correct size of the fuse in the section "Environmental and electrical characteristics")
5. Re-fit the cap, pressing evenly until you hear the side tabs click into place
6. Reconnect all the removable terminals on the Top Board.

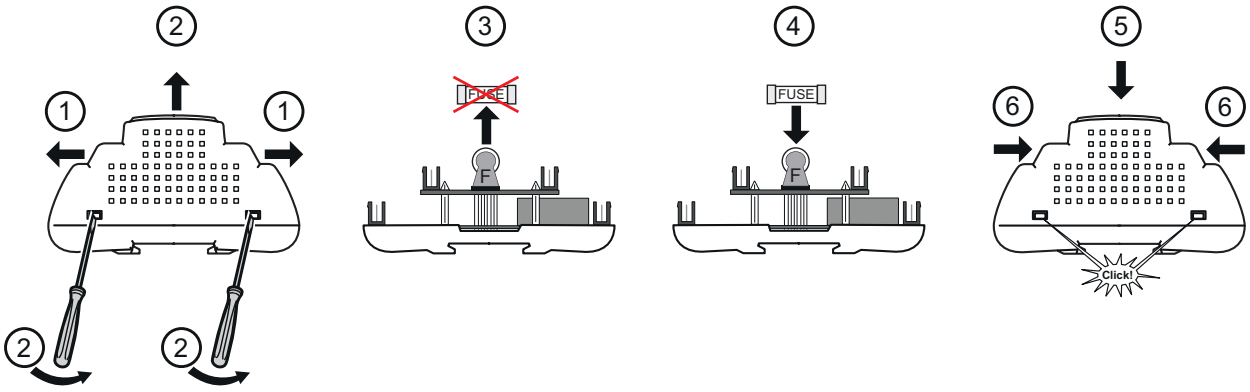

Valve regulation parameters

RTX 600 /V is a device for Pulse electronic expansion valves that regulates the minimum superheat value at the evaporator output.

The control algorithm can adapt itself to the counter conditions to achieve the performance levels desired by the user. The user will only be asked to set the setpoint temperature (**OLt**) and the algorithm will adapt itself to reach the desired performance levels. The algorithm is optimized for operation with low superheat setpoints.

The internal driver has user configurations that can be used to set:

- **U02**: the maximum valve opening percentage
- **U05**: the operating time at maximum opening before the alarm is triggered
- **U06**: the minimum useful valve opening percentage for modulation
- **U07**: the maximum useful valve opening percentage for modulation.

If regulation requires a value under **U06**, valve opening will be 0%, while if regulation requires an opening value over **U07**, the valve will be open at the value **U02**.

Notes:

- If the regulator controls an output greater than or equal to **U07**, the actual output will be equal to **U02**
- If the regulator controls an output less than or equal to **U06**, the actual output will be equal to 0%
- If the regulator controls an output greater than or equal to **U07** for a time period greater than **U05**, a maximum opening alarm will be generated to indicate a hazardous condition for the system.

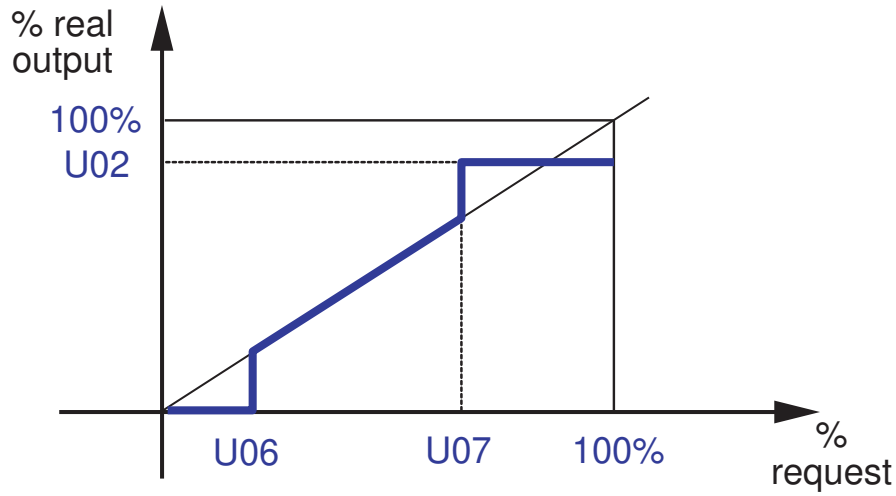

Legend: **% real output** = real output percentage; **% request** = request percentage.

EEV driver description

The driver has the following functions:

- **MOP**: for controlling the “maximum operating pressure” (can be activated with **HOE**).
- **Dead Rack**: for selective load disabling (can be activated with **U25**).
- **Continuous Modulation**: continuous control of EEV opening

Notes:

- Activation/deactivation of the EEV driver will run parallel to the compressor status
- the saturation probe should be connected directly to the device.
- Boards connected to Link2 can manage the shared saturation value as:
  - Regulation probe (local probe absent)
  - Backup probe (for use when the local probe is in error).
- Updating of the remote value for the saturation probe should be transmitted within 180 seconds (3 minutes), otherwise the probe will be considered to be in error.
- In continuous modulation, the compressor will always be on call, except when alarms are present.
- During a defrost period, the valve remains closed.

Force EEV closure from Digital Input or remote command, regardless of the regulation in progress and without any signaling.

The function can be activated remotely in two ways:

1. Using two separate commands:
   - A command to force EEV closure (see **nPV** command on Table of Modbus Resources)
   - A command to reactivate the EEV (see **oPV** command on Table of Modbus Resources).

   A timeout of 30 seconds is automatically reloaded when the device receives a EEV closure command. If the timeout expires, and the EEV is still in closing mode, it forces the reactivation of the EEV.

2. Writing two logic resources:
   - A function enabling timer: the EEV closure can be force only if the function enabling timer is counting. Timer is reloaded with the received remote value and timing.
     The timer is expressed in seconds (maximum value: 30'000 seconds).
   - A function status: **0** = EEV enabled; **1** = EEV forced closed.
     If the function enabling timer is elapsed, this variable is set to 0.

The driver has user configurations that can be used to set:

- **U02**: maximum EEV opening
- **U06**: minimum valve opening value during modulation as a percentage
- **U07**: maximum valve opening value during modulation as a percentage.

If regulation requires a value under **U06**, valve opening will be at 0%, while if regulation requires an opening value over **U07**, the valve will be open at the value **U02**.

If the valve opening percentage is above **U07** for a period greater than **U05**, the EEt alarm will be activated.

If the saturation temperature is greater than parameter **Hot** for a time greater than parameter **tAP**, the EEP alarm will be activated.

If there is an error in the saturation probe and the Link2 or remote backup probes are not available, the EES alarm will be activated.

MOP (Maximum Operating Pressure) function

The 'MOP' function for controlling the 'maximum operating pressure' can be activated by configuring parameter **HOE** and controls valve closure proportionally as the saturation temperature approaches the value of parameter **HOt** (maximum evaporator temperature), with a proportional band equal to parameter **HPb**.

MOP regulation can be disabled:

- using parameter **HOE**
- for a time period **HdP** on device startup or on returning from a defrost condition.

On returning from 'MOP' regulation, if **U65** > 0, the valve begin the regulation starting from a percentage threshold defined by the parameter **U64** (without any timeout).

Dead Rack (Maximum Operating Pressure) function

The 'Dead Rack' function (group of non-operational compressors) can be activated by configuring parameter **U25** and involves deactivating the loads selected using parameter **U25** when the saturation temperature is greater than the value of parameter **U26**.

The function has a hysteresis of 1°C or 1°F. This means is a high saturation temperature occurs (and therefore high pressure), the system considers the group of compressors as having malfunctioned and deactivates the loads selected by the user to avoid rapid defrosting of the products (the loads are: lights, frame heater, defrost, evaporator fan).

The deactivation of loads can also be controlled remotely.

One or both probes in error

If one or both probes are in error:

- If the pressure transducer is inoperable and **U22**= En (enabled), the saturation temperature backup value **U23** will be used. The MOP function will be disabled.
- if the pressure transducer is inoperable and **U22**= diS (disabled), the valve will be set to a fixed opening percentage **U8**. The MOP function will be disabled.
- if the temperature probe is inoperable , the driver will maintain a fixed opening percentage **U8** for the valve. The MOP function will be active, modulating the valve opening percentage in the range 0...**U8**.
- if the both probes are inoperable, the driver will maintain a fixed opening percentage **U8** for the valve.

Manual EEV management

The device can control the valve in manual mode.

There are two ways of doing so:

- management via the terminal.
- management via serial port with remote control.

Management via terminal

Activation takes place by configuring the parameter **A_F**=En, while the valve opening percentage is set with parameter **dUt**.

If there is no power supply or the system is switched off, it will restart with the function deactivated.

An hour after activation, the function will be deactivated automatically.

Management via serial port with remote control

Activation takes place by writing the logic resource at the address **H282F**.

The following settings can be applied:

- **0** = disable manual mode
- **1** = activate manual mode, with a 1 h timer from its activation
- **2** = activate manual mode, with reloading of the timer after 1 h and setting of the resource to 1. The desired percentage should be written at the logic resource for address **H2830**.

The manual function controls valve opening even when alarms are present, except if alarms relating to the EEV driver (**E13** and **E14**) are present.

EEV driver regulation

Fixed opening with temperature control off

If temperature control is off, a fixed opening percentage can be set for the EEV using parameter **U27**.

This function makes it possible to drain the evaporator.

Fixed opening at temperature control start-up

When temperature control begins, a fixed EEV opening percentage can be forced via parameter **U64**, in addition to its implementation period via parameter **U65**.

This function makes it possible to deactivate the superheat regulation algorithm for a specific period, allowing the system to “stabilize” and preventing low pressure alarms.

Once the delay **U65** has elapsed, the EEV will be controlled by the superheat algorithm.

Note: If **U65**=0, this function is disabled.

Continuous Modulation function

The "Continuous Modulation” function can be activated via parameter **rE**= 5 or **rE**= 6 and is activated when the counter reaches the temperature **SP1**, or in the case of energy saving, the temperature of the sum (**SP1+OS1**).

When the function is activated the driver regulates valve opening so that the temperature of the counter remains constant and that superheat is greater than the value set with parameter **OLt**.

This function reduces temperature fluctuations and makes it possible to work at a higher saturation temperature, increasing the efficiency of the system.

For further information see section Continuous modulation.

Superheat filter

This filter is used in systems with rapid changes in suction pressure or thermal load (e.g. in cold rooms), which cause rapid changes in superheat, requiring a “trigger” liquid injection.

This superheat filter (alpha filter) is active within the range (**OLt** - **U61**)...(**OLt** + **U61**) and uses an **alpha** coefficient = [0.9 + (**U51**/10000)]:

TshE = Current*(1 - alpha) + TshE*alpha

where:

- **TshE**: is the superheat temperature at the filter outlet.
- **Current**: is the current estimation of the superheat value

Recalculating the reference superheat

Parameter **U14** can be used to define the minimum value of the band used to calculate the valve implementation percentage (the lower the band value, the higher the reactivity of the system).

Low superheat threshold

The device can force the valve closure if the superheat is below the threshold **U67** for the time **U68**. The valve will be opened and return under control of the device only when the superheat returns above the **OLt** superheat setpoint and, if **U65**>0, the device will regulate starting from **U64** value (valve opening percentage).

Note: The value of parameter **U65** is not significative.

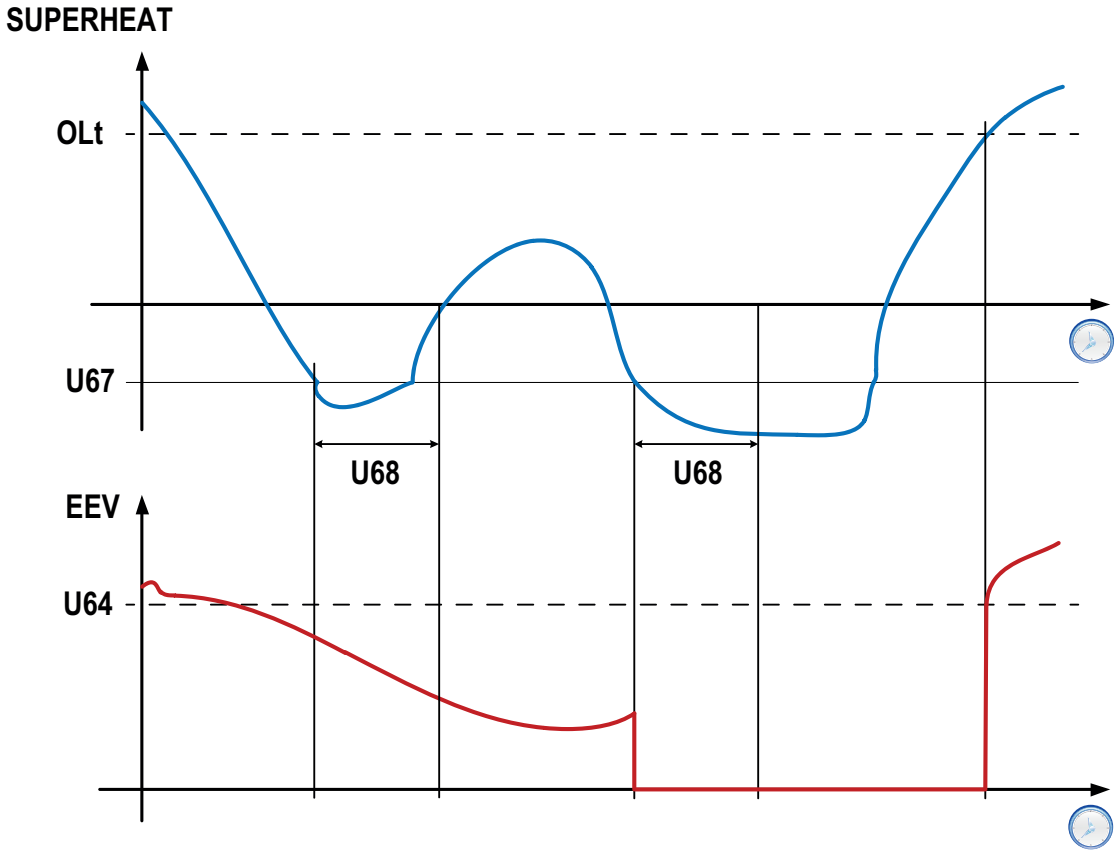

If **U68** = 0 the function is disabled.

Custom refrigerants

Up to 6 custom refrigerants can be stored in the memory. They are selected by configuring parameter **Ert** (values from 13 to 18 corresponding to the values from **par_1** to **par_6**).

RTX DOMINO ZERO Tuning

Introduction

The device managed a ‘Classic’ regulation and a ‘Soft superheat’ regulation.
The selection of superheat regulation method is made with parameter **U66**:

- **U66** = 0: select the 'Classic' regulation
- **U66** = 1: select the 'Soft superheat' regulation.

The selection of temperature control type is made with parameter **rE**:

- **rE** = 0: single thermostat
- **rE** = 1: dual thermostat in series
- **rE** = 2: dual thermostat in parallel
- **rE** = 3: reserved
- **rE** = 4: two independent regulators
- **rE** = 5: continuous modulation, single thermostat
- **rE** = 6: continuous modulation, dual thermostat in series.

Parameters:

Parameter	Description	Method of regulation	
		Classic	Soft superheat
rE	Temperature control type.	✓	✓
OLt	Minimum superheat threshold.	✓	✓
U13	Updating frequency for thermodynamic cycle values.	✓	×
U14	Gain coefficient. Superheat minimum transit band.	✓	✓
U20	Gain coefficient in continuous modulation.	✓	✓
U51	Superheat filter calculation coefficient.	✓	×
U56	Dynamic recalculation of refresh time.	✓	×
U60 & U61	Minimum/maximum superheat (SH) filter threshold.	**U60** < SH< **U61**	(**OLt**+4*__U60__) < SH < (**OLt**+4*__U6__1)
U66	Superheat regulation method.	**U66** = 0	**U66** = 1

'Classic' Regulation (U66 = 0)

Parameter	Description
U13	**U13** is the refreshes and recalculate time (**T**), in seconds, of the gain coefficient. Depending on the system thermal inertia value, the **U13** (1) value has to: • **Increase**: when the system has a high thermal inertia or a slowly changes of thermodynamic quantities • **Decrease**: when the system has a quick changes of thermodynamic quantities or high transients. (1) The value of **U13** has to be increased/decreased in accordance with the default value.

U14	**U14** is the gain coefficient of the thermodynamic model.
	The gain of the model value changes according to the inverse of the **U14** value:
	• **Quick response**: The reactivity to variations in suction pressure and superheat increase.
	If **U14** value decreases:
	  • the gain of the model increases
	  • the maximum opening range of the valve increases
	• **Slow response**: The reactivity to variations in suction pressure and superheat decrease.
	If **U14** value increases:
	  • the gain of the model decreases
	  • the maximum opening range of the valve decreases

Parameter	Description
U56	**U56** enable/disable an automatic dynamic recalculation of the time, in seconds, of the gain coefficient (see **U13**). • if **U56** = 0: the system use **U13** as fixed value for recalculation • if **U56** ≠ 0: the system perform a dynamic recalculation of the time **T**, in seconds, starting from **U13** value. The time **T** is recalculated: • fastly, if superheat move away from **OLt** value (**T** value decrease) • slowly, if superheat approaching **OLt** value (**T** value increase). 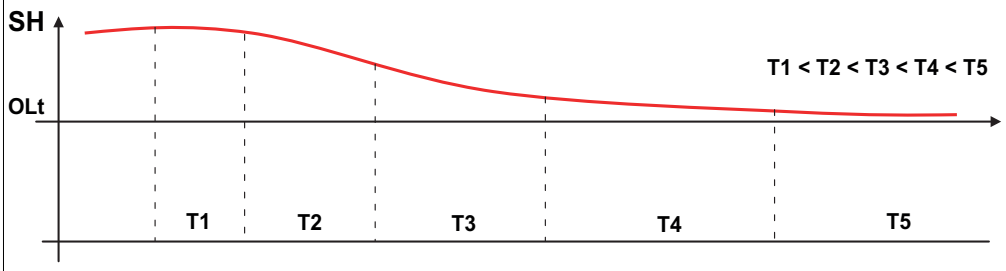 Examples (effect of **U56** on **U13**): • **Example 1**: **U13** = 15, **U56** = 5 and **OLt** = 5. **Effect**: **T** (maximum) = 15 seconds e **T** (superheat at 25K) = 9 seconds • **Example 2**: **U13** = 15, **U56** = 3 and **OLt** = 5. **Effect**: **T** (maximum) = 15 seconds e **T** (superheat at 25K) = 5 seconds 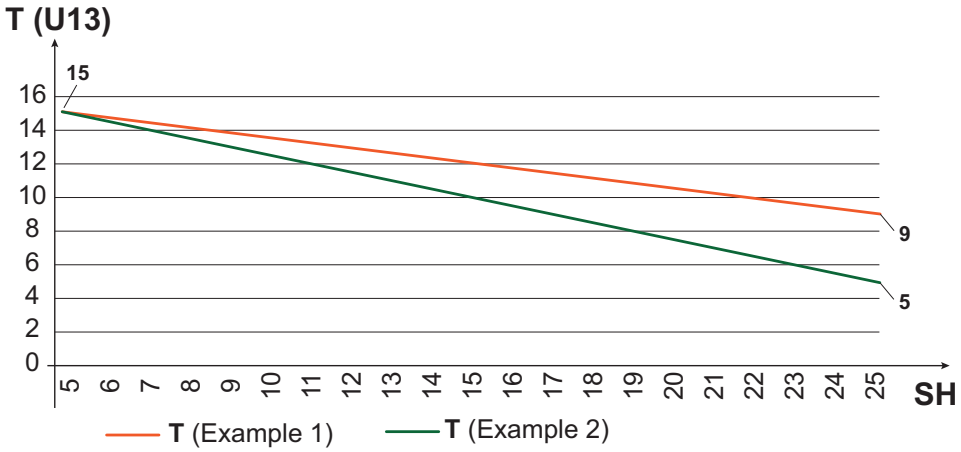 The more **U56** is decreased, the greater the variation of **T** according to superheat (SH). **Note**: Regardless of the value of **U56**, the recalculation time **T** can never be less than 10 % of **U13**.
U20	**U20** is the gain coefficient of the thermodynamic model in continuous modulation (Same as **U14**). **U20** is active only if **rE** = 5 or 6. **U20** perform when the temperature reaches **SEt** value, as long as the temperature remains within the interval (**SEt-dF1**)...(**SEt+dF1**)

Parameter	Description
U51	**U51** active the superheat filter. • if **U51** = 0 the filter is disabled • if **U51** increases, the filter on the superheat progress increase.
U60/U61	**U60** and **U61** set the operating band of the superheat filter (band: **U60** < superheat < **U61**). If the superheat temperature value is outside the range, the filter is not active. It filters superheat when the system regulation is unstable and it has sudden variations in the suction pressure. If the filter is too high, the system is not reactive enough with a risk of liquid return. ***NOTICE*** **HAZARD OF LIQUID RETURN** Not use this filter if your system work at a low superheat value. **Failure to follow these instructions can result in equipment damage.** 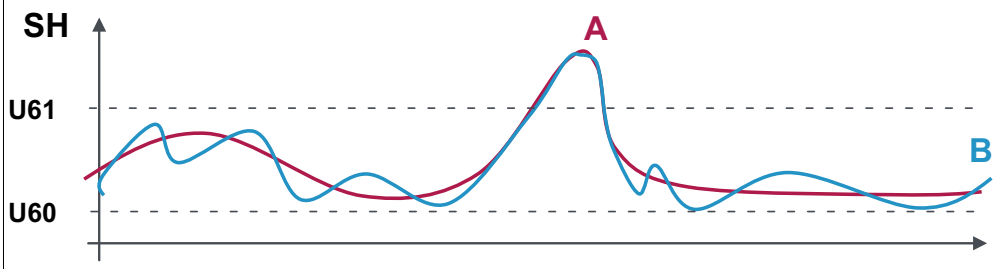 **Legend**: **A** = Superheat filter; **B** = Real superheat

'Soft superheat' Regulation (U66 = 1)

Parameter	Description
U14	**U14** is the gain coefficient of the thermodynamic model. **U14** increase the speed with which superheat tends to follow **OLt** value.
U20	**U20** is the gain coefficient of the thermodynamic model in continuous modulation.
U60/U61	**U60** and **U61** set the operating band of the superheat filter. Starting from parameter **OLt** value, the Soft superheat regulation is operating inside the band: **Th1**...**Th2**. 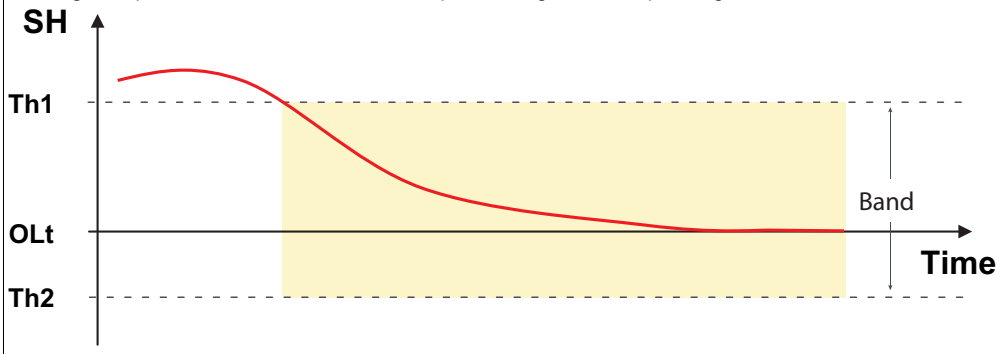 **Legend**: **Th1** = (**OLt** + 4*__U61__); **Th2** = (**OLt** + 4*__U60__); **Band** = operating band.

Quick Tips

Case	Regulation method	Description
Case 1	**Classic**	**Problem**: the EEV valve opening percentage limit is too low, despite having superheat far from **OLt**. **Solution**: decrease **U14** value until the desired opening is obtained. **Example of tuning sequence** (proceed by step): • set **U14** = 40 and verify the EEV valve opening percentage • if the EEV valve opening percentage is not acceptable, set **U14** = 20 and verify the EEV valve opening percentage • continue until the EEV valve opening percentage is acceptable.
Case 2	**Classic**	**Problem**: valve opening/closing, depending on superheat changes, too slow. **Solution**: decrease **U13** value until the opening / closing speed is acceptable. **Example of tuning sequence** (proceed by step): • set **U13** = 30 seconds and verify the EEV valve variation speed • if the EEV valve variation speed is still too slow, set **U13** = 15 seconds and verify the EEV valve variation speed • continue until the EEV valve variation speed is acceptable. After the **U13** tuning, set **U56** to stabilize the system when the superheat is close to **OLt**. **Note**: set **U56** = 5 (with a range that goes from 0 to 10).
Case 3	**Soft superheat**	**Problem**: the superheat settles at a superheat value lower than **OLt** but the valve continues to remain open **Solution**: increase **U60** value to narrow the smooth adjustment band. **Example of tuning sequence** (proceed by step): • set **U60** = -2 and verify if the EEV valve opening percentage is too high despite having superheat SH < **OLt** • if the EEV valve opening percentage is still too high, set **U60** = -1 and verify if the EEV valve opening percentage with superheat SH < **OLt** is sufficient • continue until the EEV valve opening percentage is near the closure (0 %) with superheat SH < **OLt**

Local Network

Contents

This section includes the following topics:

Introduction 99
Supervision gateway 99
Temperature probe sharing 100
Synchronized Defrost 101
Simultaneous Defrost 102
Sequential Defrost 104
Display shared on Link2 106
Setpoint value sharing 106
Sharing commands 107
Sharing buzzer and alarm silenced command 107

Introduction

Up to 8 devices can be connected in a Link2 network and just one device can be connected to the Modbus supervision network.

Link2 configuration takes place using the same addresses as the supervision system. No limitation is applied to the addresses (they may also be non-contiguous) and it is not necessary to configure a device as the primary.

The supervision system can be connected to just one device belonging to a Link2 network, which will function as a gateway for the other devices connected to the local network.

Every device will make the information regarding the number of devices connected available.

An example of Link2 + Supervision network connection is as follows:

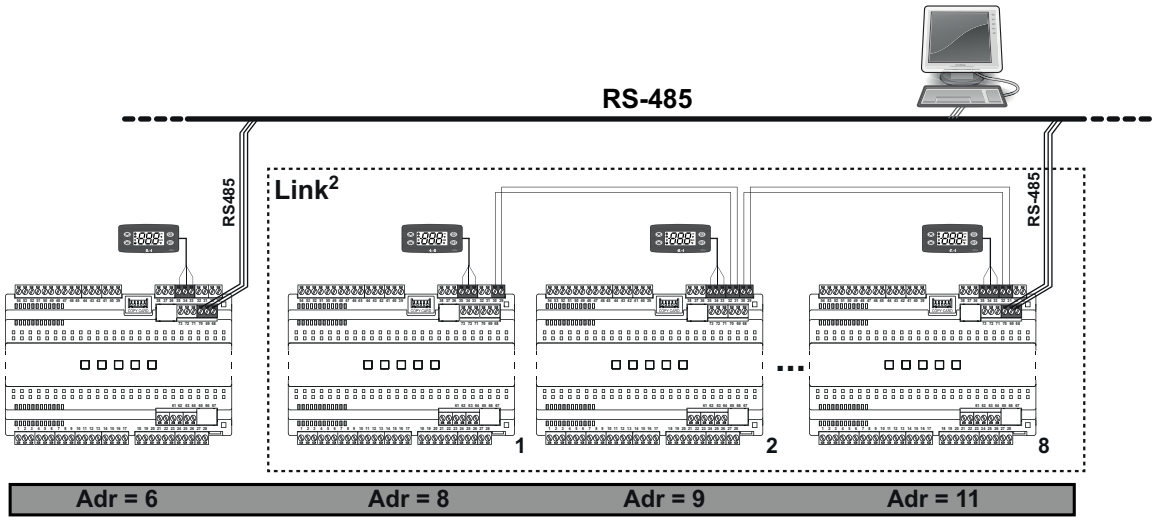

Supervision gateway

The RS-485 supervision line can be connected to any of the boards in the Link2 network. The latter will automatically take steps to “direct” communications to other boards.

The RS485 network does not require any specific configuration for addresses as it uses those already set for supervision of the network (parameter **Adr**).

Temperature probe sharing

The Link2 network can be used to share one of the 5 temperature probes (Pb1…Pb5) or the virtual probe.

The **L00** parameter set the temperature probe to share.

EXAMPLE 1:

Sharing the regulation probe (in the example, the probe is connected to device 2).

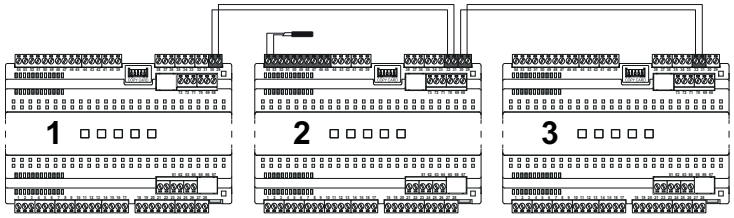

L00 = diS **rP1 = LP**	**L00 = Pb1** **rP1 = Pb1**	**L00 = diS** **rP1 = LP**

EXAMPLE 2:

Sharing the probe in a remote counter, where every section has its own regulation probe and one of the regulation probes is not working (in the example, the probe for device 2 which is marked with a red X).

In this case the section in question can be made to regulate using the value read from one of the adjacent sections. This process can be carried out remotely:

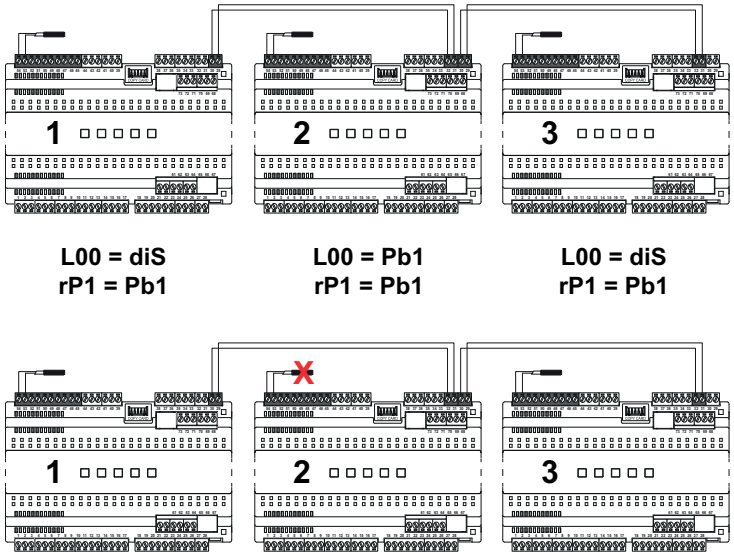

L00 = diS **rP1 = Pb1**	**L00 = Pb1** **rP1 = Pb1**	**L00 = diS** **rP1 = Pb1**
L00 = Pb1 **rP1 = Pb1**	**L00 = diS** **rP1 = LP**	**L00 = diS** **rP1 = Pb1**

Note: The sharing of the temperature probe does not apply only to temperature regulation, but also for other regulators (evaporator fans, heating elements, etc.).

Synchronized Defrost

Definition

Defrosts can be synchronized in a local Link2 network with respect to the actual defrost phase. The dripping phases are not taken into account.

Within it there is a primary device (the one connected to the Modbus supervision network) and secondary devices (the other instruments in the local Link2 network).

The primary device (**L03**≠0) is limited to sending enabling commands for starting defrosts or temperature control without interfering with the protections or delays configured on each individual device (e.g. dripping, etc.).

Once a secondary device has finished its synchronized defrost, it waits to receive enabling for temperature control from the primary device and in the meantime its defrost icon flashes.

If the secondary devices in the local Link2 network are programmed to accept commands from the primary device, any defrosts and/or functions required by the device will not be activated, with the exception of the following defrosts:

- manual
- from Televis
- following a deep cooling cycle.

Associated defrosts and/or functions will only be carried out by the secondary devices if a “no link” alarm is present (E7).

Operating conditions:

- in a local network, defrost commands and activation of the functions associated with the events are controlled exclusively by the primary device (if the secondary devices are programmed to do so)
- if there is no communication, every element in the network works individually for the cooling chain.

A safety mechanism can be set on secondary devices that locally forces a defrost if they do not receive a defrost command from the primary device within the timeout period **dit** (with **dit**≠0). The timeout is reset at every defrost.

Note: If **dit**=0 this safety mechanism is disabled.

There are two types of defrost, linked to the value of **L03**:

- **L03** = 1: simultaneous defrost
- **L03** = 2: sequential defrost

Parameter **L04** can be used to indicate whether, once defrost is complete, the device waits for all the others to finish before being able to reactivate regulation.

This means there is still a timeout that forces reactivation of regulation once a time period set with **L10** elapses (e.g. the Link2 network line is interrupted while a defrost is in progress).

Simultaneous Defrost

In a Link2 network it is possible to activate defrosts simultaneously, coordinated by the nominated primary device, by setting **L03**=1.

The primary device will send a defrost request to all devices defined as secondary devices simultaneously.

At the end of the defrost, temperature control will be activated based on parameter **L04**:

- if **L04**=ind it will resume after every defrost and corresponding period **dit** has ended
- if **L04**=dEP it will resume after all defrosts and corresponding periods **dit** have ended.

Operating diagrams

Independent simultaneous defrost (L04 = ind)

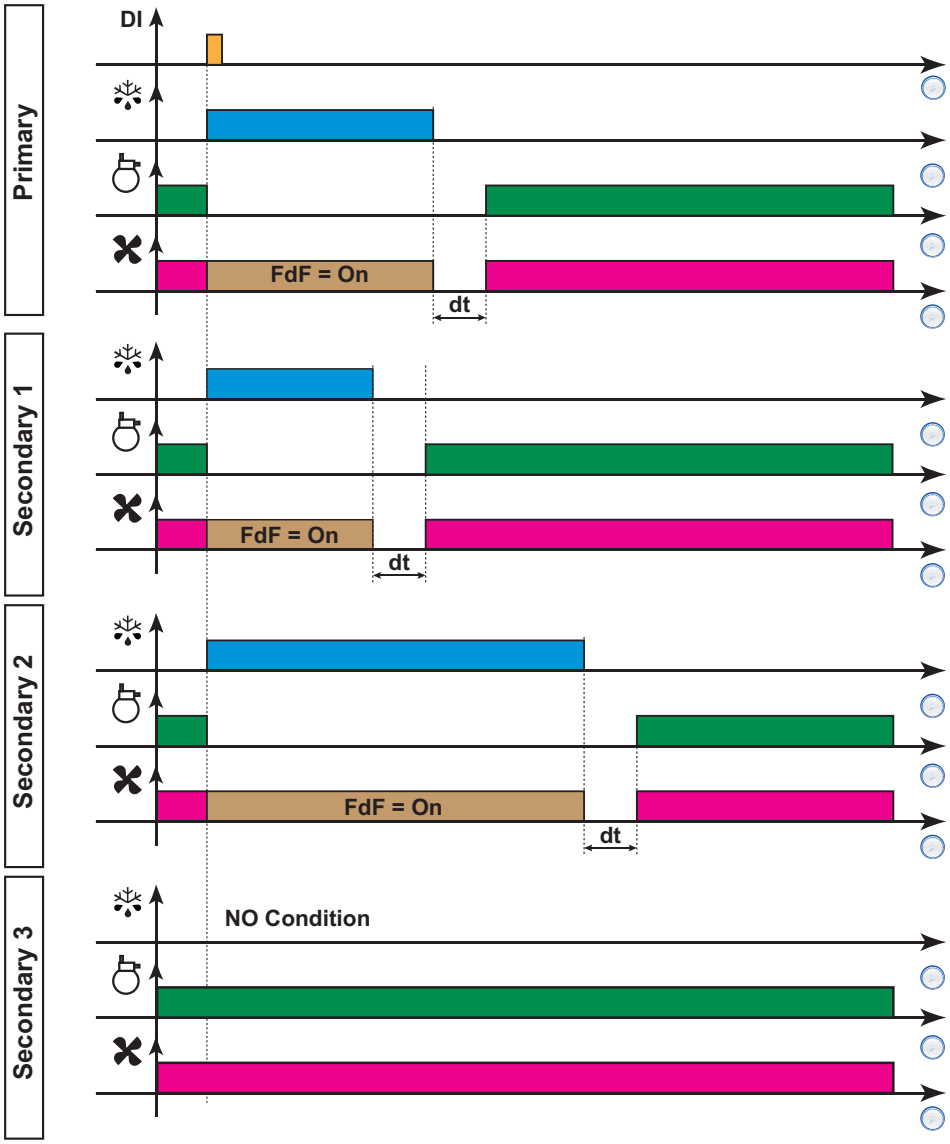

Dependent simultaneous defrost (L04 = dEP)

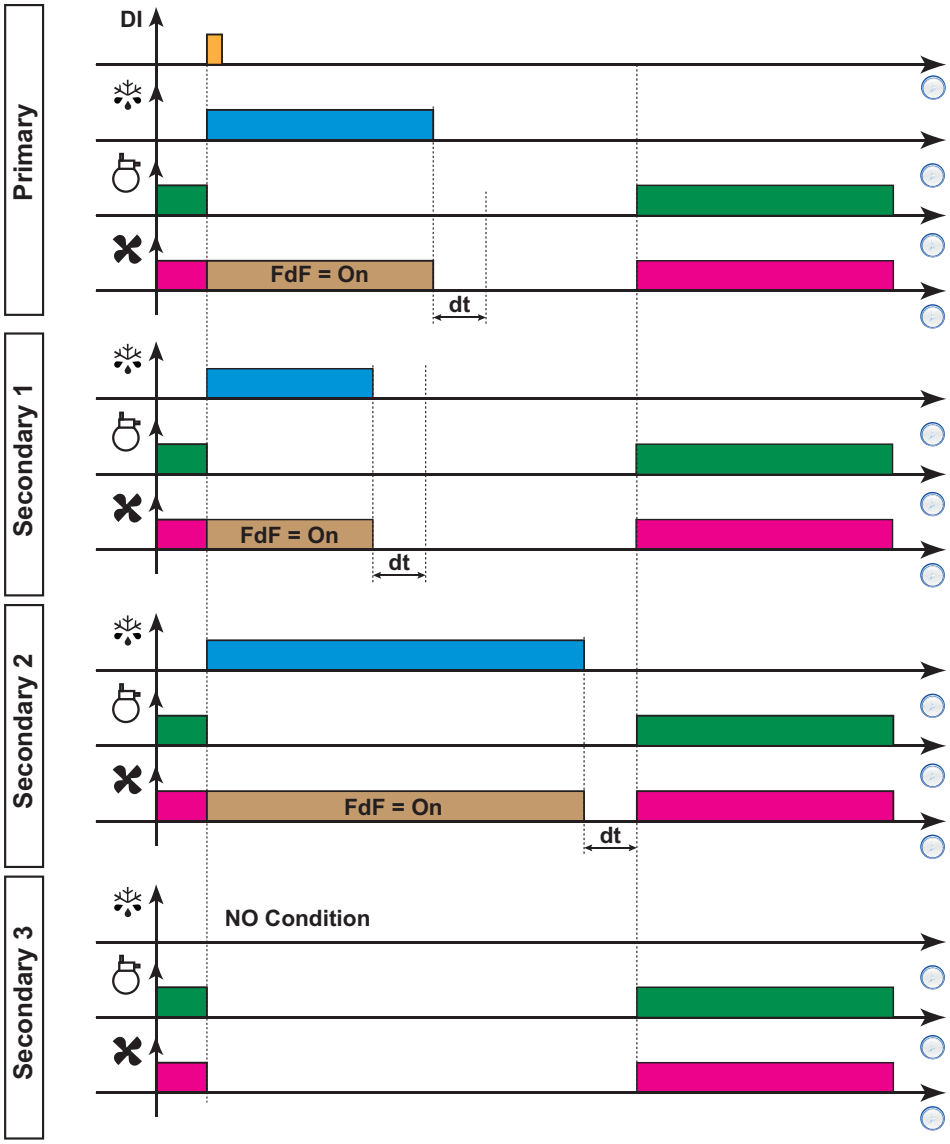

Legend:

- **DI** = Digital Input
- ❄ = Defrost
- = Compressor
- = Fans
- **NO Condition** = The conditions for defrosting are not met
- **Primary** = Primary device
- **Secondary** = Secondary device

Sequential Defrost

In a Link2 network it is possible to activate defrosts sequentially, coordinated by the nominated primary device, by setting **L03**=2.

The primary device will send a sequential defrost request to all devices defined as secondary device.
The defrosting order depends on the sequence in which the devices were recognized at the last power-on. The sequence may vary.

At the end of the defrost, temperature control will be activated based on parameter **L04**:

- if **L04**=ind it will resume after every defrost and corresponding period **dit** has ended
- if **L04**=dEP it will resume after all defrosts and corresponding periods **dit** have ended.

Operating diagrams

Independent sequential defrost (L04 = ind)

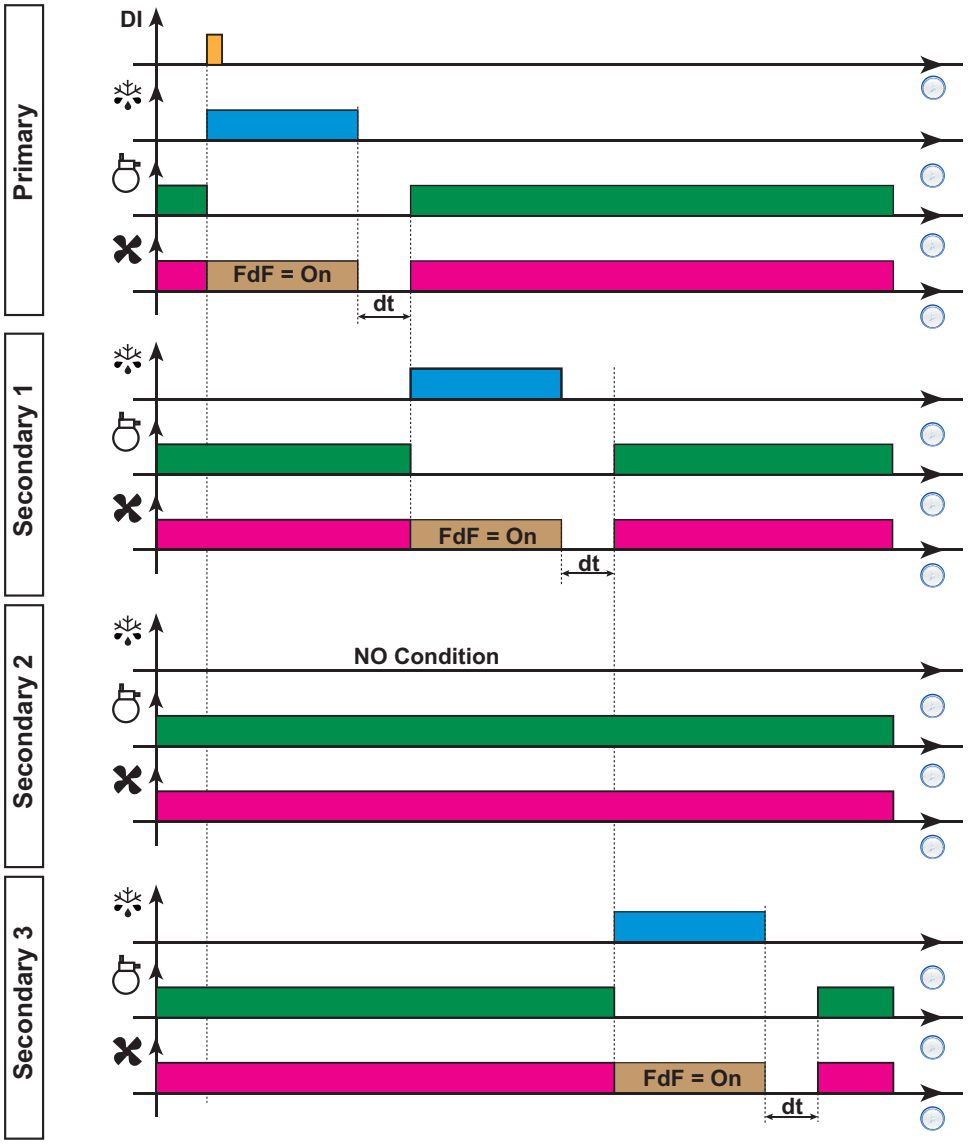

Dependent sequential defrost (L04 = dEP)

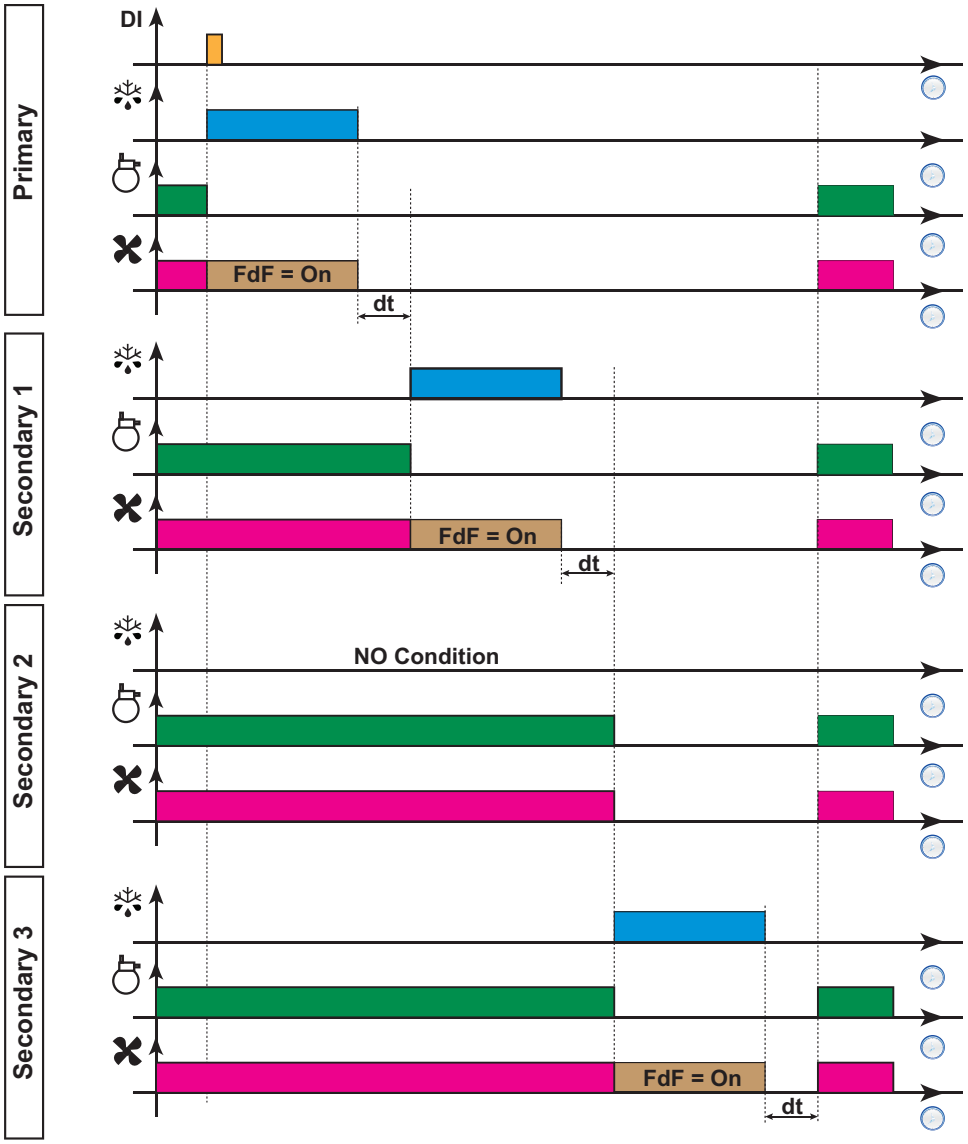

Legend:

- **DI** = Digital Input
- ❄ = Defrost
- = Compressor
- = Fans
- **NO Condition** = The conditions for defrosting are not met
- **Primary** = Primary device
- **Secondary** = Secondary device

Display shared on Link2

To ensure that all terminals for the remote counter display the same value, the display of a certain device can be shared via the Link2 network.

EXAMPLE:

In the example, all terminals will display the value of device 2.

Devices no.1 and no.3 will display the value of the probe fitted on device 2, which was selected via parameter **ddd**.

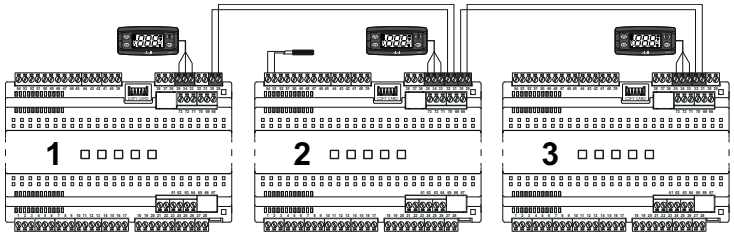

L01 = 2 **L01 = 1** **L01 = 2**

Notes:

- If device 2 (which is sharing its value with the local network) has an active alarm indication on the display (e.g. probe alarm), this is not shared with devices 1 and 3
- If device 2 shares the value of a probe that is not working, the other devices will display the value selected by local parameter **ddd**
- If device 1 and/or device 3 have additional alarm signals (e.g. local probe alarms), these are only displayed locally
- If device 1 and/or device 3 do not receive the probe value from device 2 due to a lack of signal in the Link2 network, they will display the value selected by local parameter **ddd**.

Setpoint value sharing

The Link2 network can be used to share regulation setpoint **SP1** between all boards. If the setpoint is changed on any of the boards in the Link2 network, all the other boards in the local Link2 network will be updated automatically (if **L02**=yES).

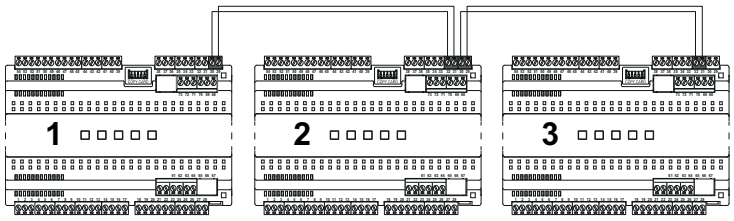

L02 = yES **L02 = yES** **L02 = yES**

Note: When parameter **L02**=yES, if the value of a setpoint is changed on any of the devices, that value will be propagated to all other devices in the network. If one of the devices is disconnected from the network or communication is lost, after the setpoint value is changed it will use the new value set.

Sharing commands

The Link2 local network can be used to share the following commands:

- Stand-By
- Lights
- AUX
- Energy Saving
- Buzzer
- Alarm silenced command

(See parameters **L00** ... **L15** in the folder Lin)

Sharing buzzer and alarm silenced command

The Link2 local network can be used to share the buzzer and the alarm silenced command.

The parameter **L15** sets the device functioning mode and how to share buzzer and alarm silenced command via Link2:

- **0** = function disabled
- **1** = main board
- **2** = remote board (shares buzzer and alarm silenced command with main board)

The parameter **L15** can be used to manage the cumulative alarms status of all remote devices connected to the 'main board'.

This management shares:

- alarm icon status
- buzzer status
- alarm relay status

If **L15** = 1 and at least one of the 'remote board' has an active alarm, the display of the 'main board' shows the label **LnA** alternatively to the main display and the alarm is added to folder **ALr**.

If the device is set as 'main board', it activates buzzer and alarm icon for local alarms and received remote alarms.

Defrost

Contents

This section includes the following topics:

Defrost/Dripping 109
Display and alarm operation 110
Automatic Defrost 111
Manual defrost 112
RTC Defrost 114
Electric heater defrost 116
Inversion defrost 118
Hot gas defrost for plug-in systems 120
Hot gas defrost for systems with remote group 121
Modulating electric heater defrost: Smart Defrost 122
Dual evaporator defrost 123

Defrost/Dripping

Activation

Defrosting removes ice from the surface of the evaporator.
If **dt** ≠ 0, once defrost is complete, a dripping cycle takes place to prevent the water left on the evaporator from freezing again.

Defrost is activated:

- automatically (depending on the mode selected with **dCt**) from:
  - compressor run time (Digifrost)
  - device run time
  - compressor stop
  - RTC (if the RTC is not working device run time is used instead)
  - by temperature: when the evaporator temperature is lower than the defrost end setpoint **dSS** for a time period **dit** (not applicable for dual evaporator systems).
- press and hold a key (configured with **H3x** = 1)
- digital input (**DI**) (only if **H1x** = ±1)
- using a Supervisor, via Modbus command (serial)
- via Link2 network

To select the defrost type, set parameter **dty** (defrost type).
Defrost takes place due to the evaporator heating up, in one of the following ways:

dty value	Defrost mode
0	Electric heater defrost
1	Inversion defrost
2	Hot gas defrost for plug-in systems
3	Hot gas defrost for systems with remote group
4	Modulated electric heater defrost (Smart Defrost)

Operating conditions

Defrost does NOT start automatically and the display will flash three times if:

- a manual defrost is already underway.
- the defrost activation timer has elapsed and the temperature of the first evaporator is higher than the defrost end setpoint **dS1** (**dS2** for defrost on the second evaporator), in which case a new timer count will begin.

Defrost can take place in the ways listed below:

Method	Conditions
Device switch-on	if parameter **dPO**=1 (defrost at start-up)
Time intervals	every time the defrost time interval **dit** elapses (if **dit**>0).
Manually (via key)	press and hold a key for at least 5 seconds if enabled (**H3x**=1). If **OdO**≠0, the cycle does not begin, the request is rejected and the display will flash three times to indicate that defrosting is not possible.
External request via DI	By activating a suitably configured DI (**H1x**=1). Activation via DI observes the automatic cycle protections. If **OdO**≠0, the cycle does not begin, the request is rejected and the display will flash three times to indicate that defrosting is not possible.

Setting the dripping interval

To activate dripping at the end of the defrost cycle, set parameter **dt** ≠ 0. During dripping, the fans are switched off even if **Fdt** < **dt**.

Parameters

Parameter	Description
dS1	Temperature value set for the end of defrost on evaporator 1.
dS2	Temperature value set for the end of defrost on evaporator 2.
Fdt	Fan activation delay after a defrost.
dt	Dripping duration.

Display and alarm operation

Alarm operation during defrost

You can activate an alarm for defrost ending due to timeout, by setting parameter **dAt** = y (see alarm **Ad2** in the Alarms and indications section).

In the event of a regulation probe error, defrosts will still take place and, during defrost, the temperature alarm associated with the probe error will be excluded.

Displayed values

By setting parameter **ddL**, you can choose the values displayed during the defrost phase until the end of dripping time.

The value shown on the display may be configured in one of the following ways:

- **ddL** = 0: display the temperature read by the regulation probe
- **ddL** = 1: display the temperature read by the regulation probe at the start of defrost
- **ddL** = 2: display (steadily) the label **dEF** (defrost)

Unlocking the display

The display can be unlocked in one of the following ways:

- on reaching the setpoint and after dripping
- on reaching the display unlock timeout value, defined by parameter **Ldd**

Parameters

Parameter	Description
dAt	Defrost ended due to timeout alarm indication.
ddL	Display mode during defrosting.
Ldd	Display unlock timeout value - label **dEF**.

Automatic Defrost

Introduction

The defrost cycle begins at set intervals.

Note: To stop automatic defrosts from taking place, set **dit**=0.

Operating conditions

If **dit**>0, defrosts will take place at fixed intervals as per **dit** and interval time counting will be calculated as follows:

Par.	Value	UM	Description	Notes
dCt	0	num	Defrost disabled	-
	1	num	Compressor running time --- DIGIFROST® method	The count is active only when the compressor is on. When the defrost interval elapses a new count begins and a defrost cycle starts if the conditions for doing so are met. **Note**: the compressor running time is counted independently of the evaporator temperature. If the evaporator probe is missing or not working, the count will still be active in the compressor running period.
	2	num	Device running time	The defrost interval count is always active when the device is on and starts at every power-on. When the defrost interval (**dit**) elapses, a defrost cycle starts if the conditions for doing so are met, along with the count for a new defrost interval.
	3	num	Compressor stop	Each time the compressor stops, a defrosting cycle is performed in the mode established by parameter **dty**.
	4	num	RTC (clock)	The clock can be used to set: • defrost schedules (6 bands for weekdays and 6 bands for weekends/holidays) • regular defrost (every n days) • daily events (1 event for weekdays and 1 event for weekends/holidays) Time band and regular defrosts work in a mutually exclusive manner (they do not work at the same time). If defrost using RTC is activated and the clock is not working, defrost will run according to **dit** (as long as **dit**≠0).
	5	num	Temperature	The defrost is activated when the evaporator temperature drops below the threshold **dSS**. If probe **dP1** is not working, defrost takes place on the basis of interval **dit**.

Defrost does NOT start automatically and the display will flash three times if:

- a manual defrost is already underway.
- the defrost activation timer has elapsed and the temperature of the first evaporator is higher than the defrost end setpoint **dS1** (**dS2** for defrost on the second evaporator), in which case a new timer count will begin.

Manual defrost

Introduction

The Manual Defrost function can be activated in one of the following ways:

- press and hold a key (configured with **H3x** = 1)
- digital input (**DI**) (only if **H11** = ±4)
- using a Supervisor, via Modbus command (serial)

Note: if the **OdO** count is in progress, the defrost cycle does not begin, the request is rejected and the display will flash three times to indicate that defrosting is not possible.

Activation via key

The device enters defrost after you press and hold a key only if **H3x**=1.

The defrost interval count proceeds as described in Automatic defrost, where time period **dE1** is not reset but instead continues.

Defrost does NOT start automatically and the display will flash three times if:

- a manual defrost is already underway.
- the defrost activation timer has elapsed and the temperature of the first evaporator is higher than the defrost end setpoint **dS1** (**dS2** for defrost on the second evaporator), in which case a new timer count will begin.

Defrost is always enabled apart from when **dit**=0.

Activation via Digital Input

The device enters defrost when a Digital Input is activated only if **H11**= ±4.

Note: defrost activation takes place upon closure (H11 >0) or opening (H11<0) of the digital input DI (if activated). You can only activate a defrost, not end an active one. Any defrost or dripping cycle in progress and the defrost or dripping time cannot be suspended.

Note: with **dS1** the defrost end time due to reaching the Setpoint temperature is indicated and with **dE1** the defrost ends due to timeout is indicated.

Regulation examples

Example 1 (H11 = 4):

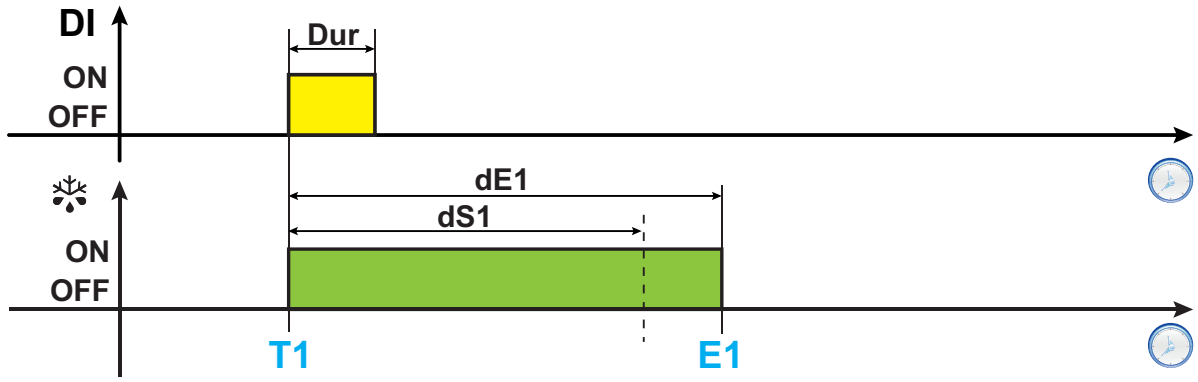

Example 2 (H11 = 4):

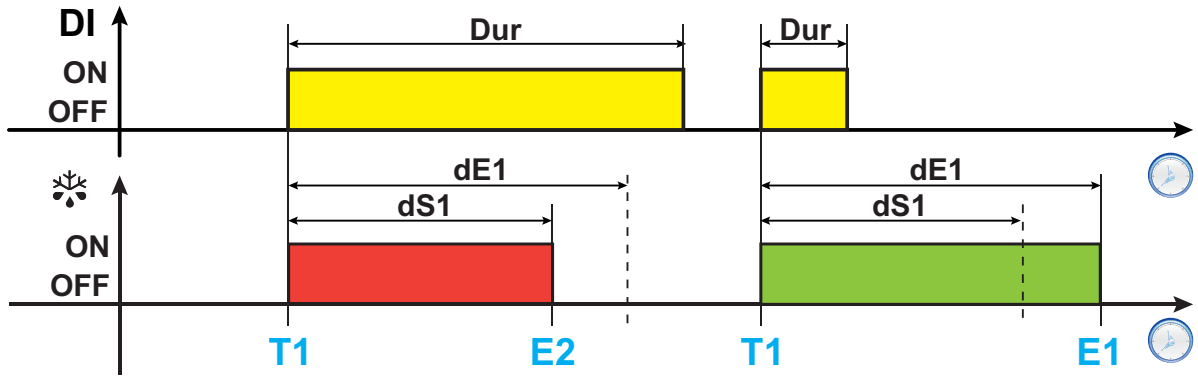

Example 3 (H11 = 4):

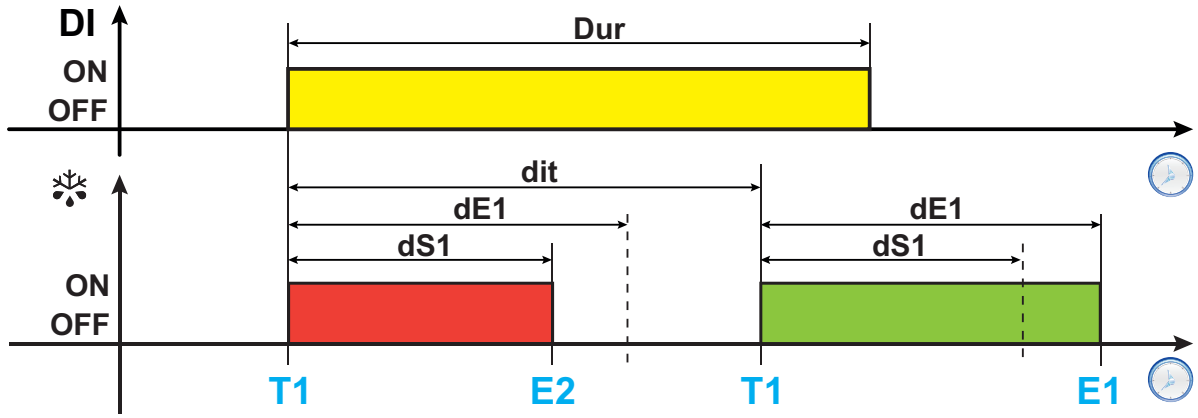

Legend: **Dur** = DI Duration; **DI** = Digital Input; ❄ = Defrost; **T1** = Defrost request; **T2** = Regular defrost request with fixed expiration; **E1** = Defrost end due to timeout; **E2** = Defrost end due to temperature.

Parameters

Parameter	Description
dit	Time interval between one defrost and the next.
dE1	Evaporator 1 defrost timeout.
dE2	Evaporator 2 defrost timeout.
OdO	Output activation delay time from switching on the device or after a power outage.
dS1	Evaporator 1 defrost end temperature.
dS2	Evaporator 2 defrost end temperature.
H1x	Digital input **x**/polarity configuration.
H3x	**x** key configuration.

RTC Defrost

Weekdays/Weekends and Holidays

The controller can manage up to two weekend/holiday days. They can be selected via parameters **Fd1** and **Fd2**.

For example:

- **EXAMPLE 1**: 1 weekend/holiday day (Monday).
  Set: **Fd1**=1 (Monday), **Fd2**=7 (disabled)
- **EXAMPLE 2**: 2 weekend/holiday days (Wednesday and Sunday).
  Set: **Fd1**=3 (Wednesday) and **Fd2**=0 (Sunday) or **Fd1**=0 (Sunday) and **Fd2**=3 (Wednesday)

Time band defrost

The controller can manage up to 6 daily defrosts, with two setpoints, one for weekdays and one for weekends/holidays.

In addition to defrost start schedules, you can decide whether to use a defrost end setpoint and timeout that are the same for all defrosts, or to set different values for each event.

- If **Edt**=0, each time band will use the same set defrost end **dS1** (**dS2**) and the same timeout **dE1** (**dE2**).
- If **Edt**=1, a specific setpoint **dS1** and timeout **dE1** can be set for each event.

This means that longer and/or more intensive defrosts can be set during store closure periods (when the thermal load on the counters is lower). This mode is recommended for systems with single evaporator defrosting.

For dual evaporator defrosting, all defrosts use the same **dS2** and **dE2** and these values cannot be customized.

The following structure is used when setting the time:

Min	Current schedule: minutes.	0...59	min	**H68**=y
Hur	Current schedule: hours.	0...23	hours	**H68**=y
dAY	Current schedule: day. **0**: Sunday; **1**: Monday; **2**: Tuesday; **3**: Wednesday; **4**: Thursday; **5**: Friday; **6**: Saturday.	0...6	num	**H68**=y

Regular defrost

Some counters only require a defrost cycle every two days or longer.

This is possible using the set of parameters relating to regular defrost, where the activation schedule and repeat interval (in days) is set.

Multiple defrosts

Parameters **Fdn** and **Ffn** can be used to carry out several defrosts at regular intervals over the course of the day, only setting the time band for the first defrost.

This mode is active when:

- For weekday defrosts **Fdn**≠0 and **d1H**≠24
- For weekend/holiday defrosts **FFn**≠0 and **F1H**≠24

For example, if **Fdn**=8 and the first time band is set to 2:00, the following will occur:

- First defrost at 2:00
- Second defrost at 5:00 (2:00 + 24h/Fdn)
- Third defrost at 8:00 (2:00 + 2*(24h/Fdn)
- …
- Eighth defrost at 23:00 [2:00 + 7*(24h/Fdn)]

Note: if one or more defrosts are calculated for the day after the first defrost they will be ignored.

Events

The controller can manage two specific events, one applicable to weekdays and one to weekends/holidays. These events have a start time and a duration.

A typical example would be store closure periods when, through events, it is possible to automatically switch off the light, close the shutters, increase the setpoint and implement other energy saving functions.

This result can be achieved by indicating the time at which the store will close, while the duration of the event is simply the duration of the period of closure.

Depending on the value of parameter **ESt**, each event can carry out one of the following functions:

- **ESt** = 0: Function disabled
- **ESt** = 1: Energy Saving activation (*)
- **ESt** = 2: Energy Saving activation (*) and Light off
- **ESt** = 3: Energy Saving activation (*), Light off and AUX output activation
- **ESt** = 4: Device Stand-by activation
- **ESt** = 5: Energy Saving activation (*) + Buzzer silencing
- **ESt** = 6: Energy Saving activation (*) and Light off + Buzzer silencing
- **ESt** = 7: Energy Saving activation (*), Light off and AUX output activation + Buzzer silencing
- **ESt** = 8: Device Stand-by activation + Buzzer silencing

(*) for functions associated with Energy Saving, refer to the specific section.

Parameters

Parameter	Description
dE1	Defrost 1 timeout.
dE2	Defrost 2 timeout.
dS1	Defrost 1 end temperature.
dS2	Defrost 2 end temperature.
Fd1	1st weekend/holiday day.
Fd2	2nd weekend/holiday day.
Edt	Sets whether you want to enter a duration and defrost end temperature for each event
Fdn	Number of multiple defrosts during one weekday.
FFn	Number of multiple defrosts during one weekend/holiday day.
d1H	1st weekday defrost start hour.
F1H	1st weekend/holiday defrost start hour.
ESt	Type of event activated via RTC.

Electric heater defrost

Electric heater defrost is used in "**LOW TEMPERATURE**" applications and is selected by setting **dty** = 0.

When electric heater defrost is activated:

- The compressor stops
- the relay to which the electric heaters are connected, configured as defrost regulator output, is activated

At the end of defrost, the heaters switch off and the compressor remains inactive for the dripping time set in parameter **dt** (if a value other than zero). At the end of the dripping time, temperature control begins again as normal.

End of defrost

Defrost ends in the following conditions:

Condition	H4x value	Evaporator probe (dP1/dP2)
End of timeout period set using parameter **dE1**/**dE2**.	0	Not managed
Defrost end setpoint set using parameter **dS1**/**dS2** reached or due to timeout if the setpoint is not reached within the time period **dE1**/**dE2**.	1	Managed

Notes:

- To end defrost manually, switch the controller off and on again or use the ON/OFF function (Stand-by)
- If **dS1**/**dS2** intervenes before **dE1**/**dE2**, dripping (managed by parameters **dt** and **Fdt**) is activated in correspondence with **dS1**/**dS2**
- If **Fdt** < **dt**, **Fdt** = **dt** is set
- During the defrost the fans are off if **dFd** = OFF, otherwise they follow the other settings for the fan regulator

Regulation diagram

End of electric heater defrost due to timeout

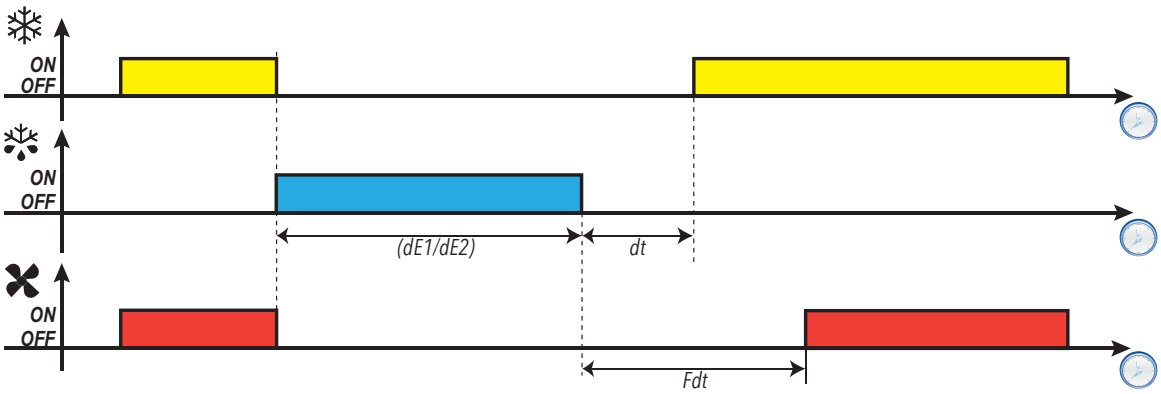

End of electric heater defrost due to temperature

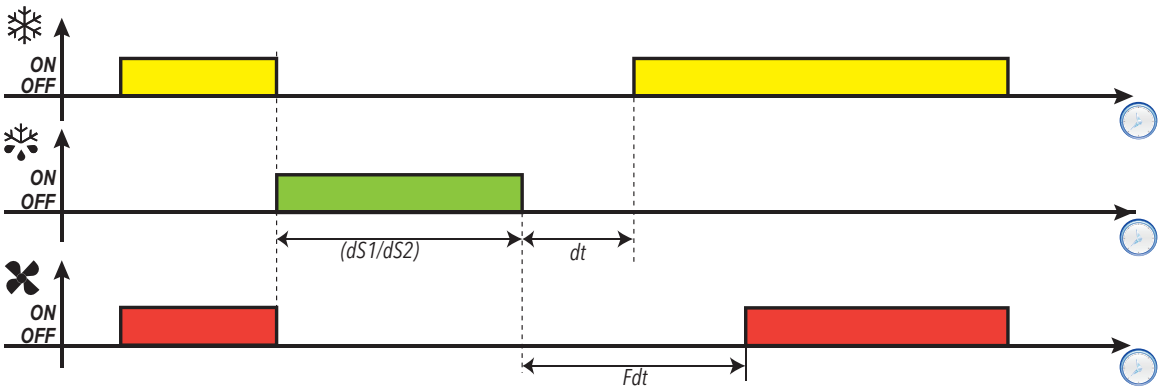

Parameters

Parameter	Description
dOn	Compressor relay activation delay time from call.
dOF	Delay time after compressor relay switch-off and the next switch-on.
dbi	Delay time between two compressor switch-ons.
dty	Type of defrost.
dP1	Sets the probe used by defrost 1.
dP2	Sets the probe used by defrost 2.
dE1	Defrost 1 timeout. Sets the maximum duration of defrost 1.
dE2	Defrost 2 timeout. Sets the maximum duration of defrost 2.
dS1	Evaporator 1 defrost end temperature.
dS2	Evaporator 2 defrost end temperature.
Fdt	Fan activation delay after a defrost.
dt	Dripping duration.
H4x	Configuration of analog input type set with dP1/dP2.

Inversion defrost

Cycle inversion defrost is used in "**LOW TEMPERATURE**" applications and is selected by setting **dty** = 1.

When cycle inversion defrost is activated:

- The compressor is always on
- the relay to which the solenoid valve is connected, configured as defrost regulator output, is activated

At the end of defrost the valve relay will be de-energized and the dripping phase set by parameter **dt** will be interrupted (if a value other than zero). The compressor relay reverts to being under the control of the compressor regulator.

End of defrost

Defrost ends in the following conditions:

Condition	H4x value	Evaporator probe (dP1/dP2)
End of timeout period set using parameter **dE1**/**dE2**	0	Not managed
Defrost end setpoint set using parameter **dS1**/**dS2** reached or due to timeout if the setpoint is not reached within the time period **dE1**/**dE2**.	1	Managed

Notes:

- To end defrost manually, switch the controller off and on again or use the ON/OFF function (Stand-by).
- The compressor safety timings (managed by parameters **dOn**, **dOF** and **dbi**) take priority over defrost
- If **dS1**/**dS2** intervenes before **dE1**/**dE2**, dripping (managed by parameters **dt** and **Fdt**) is activated in correspondence with **dS1**/**dS2**
- If **Fdt** < **dt**, **Fdt** = **dt** is set
- During the defrost the fans are off if **dFd** = OFF, otherwise they follow the other settings for the fan regulator

Regulation diagrams

End of inversion defrost due to timeout, with tCd > 0

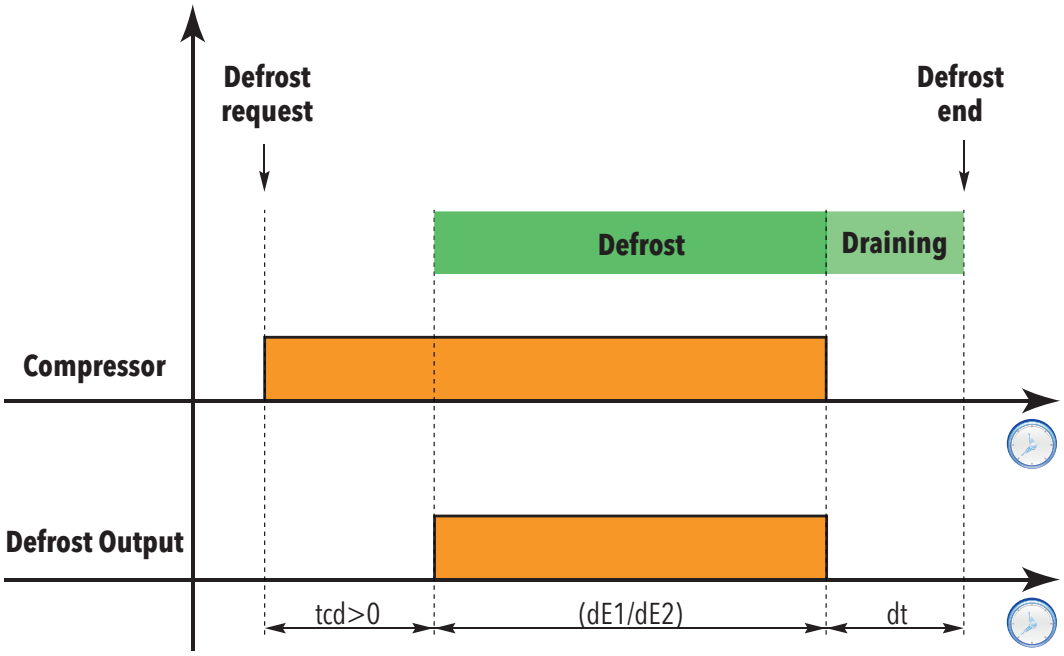

End of inversion defrost due to temperature, with tCd < 0

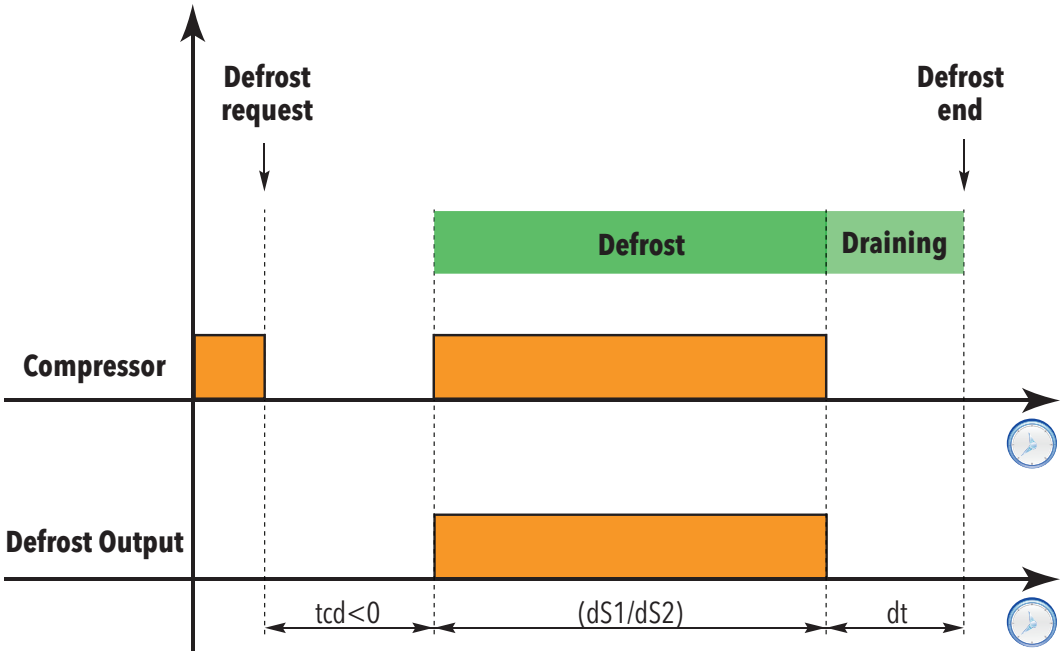

Legend:

- **Defrost Request** = Defrost start request
- **Defrost** = Defrost Period
- **Draining** = Dripping Period
- **Defrost end** = End of defrost
- **Compressor** = Compressor
- **Defrost Output** = Defrost output

Parameters

Parameter	Description
dOn	Compressor relay activation delay time from call.
dOF	Delay time after compressor relay switch-off and the next switch-on.
dbi	Delay time between two compressor switch-ons.
dty	Type of defrost.
dP1	Sets the probe used by defrost 1.
dP2	Sets the probe used by defrost 2.
dE1	Defrost 1 timeout. Sets the maximum duration of defrost 1.
dE2	Defrost 2 timeout. Sets the maximum duration of defrost 2.
dS1	Evaporator 1 defrost end temperature.
dS2	Evaporator 2 defrost end temperature.
tCd	Minimum period of time with the compressor ON or OFF before defrost is activated.
Fdt	Fan activation delay after a defrost.
dt	Dripping duration.
H4x	Configuration of analog input type set with dP1/dP2.

Hot gas defrost for plug-in systems

Hot gas defrost for **PLUG-IN** systems differs from cycle inversion defrosting as the refrigerant must be sufficiently heated before defrost begins; it is selected by setting **dty** = 2.

When hot gas defrost for **PLUG-IN** systems is activated:

- the EEV output is off (if present and enabled)
- The fans are off

The defrost cycle consists of the following phases (or a sub-group of them):

- **Deep cooling**: gas heating and cold storage in the counter, for a time period **tCd**>0
- **Pump down**: removal of cold gas from inside the evaporator, for a time period **tPd**>0
- **Defrost**: injection of hot gas, for a time period between **ndE** and **dE1**/**dE2**
- **Dripping**: completion phase for the removal of water from the evaporator (for a time period **dt**)

Regulation diagram

Scenario with tCd > 0, dty = 2 and PdC = 0:

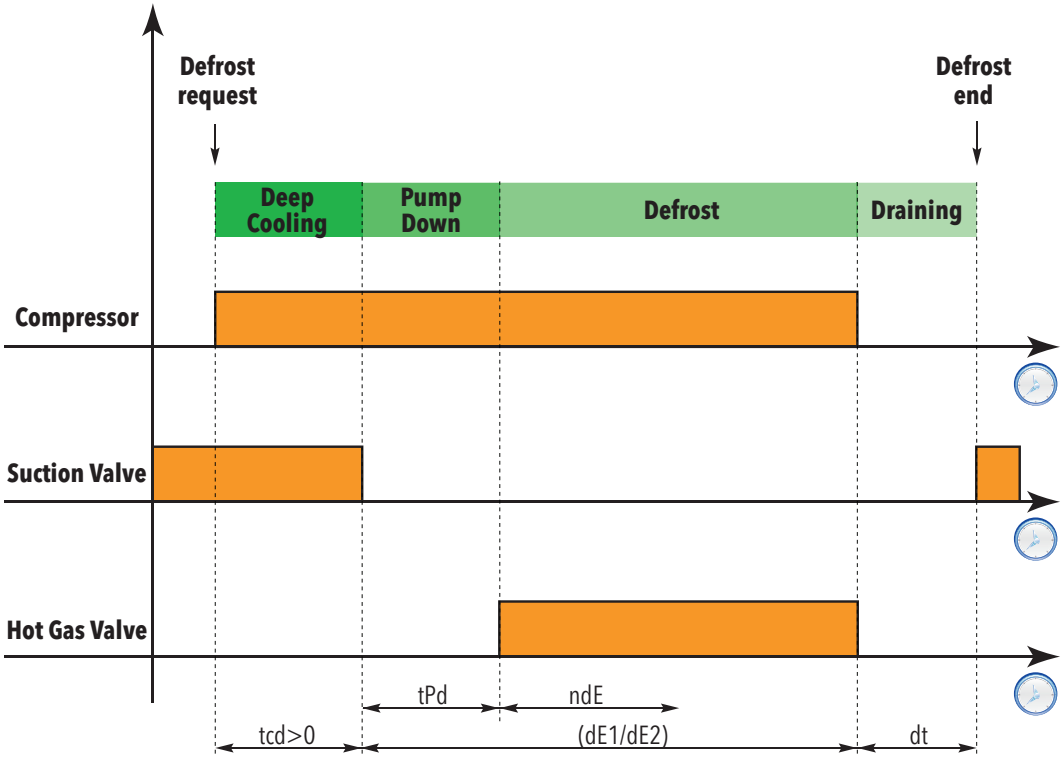

Legend:

- **Defrost Request** = Defrost start request
- **Deep Cooling** = Deep Cooling period
- **Pump Down** = Pump Down period
- **Defrost** = Defrost Period
- **Draining** = Dripping Period
- **Defrost end** = End of defrost
- **Compressor** = Compressor (**H2x** = 1 with **x** = 1...5)
- **Suction Valve** = Suction valve output (**H2x** = 13 with **x** = 1...5)
- **Hot Gas Valve** = Hot gas valve output (**H2x** = 2 with **x** = 1...5)

Hot gas defrost for systems with remote group

Hot gas defrost for systems with a **REMOTE** group differs from cycle inversion defrosting as the refrigerant must be sufficiently heated before defrost begins; it is selected by setting **dty** = 3.

When hot gas defrost for systems with a **REMOTE** group is activated:

- the EEV output is off (if present and enabled)
- The fans are off

The defrost cycle consists of the following phases (or a sub-group of them):

- **Pump down**: removal of cold gas from inside the evaporator, for a time period **tCd**<0
- **Defrost**: injection of hot gas, for a time period between **ndE** and **dE1**/**dE2**
- **Dripping**: completion phase for the removal of water from the evaporator (for a time period **dt**)
- **Pump down**: removal of cold gas from inside the evaporator, for a time period **PdC**
- **Regulation**: reactivation of the EEV (if necessary)

Regulation diagram

Scenario with tCd < 0, dty = 3 and PdC ≠ 0:

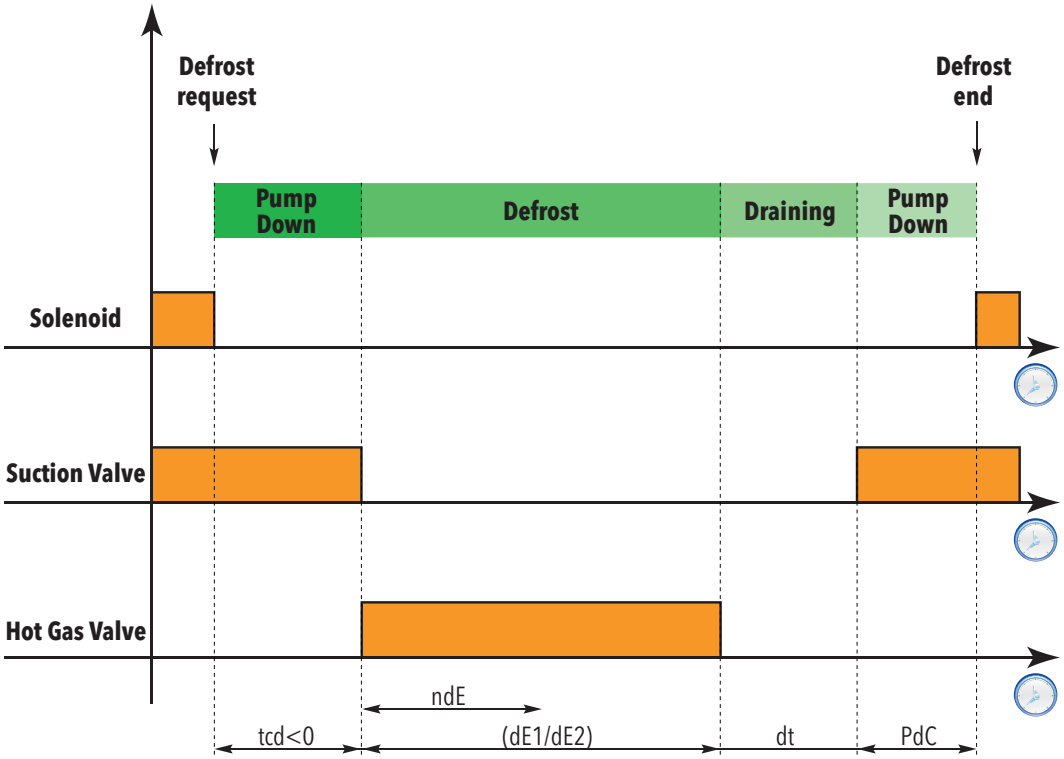

Legend:

- **Defrost Request** = Defrost start request
- **Pump down** = Pump down period
- **Defrost** = Defrost Period
- **Draining** = Dripping Period
- **Pump down** = Pump down period
- **Defrost end** = End of defrost
- **Solenoid** = Solenoid (**H2x** = 1 with **x** = 1...5)
- **Suction Valve** = Suction valve output (**H2x** = 13 with **x** = 1...5)
- **Hot Gas Valve** = Hot gas valve output (**H2x** = 2 with **x** = 1...5)

Modulating electric heater defrost: Smart Defrost

This algorithm can be used to optimize defrost by modulating the anti-sweater heaters and can be selected by setting **dty** = 4.

This algorithm makes it possible to reduce the defrost end setpoint, in relation to standard mode, as the controller, by suitably modulating the heaters, is capable of detecting when all the ice has melted and it is therefore possible to end defrost before the timeout **dE1**.

The configuration of this mode is similar to that used for traditional defrost. Set the same timeout; the defrost end setpoint can be reduced.

Notes:

- This algorithm applies to both single and dual evaporator scenarios
- The function is active if **dty**=4 and ends due to time (**dE1**) or temperature (**dS1**).

Regulation diagram

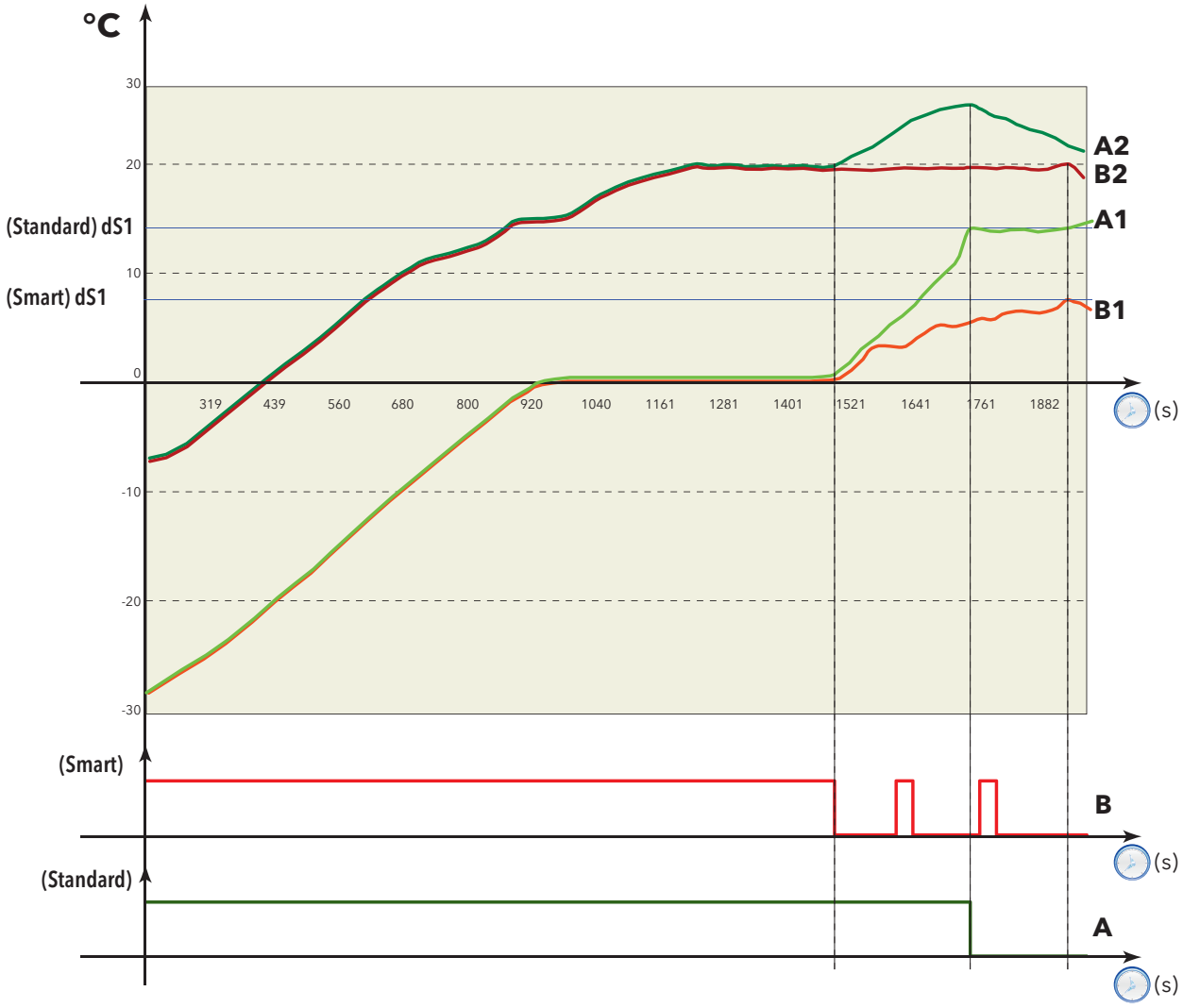

Legend	Curve description
A	'Standard' defrost relay activation
A1	'Standard' defrost evaporator temperature
A2	'Standard' defrost counter temperature
B	'Smart' defrost relay activation
B1	'Smart' defrost evaporator temperature
B2	'Smart' defrost counter temperature

Dual evaporator defrost

Introduction

Dual evaporator defrost is activated with (**dP2** ≠ diS).

In dual evaporator applications, defrost can be optimized by using a probe and an output for each individual evaporator, so as to optimize the heating phase for each individual evaporator, according to actual requirements.

Notes:

- This mode is activated if at least two outputs are configured as defrost (evaporator 1 and evaporator 2)
- Each evaporator has its own set of defrost end and timeout values.

Operation

Conditions for defrost (temperature under the threshold), with two sensors (one per evaporator), can be implemented in one of the following ways

dFt value	Condition
0	Evaporator 1 defrost probe (**dP1**) under the threshold **dS1**.
1	At least one evaporator has the conditions for defrosting, i.e.: • Evaporator 1 defrost probe (**dP1**) under the threshold **dS1** or • Evaporator 2 defrost probe (**dP2**) under the threshold **dS2**
2	Both evaporators have the conditions for defrosting, i.e.: • Evaporator 1 defrost probe (**dP1**) under the threshold **dS1** and • Evaporator 2 defrost probe (**dP2**) under the threshold **dS2**

End of defrost

Defrost end for each individual evaporator occurs when:

- time period **dE1**/**dE2** has elapsed (timeout)
- temperature **dS1**/**dS2** has been reached

Regulators

Contents

This section includes the following topics:

Regulation 125
Single Thermostat regulation (rE=0) 126
Dual Thermostat in series regulation (rE=1) 127
Dual Thermostat in parallel regulation (rE=2) 128
Two independent generic purpose regulators (rE=4) 129
Continuous Modulation (rE=5 or 6) 130
Compressor 131
Evaporator Fans 135
Modulated Fans 141
Condenser Fans 144
Preheating 145
Energy Saving 146
Deep Cooling Cycle (DCC) 147
Anti-sweater heaters (Frame heater) 149
Auxiliary Output (AUX) 152
Auxiliary Output (Light) 153
Door control / External alarm 154
Stand-by 156
Soft Start 157
Pump down (Pump out) 158
Compressor oil heater 159
Counter Cleaning Function 160

Regulation

Description

The device allows various regulation methods:

- Single thermostat (**rE**=0)
- Dual thermostat in series (**rE**=1)
- Dual thermostat in parallel (**rE**=2)
- Two independent generic purpose regulators* (**rE**=4)
- Continuous Modulation (**rE**=5 or 6)
- Reserved (**rE**=3)

(*) The second regulator is a generic auxiliary output, not subject to the timings described by parameters **Cit**, **CAt**, **dOn**, **dOF**, **dbi**.

This regulator is independent from the other regulators, except the stand-by function, in which the output is deactivated.

Note: when using single thermostat mode, you can also have an auxiliary regulator for applications that can be customized by the user (for example: light management, etc).

Single Thermostat regulation (rE=0)

The “Single thermostat” regulator (**rE** = 0) is always enabled and can work in heat or cool mode depending on the value of parameter **HC1**.

Regulation is activated by using parameter **rP1** to set the desired probe.

This regulation makes it possible to manage the regulation differential in absolute or relative mode:

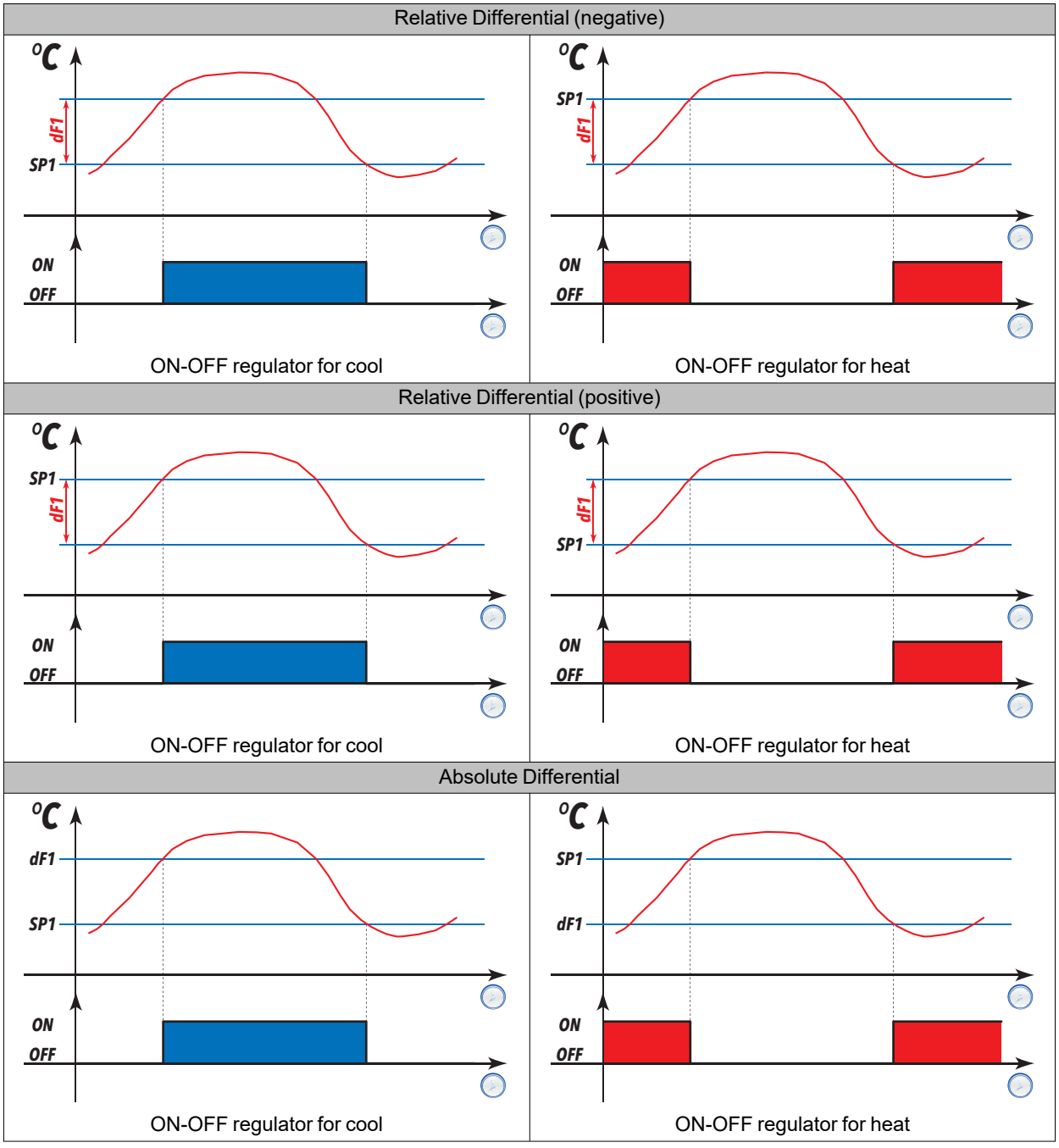

The regulator is managed using the following parameters:

- **rP1**: regulation probe 1 setting
- **SP1**: first regulator setpoint / power off setpoint setting (switch ON)
- **dF1**: first regulator differential / power on setpoint setting (switch OFF)
- **Stt**: differential mode setting (Absolute or Relative)
- **HC1**: first regulator heat/cool mode setting

Dual Thermostat in series regulation (rE=1)

This regulator only activates the production of cold/heat if both thermostats are active, and deactivates it when at least one of the two thermostats is satisfied (cabinet with 2 probes, one in delivery and one in pick up).

Regulation is activated by using parameters **rP1**/**rP2** to set the desired probes.

In the event of a probe error on one or both thermostats, regulation will use the probe error parameters.

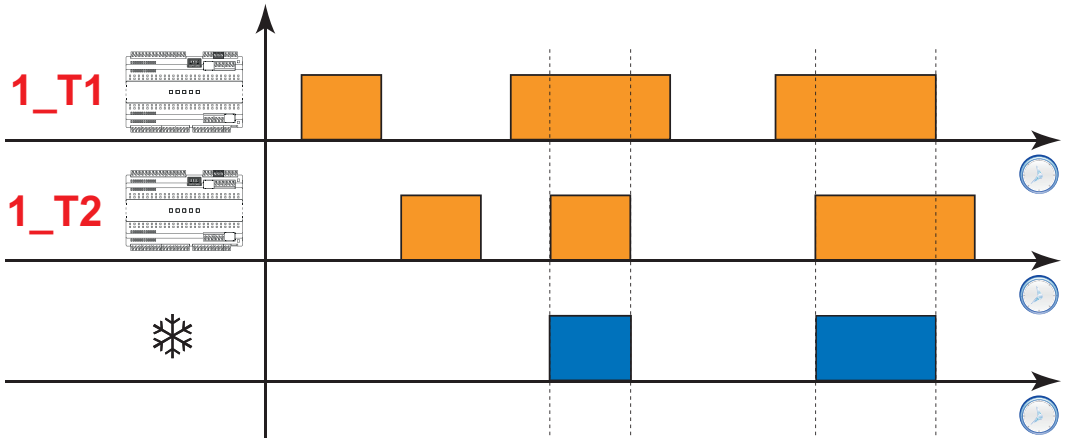

Legend: **1_T1** represents the progress of the probe set as thermostat 1 and **1_T2** represents the progress of the probe set as thermostat 2.

The 2 regulators are managed using the following parameters:

First regulator:

- **rP1**: regulation probe 1 setting
- **SP1**: first regulator setpoint setting
- **dF1**: first regulator differential setting
- **HC1**: first regulator heat/cool mode setting

Second regulator:

- **rP2**: regulation probe 2 setting
- **SP2**: second regulator setpoint setting
- **dF2**: second regulator differential setting
- **HC2**: second regulator heat/cool mode setting

Dual Thermostat in parallel regulation (rE=2)

This regulator only activates the production of cold/heat if both thermostats are active, and deactivates it when both of the two thermostats are satisfied (combined cabinet: island and upright).

Regulation is activated by using parameters **rP1**/**rP2** to set the desired probes.

In the event of a probe error on one or both thermostats, regulation will use the probe error parameters.

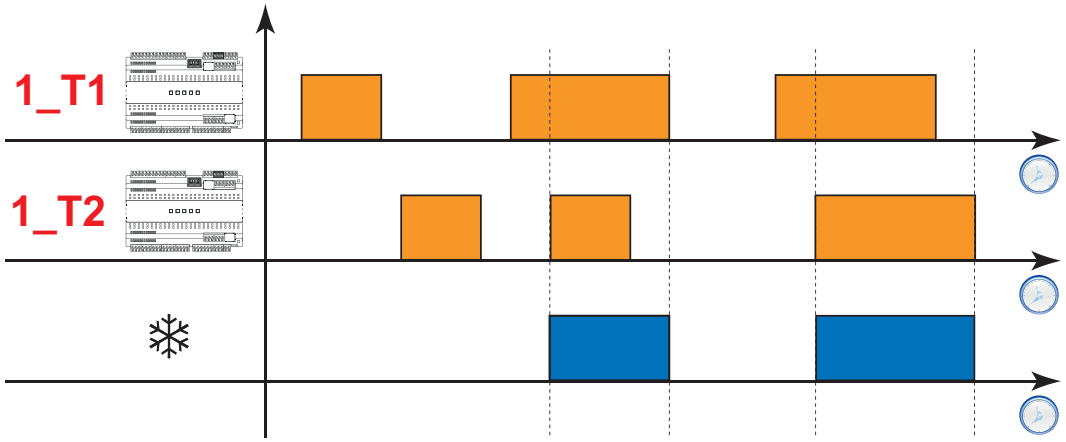

Legend: **1_T1** represents the progress of the probe set as thermostat 1 and **1_T2** represents the progress of the probe set as thermostat 2.

The 2 regulators are managed using the following parameters:

First regulator:

- **rP1**: regulation probe 1 setting
- **SP1**: first regulator setpoint setting
- **dF1**: first regulator differential setting
- **HC1**: first regulator heat/cool mode setting

Second regulator:

- **rP2**: regulation probe 2 setting
- **SP2**: second regulator setpoint setting
- **dF2**: second regulator differential setting
- **HC2**: second regulator heat/cool mode setting

Two independent generic purpose regulators (rE=4)

Regulation is activated by using **rP1**/**rP2** to set the desired probes.
It is possible to activate a second independent generic purpose regulator*.

(*) The second regulator is a generic auxiliary output, not subject to the timings described by parameters **Cit**, **CAt**, **dOn**, **dOF**, **dbi**.

This regulator is independent from the other regulators, except the stand-by function, in which the output is deactivated.

This regulator only activates the production of heat/cold if both thermostats are active.

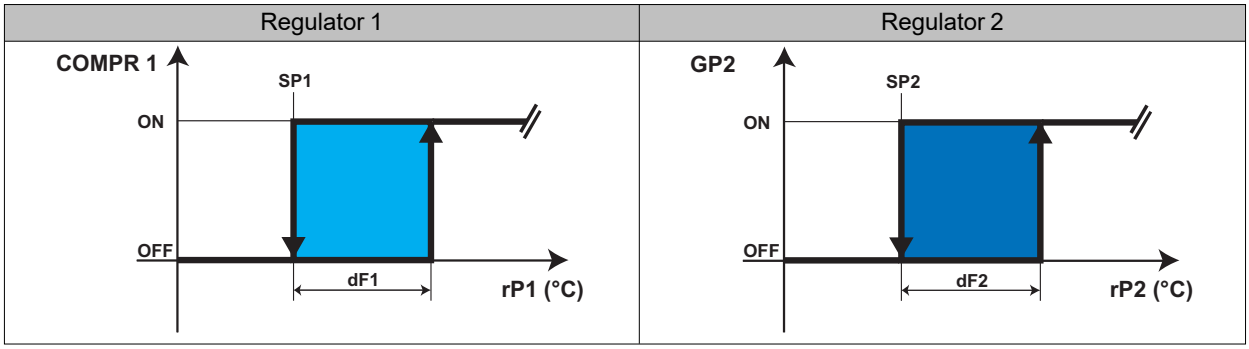

The first regulator implements output **COMPR 1**, which depends on the values and parameters indicated in the diagram, as well as the compressor safety timings.

The second regulator implements output **GP2**, which is a compressor or a generic auxiliary output, not subject to the timings described by parameters **Cit**, **CAt**, **dOn**, **dOF**, **dbi**.

The second regulator:

- can work in both Heat and Cool modes
- has its own setpoint (**SP2**) and its own differential (**dF2**)
- has no safety timing, except for the timing **OdO**
- in the event of a probe error, the output will be permanently off

This regulator is independent from the other regulators, except the stand-by function, in which the output is deactivated. It can be used, for example, to manage the light.

Note: in the latter case, set the setpoint **SP2** and differential **dF2** according to the transcoding tables associated with the compatible sensors. For assistance in choosing sensors, please contact Eliwell.

The 2 regulators are managed using the following parameters:

First regulator:

- **COMPR1**: (**Compressor**; H21...H27 = 1) output progress relating to the first regulator
- **rP1**: regulation probe 1 setting
- **SP1**: first regulator setpoint setting
- **dF1**: first regulator differential setting
- **HC1**: first regulator heat/cool mode setting

Second regulator:

- **GP2**: (**General purpose AUX regulator**; H21...H27 = 12) output progress relating to the second regulator
- **rP2**: regulation probe 2 setting
- **SP2**: second regulator setpoint setting
- **dF2**: second regulator differential setting
- **HC2**: second regulator heat/cool mode setting

Continuous Modulation (rE=5 or 6)

Continuous modulation with a single thermostat

Continuous modulation with a single thermostat can be activated by configuring parameter **rE**=5.

The algorithm modulates the EEV to maintain the regulation temperature within the band (**SP1-dF1**)...(**SP1+dF1**).

If superheat falls below the setpoint **OIt**, the regulator will reduce valve opening so as to bring the value back above **OLt** (this will be to the detriment of temperature regulation).

Continuous modulation with a dual thermostat series

Continuous modulation with a dual thermostat in series can be activated by configuring parameter **rE**=6.

The regulation temperature corresponds to the temperature nearest its setpoint: **SP1** (Thermostat 1) and **SP2** (Thermostat 2).

In case of Energy Saving mode, the value is calculated by the sum of parameters:

- (**SP1+OS1**) for Thermostat 1
- (**SP2+OS2**) for Thermostat 2

The algorithm modulates the EEV to maintain the difference between the temperature and the relevant setpoint within the band:

- (**SP1-dF1**)...(**SP1+dF1**) for Thermostat 1
- (**SP2-dF2**)...(**SP2+dF2**) for Thermostat 2

If superheat falls below the setpoint **OLt**, the regulator will reduce valve opening so as to bring the value back above **OLt** (this will be to the detriment of temperature regulation).

The superheat control is activated when the superheat is below the setpoint **OLt** or the regulation temperature is above **SP1 + dF1**/**SP2 + dF1**.

Continuous modulation is activated when the regulation probe is below the setpoint **SP1**/**SP2** and the superheat value is above **OLt**.

The superheat control uses the **U14** parameter and the continuous modulation uses the **U20** parameter.

Continuous modulation and oil management

Oil management is activated when using continuous modulation, because a small quantity of oil could be present inside the evaporator (this is due to the limited flow of refrigerant).

To overcome this problem, the PUMP IN/OUT can be activated; every **U55** seconds it closes the valve for a time period **U53** and then re-opens it at 100% for a time period **U54**.

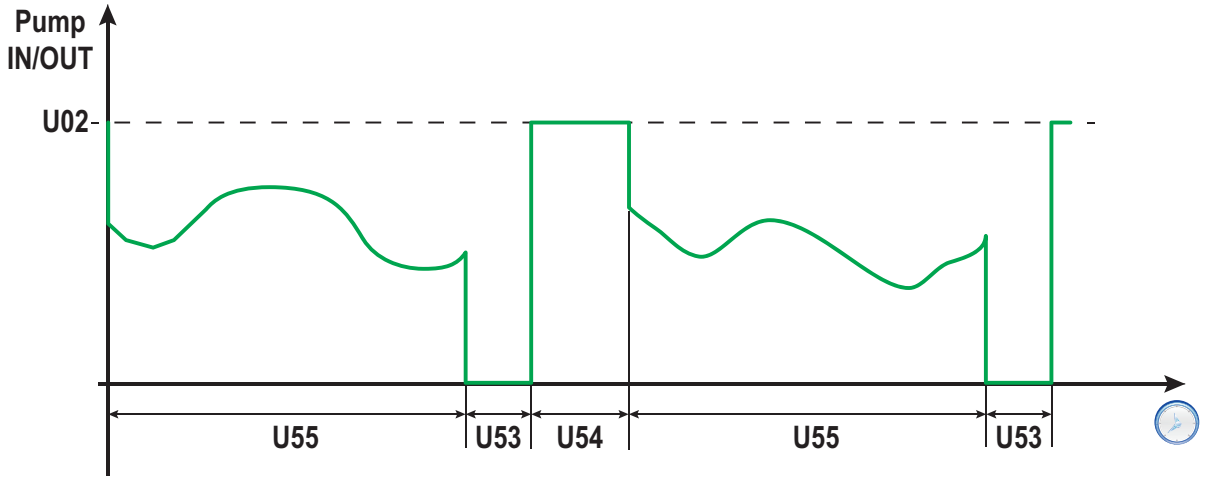

Regulation in the event of probe error

In the event of a probe error on the first regulator, and/or the second regulator if using dual thermostat mode, the output will be managed in accordance with parameters **Ont** and **OFt**.

Compressor

Description

If the cold room probe is in error, the relay for the output configured as compressor/general (**H2x**=1) regulates according to the timescales set by parameters **Ont** and **Oft**.

The first timescale to be activated is **Ont**. If **Ont** > 0 the protection programmed using parameters **dOn**, **dOF** and **dbi** must nevertheless be observed.

Note: Parameter **OdO** inhibits activation of any relay output (compressor/general, defrost, fans, etc.) for its duration, with the exception of the buzzer or the alarm relay.

Operating conditions

The compressor relay output is managed as follows:

Ont	OFt	Compressor output
0	0	off
0	>0	off
>0	0	active
>0	>0	Duty cycle, regardless of the probe values (cold room probe not working) and requests from other utilities

If **Ont** > 0 and **OFt** = 0: the compressor regulator will always be on.

If **Ont** > 0 and **OFt** > 0: the compressor runs in operating cycle mode regardless of the values assumed by the probes (cold room probe not working) and requests from other users (duty Cycle).

Note: if the cold room probe is working, duty cycle mode is not enabled and conventional regulation is activated. When the probe is reset (connected or replaced), normal regulation starts up again.

The diagram below shows duty Cycle operating mode if **Ont**>0 and **OFt**>0:

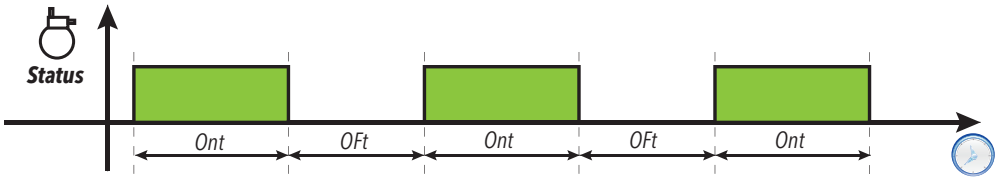

Compressor protections

To avoid damaging the compressor, the following protections can be set up:

- a delay **dOF** on reactivation of the compressor after the activation request ends. If a new activation request arises during the delay **dOF**, the compressor icon will flash on the display.
- a delay **dbi** between one compressor startup and the next. The delay **dbi** is calculated from the previous compressor startup. If a request arises during the delay **dbi**, the compressor icon will flash on the display.
- a delay **dOn** for compressor startup after the request. During the delay **dOn**, the compressor icon will flash on the display

Regulation diagrams

Compressor activation delay from request

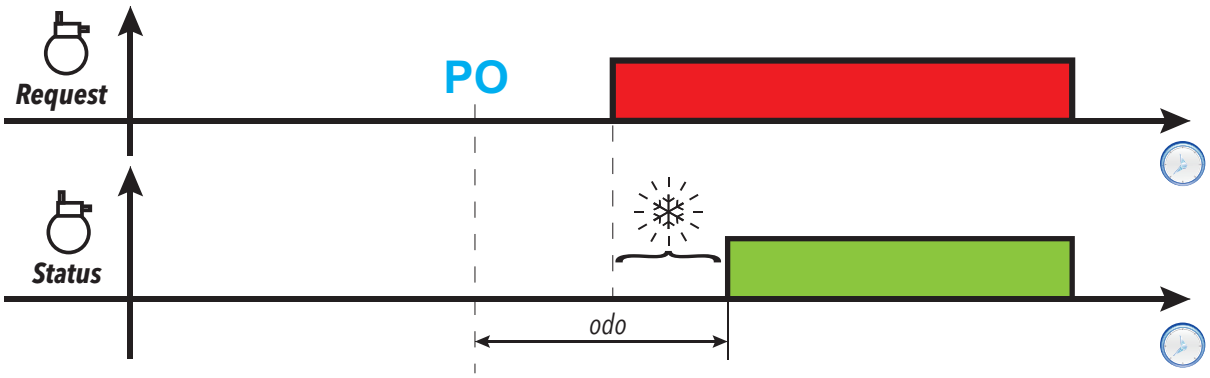

Compressor output activation delay from switch-off

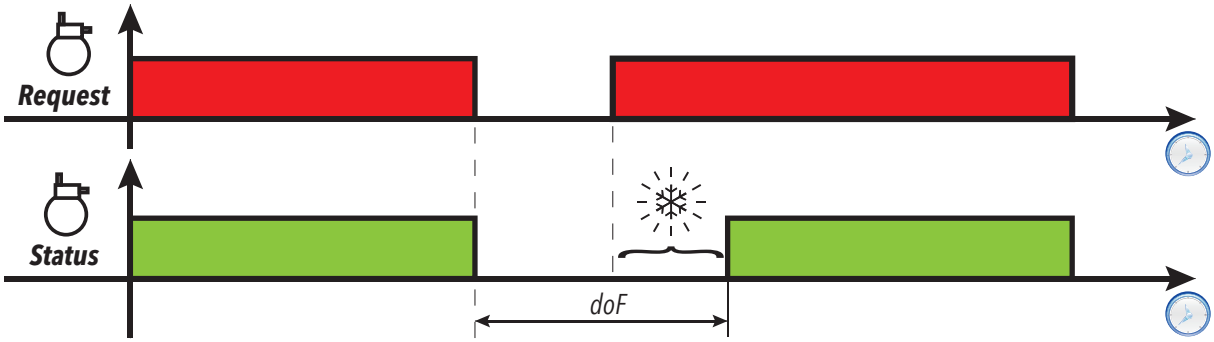

Delay between two consecutive compressor output activations

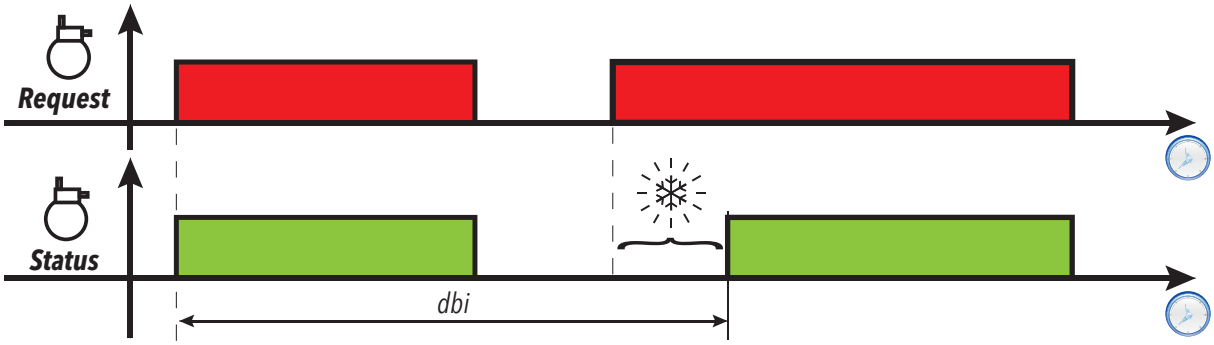

Compressor activation delay from request

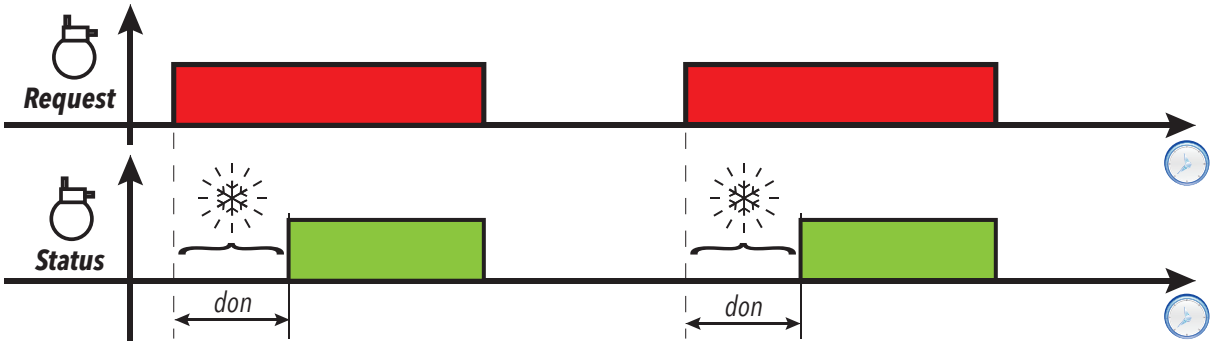

Legend: **PO** = Controller switch-on; ❄ = Compressor icon flashing; **Request** = Compressor activation request; **Status** = Compressor status (ON/OFF).

Parameters

Parameter	Description
Ont	Compressor output ON time if probe in error
OFt	Compressor output OFF time if probe in error
dOn	Compressor relay activation delay from call
dOF	Delay between compressor relay switch-off and the next switch-on
dbi	Delay between two subsequent compressor starts
OdO	Output activation delay time from switching on the device or after a power outage
COd	Time compressor remains off before a defrost

Energy Saving regulation

Energy Saving mode can be activated in one of the following ways:

- via digital input (if suitably configured)
- via key (if suitably configured)
- remotely (directly via the supervision system)
- via RTC (if suitably configured)
- via Link2.

During this mode, offsets **OS1** and **OS2** will be added to regulation setpoints **SP1** and **SP2**. If the second regulator is active, the offset will also be added to it.

Note: if you do not want the Offset to be added to the second regulator as well, set **OS2** = 0.

During this mode, the differential value on which to work will also be changed, **dF1** will be replaced by **dn1** and **dF2** by **dn2**. If the second regulator is active, the differential will also be added to it.

Note: if you do not want to change the value of the differential during Energy Saving mode, set **dn1** = **dF1** and **dn2** = **dF2**.

Dynamic Setpoint regulation

If the dynamic setpoint is active (inactive during Energy Saving), it is possible to increase or decrease the setpoint for value **Od1** (for setpoint 1) and **Od2** (for setpoint 2) when the door remains shut for a specific amount of time (defined by parameter **Cdt**).

As soon as the door remains open for a time defined by **Eso** within the space of one hour (not necessarily continuous, but rather cumulative) the normal setpoint value is restored.

Parameter **Eso** can be used to set the deactivation “threshold”:

- **ESo** = 0: high usage before deactivation
- **ESo** = 10: low usage before deactivation

The function is active if parameter **Cdt** ≠ 0 and if a DI is configured as door switch. If the auxiliary regulator is active, the offset will also be added to it.

Note: if you do not want the Offset to be added to the second regulator as well, set **Od2** = 0.

Below is a graph showing how the algorithm works. The settings are:

- **ESt** = 2
- **H11** = 8
- **ESF** = yES (enabled when “Energy Saving” mode is enabled).

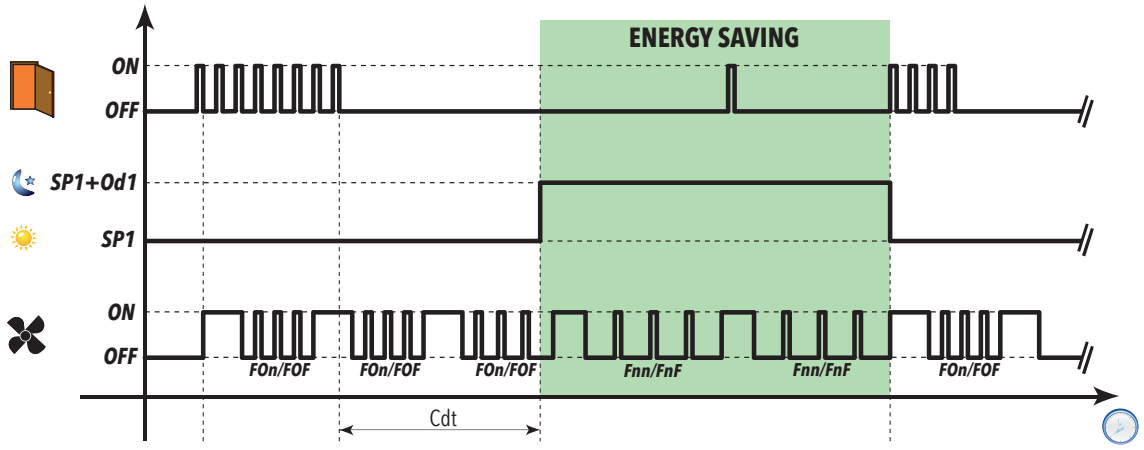

Remote Offset (only managed by Supervisor)

Serial commands can be used to increase/decrease the current value of the regulation setpoint for **OF1** (this will be added to setpoint **SP1** and any offset **OS1** or **Od1**).

Note: This increase/decrease only applies to the first setpoint (**SP1**).

This function is typically used for hot gas defrost systems, where it is necessary to have a certain number of counters supplying cooling, so as to ensure there is a sufficient amount of hot gas to perform defrosting as efficiently as possible.

Evaporator Fans

Operating conditions

Regulation is activated by using **FP1** to set the desired probe.

The evaporator fan regulator is activated if the following conditions occur:

- The time set using parameter **OdO** has elapsed (if **OdO** ≠ 0).
- The temperature read by the evaporator probe is lower than the value of parameter **FSt**.
- Parameter **dFd** is not excluded during the defrost (**dFd** = On).
- Dripping is not active (**dt**).
- Fan delay after defrost is not active (**Fdt**).

Regulator activation

The request for fan activation or deactivation can take place in the following ways:

- from the compressor regulator, to assist in cooling (temperature control mode)
- from the defrost regulator, to control and/or limit the circulation of warm air.

Fan operating modes

		Day		Night	
Probe	**FCO**	**Compressor ON**	**Compressor OFF**	**Compressor ON**	**Compressor OFF**
Present	0	Thermostat controlled	Off	Thermostat controlled	Off
	1	Thermostat controlled	Thermostat controlled	Thermostat controlled	Thermostat controlled
	2	Thermostat controlled	Thermostat controlled	Thermostat controlled	Night duty cycle
	3	Thermostat controlled	Day duty cycle	Thermostat controlled	Night duty cycle
	4	Thermostat controlled	Day duty cycle REV**	Thermostat controlled	Night duty cycle REV**
Absent	0	On	Off	On	Off
	1	On	On	On	On
	2	Day duty cycle	Day duty cycle*	Night duty cycle	Night duty cycle*
	3	On	Day duty cycle*	On	Night duty cycle*
	4	On	Day duty cycle REV**	On	Night duty cycle REV**
In error	0	Day duty cycle	Off	Night duty cycle	Off
	1	On	Off	On	Off
	2	Day duty cycle	Day duty cycle	Night duty cycle	Night duty cycle
	3	Day duty cycle	Day duty cycle	Night duty cycle	Night duty cycle
	4	Day duty cycle	Day duty cycle	Night duty cycle	Night duty cycle

- (*): See section “Fan operation without probe”
- (**): Reverse operation of normal Duty cycle.

The graphs below illustrate fan operation in accordance with the value of **FCO**.

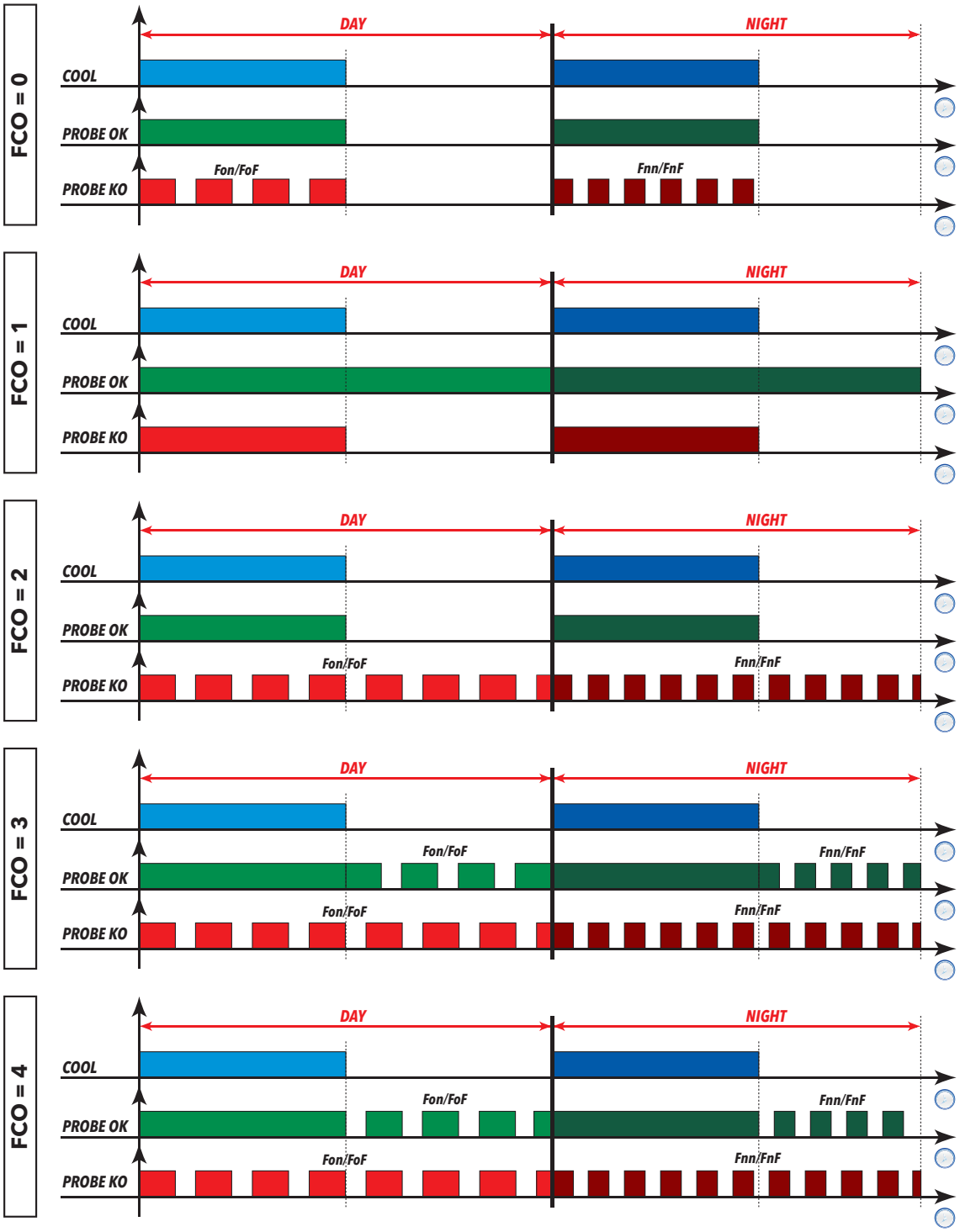

Legend: **DAY** = Day; **NIGHT** = Night; **COOL** = Cooling; **Probe OK** = Fan operation with probe present and working; **Probe KO** = Fan operation with probe present but in error.

Fan operation in temperature control mode

During cooling, fan temperature control is carried out based on values **FSt** (fan disabling temperature) and **FAd** (fan differential). Parameter **FPt** can be used to select whether the set temperature values are absolute or relative to the setpoint.

Note: around the fan start temperature -50°C (-58°F), the differential will always be specified by **FAd** but with the sign inverted.

Regulation diagrams based on whether the values are absolute or relative are shown below:

FPt = 0 (absolute values)	**FPt** = 1 (relative values)
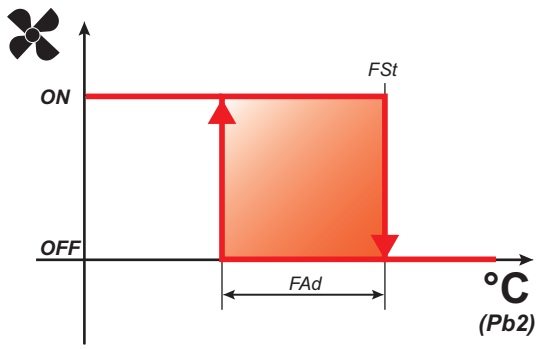	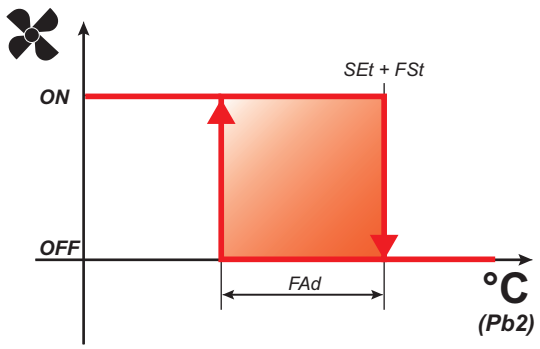

The regulation probe can be:

- One used for normal regulation and defrost **(FP1**≠0 and **FP2**=0)
- A specific probe for normal regulation and another during the defrost phase (**FP1**≠0 and **FP2**≠0).

The fans may be inhibited:

- during defrost
- if a digital input is configured as door switch.

When the evaporator fans are enabled during defrost (**dFd**=On) and the corresponding probe enters error status, the fans are kept running.

If the evaporator probe is not present, and **dFd**=On, the evaporator fans are active during defrost. Energy saving (night) mode is only active if enabled via parameter **ESF** when the controller is in Energy Saving mode.

Fan operation in duty cycle

The fans run in duty cycle mode when the compressor is off and this mode is specified by parameter **FCO**.

Activation of **Night** mode depends on parameter **ESF**:

- **ESF**=no: Night Mode disabled
- **ESF**=yES: Night Mode active when Energy Saving mode enabled

Depending on whether the controller is in day or night mode, fan operation is based on parameters **Fon** and **FoF** (day) or **Fnn** and **FnF** (night):

Fon / Fnn	FoF / FnF	Fans
0	0	Off
0	≠0	Off
≠0	0	On
≠0	≠0	Duty cycle

Regulation diagram for Day duty cycle with compressor off

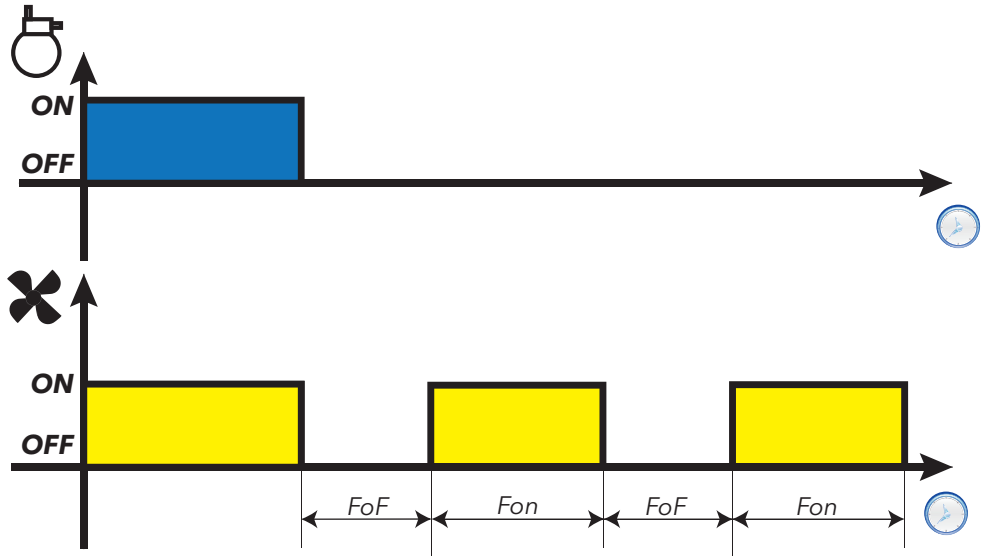

Regulation diagram for Night duty cycle with compressor off

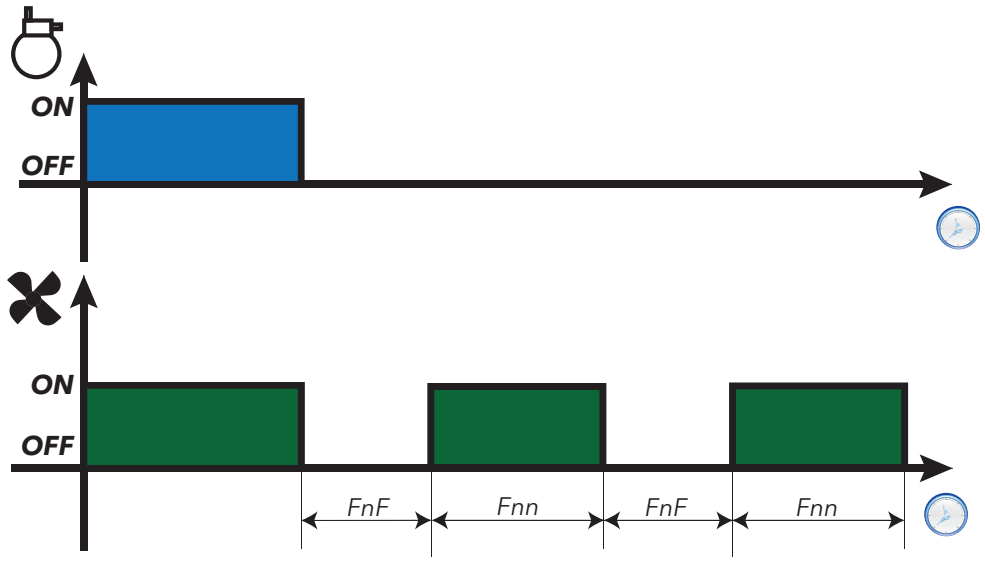

Fan operation in defrost mode

Operation depends on parameter **dFd**:

- **dFd**=OFF: Fans off during defrost
- **dFd**=On: Fans on during defrost (Temperature control or Duty cycle)

During cooling, fan temperature control is carried out based on values **FSt** (fan disabling temperature) and **FAd** (fan differential). Parameter **FPt** can be used to select whether the set temperature values are absolute or relative to the setpoint.

Note: in the case of “Electric heater” defrost, the compressor is OFF but the fans work as though the compressor was ON. To exclude the fans during a defrost, you must set **dFd**=OFF

When the evaporator fans are enabled during defrost (**dFd**=On) and regulate the evaporator probe in thermostat controlled mode, when the latter assumes error status it keeps the fans running constantly regardless of the values set by the Duty cycle.

Fan operation without probe

If the evaporator probe is absent, depending on the value of parameter **FCO** and the compressor status, the fans may be “On”, “Off”, in Duty cycle (Night or Day). Parameter **FCO** will determine the operating mode of the evaporator fans.

Below is an example of fan operation based on the value set by **FCO**.

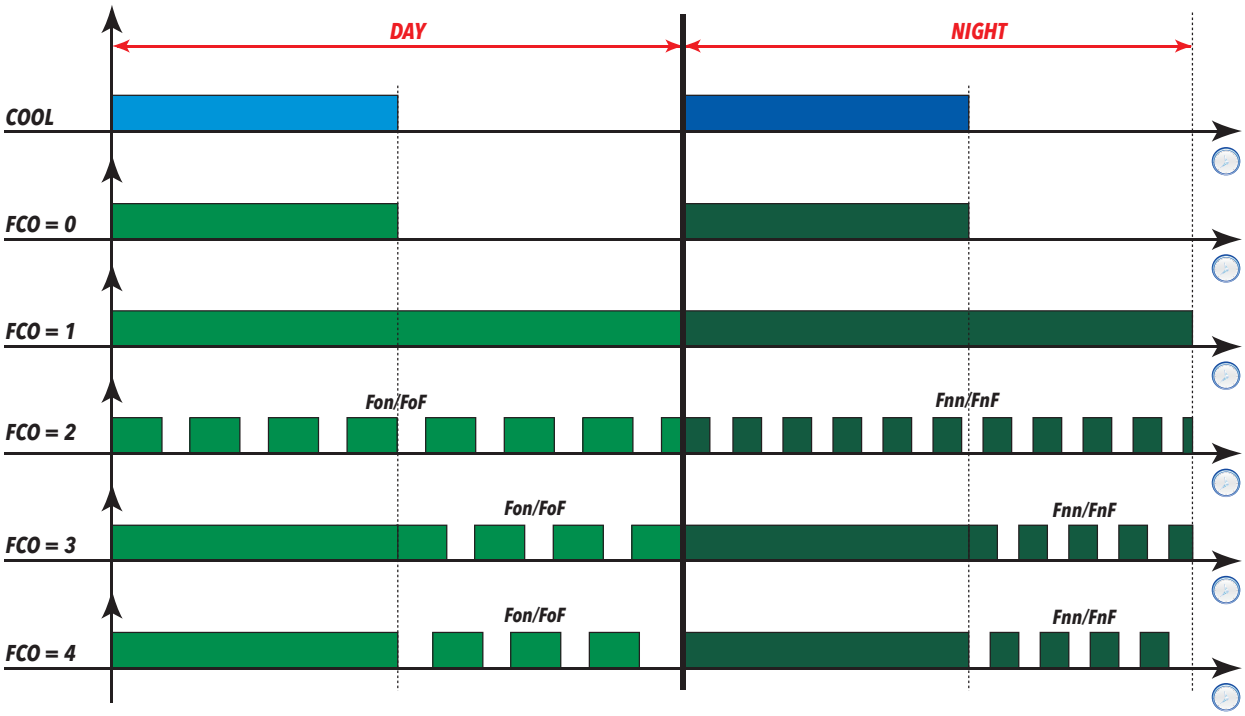

Fan operation in dripping mode

During dripping the fans remain stopped for the time set using parameter **dt**.

Note: if **Fdt** is greater than **dt** the fans remain off for the time set in **Fdt**.

Post-ventilation

Parameter **FdC** delays fan deactivation after the compressor has stopped. If **FdC** = 0 the function is excluded.

Parameters

Parameter	Description
OdO	Output activation delay time from switching on the device or after a power outage
FPt	Sets whether parameter **FSt** is expressed as an absolute value or as a value relative to the setpoint
FSt	Evaporator fan disabling temperature
Fdt	Evaporator fan activation delay time after a defrosting cycle
dFd	Evaporator fan exclusion during a defrost cycle
FCO	Evaporator fan operating mode
FdC	Evaporator fan shutoff delay after compressor deactivation
FAd	Evaporator fan trigger differential
dt	Dripping time
Fon	Evaporator fan ON time in day duty cycle mode
FoF	Evaporator fan OFF time in day duty cycle mode
Fnn	Evaporator fan ON time in night duty cycle mode
FnF	Evaporator fan OFF time in night duty cycle mode
ESF	Night mode activation

Modulated Fans

Description

This analog regulator is used to manage the modulated fans applied to the evaporator or condenser and provides an implementation percentage to be applied to the analog output (on the basis of parameter **H51**).

Regulation is activated by using **FE1** to set the desired probe (temperature probe or pressure transducer)

The regulation setpoint can be absolute or relative:

- Absolute if **FEt** = AbS and the setpoint will be the value of: FES
- Relative if **FEt** = rEL and the setpoint will be the value of: FES + Setpoint 1 (Regulator 1)

Operation examples

The analog output (indicated in the diagrams with **AO**), is calculated as (to keep things simple, we have illustrated the mode associated with **FEt**=AbS.
Se **FEt**=rEL, replace the value **FES** with (**FES** + Setpoint 1):

Day mode:

<table>
<tr><td>Cooling mode active and FE3>FE2</td><td>Cooling mode active and FE3<FE2</td></tr>
<tr><td>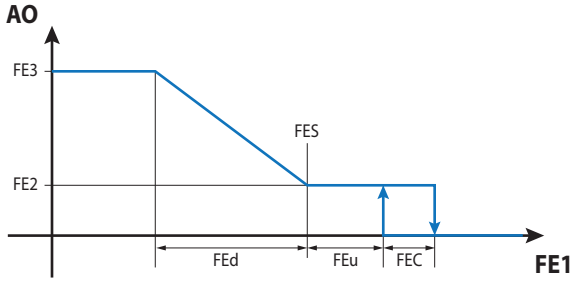
</td><td>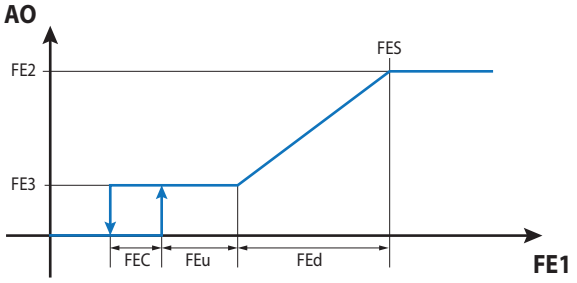
</td></tr>
<tr><td>Cooling mode not active and FE4>FE2</td><td>Cooling mode not active and FE4<FE2</td></tr>
<tr><td>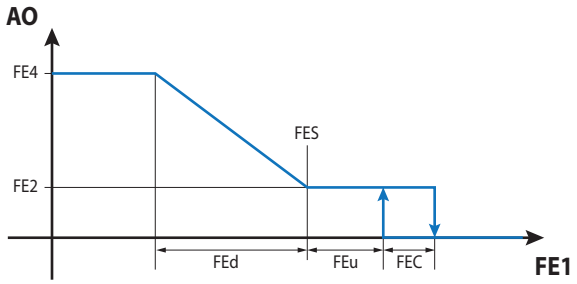
</td><td>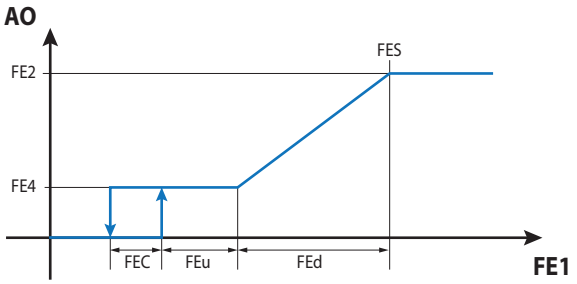
</td></tr>
<tr><td colspan="2">Cooling mode not active and FE4= 0%:
• The analog output will be fixed at 0%, regardless of the value of probe FE1.</td></tr>
</table>

Night mode:

Cooling mode active and **FE6>FE5**	Cooling mode active and **FE6<FE5**
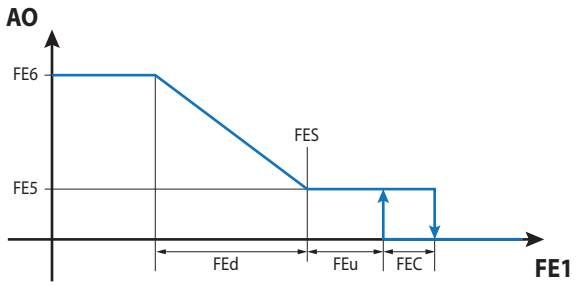	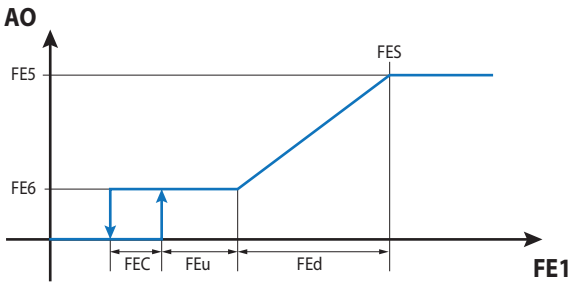
Cooling mode not active and FE7>FE5	**Cooling mode not active and FE7<FE5**
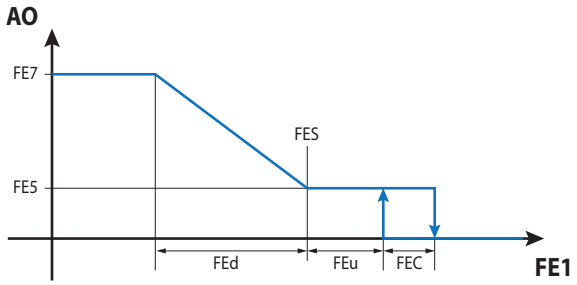	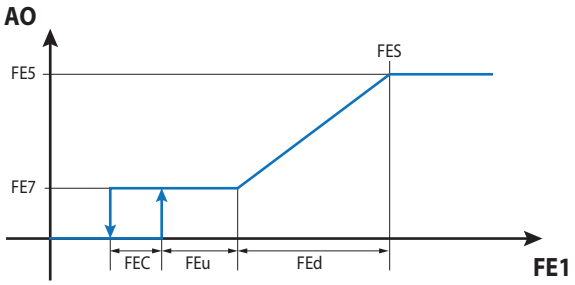

Cooling mode not active and **FE7**= 0%:

- The analog output will be fixed at 0%, regardless of the value of probe **FE1**.

Regulation with probe error

In the event of a probe error, the analog output will assume the following values:

Condition	Day		Night (Energy Saving)	
	Cooling ON	Cooling OFF	Cooling ON	Cooling OFF
FE4 > 0%	FE9	FE9	---	---
FE4 = 0%	FE9	0%	---	---
FE7 > 0%	---	---	FE9	FE9
FE7 = 0%	---	---	FE9	0%

During the defrost phase the output will be set to the value set by parameter **FE8**.

During dripping (with a duration **dt**) the output will be set to 0%.

If the analog output mode at 0% is selected with cooling off (**FE4**=0% and/or **FE7**=0%), the analog output can be kept active during post-ventilation **FEr**, as long as the analog output is > 0% when cooling is off, otherwise they will maintain 0%. During the time period **FEr** the cut-off is disabled.

Pick-up mode can be activated:

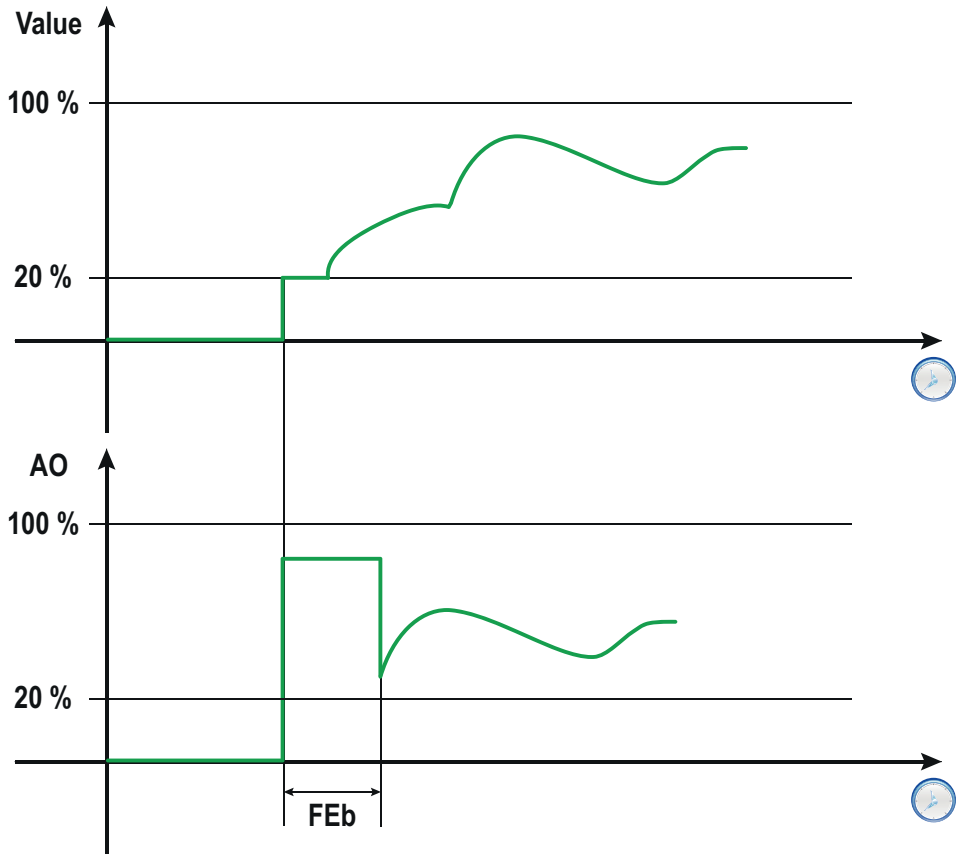

Prolonged use of the fans can reduce their performance and/or increase heating. Pick-up mode can be activated regularly for a time period **FEP**.

During “Counter cleaning“ mode, the modulated fans are forced to percentage **FE3**

Parameters

Parameter	Description
FE1	Sets the probe for the modulated fans.
FEt	**FES** parameter mode.
FES	Modulated fan disabling temperature.
FEd	Modulated fan differential
FEu	Cut-OFF (**0** = disabled)
FEC	Cut-OFF differential
FEr	Fan switch-off delay from compressor stop
FE2	Minimum Day percentage
FE3	Maximum Day percentage with compressor on
FE4	Maximum Day percentage with compressor off
FE5	Minimum Night percentage
FE6	Maximum Night percentage with compressor on
FE7	Maximum Night percentage with compressor off
FE8	Percentage during defrost
FE9	Percentage in the event of probe error
FEA	Fan pick-up percentage (0 = mode disabled)
FEb	Fan pick-up time
FEP	Fan forcing period at pick-up speed (0 = mode disabled)

Condenser Fans

Operating conditions

The condenser fan regulator and pre-ventilation are enabled if - and only if - a digital output is configured as a condenser fan output (**H2x** = ±11).

The condenser fans are active if at least one compressor is active.

Note: if the compressor is on in defrost (**dty**=1 and **dty**=2) and parameters **CFP**≠0 (Pre-ventilation time) and **CFd**=OFF (Condenser fan mode), in line with the end of defrost, the fans come on and the compressors switch off for the duration of the preheat phase (**CFP**).

Note: if the compressor is off in defrost (e.g. **dty**=0) and parameters **CFd**=On, regulation has priority during defrost and, even if **CFd**=On (fans on), the fans are switched off as come required by the regulator.

Parameters

Parameter	Description
dty	Defrost type. **0** = electric heater defrost **1** = cycle inversion defrost **2** = hot gas defrost for plug-in applications **3** = hot gas defrost for applications with remote group **4** = smart defrost.
CFP	Pre-ventilation time.
CFd	Condenser fan mode during defrosting.

Preheating

Description

The Preheat function can be a digital input with **H1x** = ±9 or **i0x** = ±9.

While the preheat output is active:

- the compressor output and evaporator fans are off
- the compressor icon (❄) will flash.

If the function is activated during defrost, Preheat can continue as normal, except in the defrost modes which need the compressor to be on, i.e.:

- Cycle inversion defrost (**dty**= 1)
- Hot gas defrost for plug-in applications (with built-in compressor) (**dty**= 2).

Energy Saving

Description

Energy Saving mode (sometimes also called night operation) can be used to activate a series of functions that help to reduce consumption during closure periods.

Operating conditions

The Energy Saving function can be activated in one of the following ways:

- press and hold a key with **H3x** = 4
- activating a digital input with **H1x** = ±4 or **i0x** = ±4
- via RTC by setting an event
- using a Supervisor, via Modbus command (serial)
- via Link2 network

Light and shutter output (AUX) management can take place in the following way:

- press and hold a key with **H3x** = 5
- activating a digital input with **H1x** = ±5 or **i0x** = ±5
- via RTC by setting an event
- using a Supervisor, via Modbus command (serial)
- via Link2 network

For the “evaporator fans” and the “anti-sweater heaters”, refer to the relevant sections.

On activation of the Energy Saving function there will be:

- a change in the weighted average of the virtual regulation / switching probe
- an increase in the setpoint (reduced setpoint)
- a change in the regulation differential
- a modulation of the evaporator fans when the setpoint has been reached
- a reduction in the power supplied by the anti-sweater heaters

Virtual probe / changing the probe

The device, in addition to regulating the values detected by the individual probes, can also regulate according to a weighted average of the value read by two probes (regulation probe and virtual probe):

- Virtual probe in Day mode:

$$Virtualprobe = [(probe1) * H72 + (probe2) * (100 - H72)]/100$$

- Virtual probe in Energy Saving mode (Night):

$$Virtualprobe = [(probe1) * H72 + (probe2) * (100 - H72)]/100$$

In the formula, probe 1 is selected via parameter **H70**, and probe 2 via parameter **H71**. Changing the regulation probe, between Day and Night - Energy Saving - mode, can be carried out by setting **H72**=100 and **H73**= 0:

- Virtual probe in Day mode: **Probe 1**
- Virtual probe in Energy Saving mode (Night): **Probe 2**.

Parameters

Parameter	Description
H70	Sets 1st probe to use as a virtual probe.
H71	Sets 2nd probe to use as a virtual probe.
H72	Sets the calculation % used by the virtual probe in day mode.
H73	Sets the calculation % used by the virtual probe in night mode.

Deep Cooling Cycle (DCC)

Description

During the deep cooling cycle, the compressor runs with a setpoint equal to **dCS** and differential equal to **dF1** for a maximum time period **tdC**.

Activation

A deep cooling cycle can be activated in one of the following ways:

- press and hold a key with **H3x** = 7
- activating a digital input with **H1x** = ±13 or **i0x** = ±13
- using a Supervisor, via Modbus command (serial)
- via Link2 network

In the event of a probe error and/or lack of power, the DCC ends and the device resumes standard operation.

Note: If parameters **dCS**, **tdC** and **dCC** are changed, DCC operation is recalculated with the new values set.

Operating conditions

When a deep cooling cycle is activated, defrosts are disabled.
At the end of the deep cooling cycle, after a delay of **dCC**, a defrost is forced and the count for interval **dit** begins again.

Exiting DCC takes place on the basis of time if parameter **tdC**≠0, or on reaching setpoint **dCS**. If **dCC**=0 the defrost takes place at the end of the DCC.

The deep cooling cycle ends automatically and standard regulation is resumed if:

- There is a probe error (the display shows **E2**).
- A blackout occurs and the controller switches off and on again.

If parameters **dCS**, **tdC** and **dCC** are changed during the deep cooling cycle, cycle operation should be recalculated for the new set values.

Regulation diagram

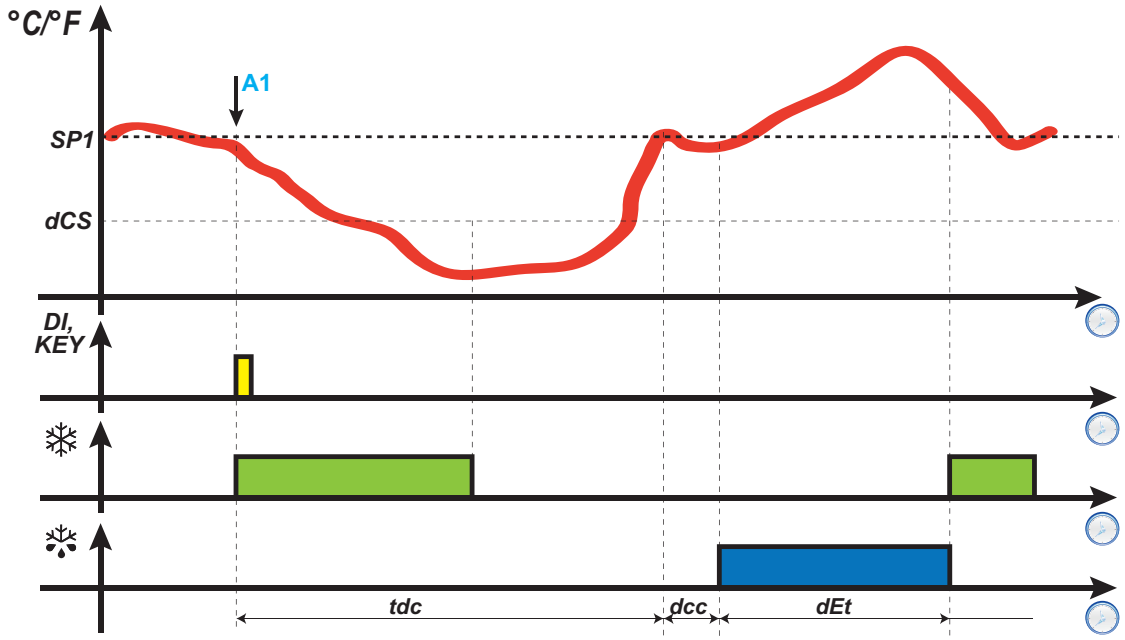

Legend: **A1** = DCC activation time; **DI** = Digital Input: **KEY** = Key.

Alarm operation during the deep cooling cycle

During the deep cooling cycle, the temperature alarms are disabled. Normal management is re-established at the end of the cycle, when the temperature read by **rP1** reaches the regulation setpoint value **SP1** again.

Parameters

Parameter	Description
SP1	Regulation setpoint for thermostat 1
SP2	Regulation setpoint for thermostat 2
dit	Interval between two consecutive defrosts
dCS	Deep cooling cycle setpoint
dF1	Setpoint differential for thermostat 1
dF2	Setpoint differential for thermostat 2
tdC	Deep cooling cycle duration
dCC	Defrost activation delay after a "Deep Cooling Cycle"
H11...H18	Digital input 1...8 /polarity configuration.
i01...i02	Digital input 9 and 10 /polarity configuration (on KDX).
H31...H37	Key configuration.

Anti-sweater heaters (Frame heater)

Description

This regulator can activate the anti-sweater heaters for a display unit or a chiller cabinet.

Regulation can be:

- with fixed Duty cycle (only if **FH**=dc)
- on glass sensor
- on glass sensor with remote Dew Point.

The device is used to control anti-sweater heaters by means of:

- external SSR relay with Open Collector output
- external module with analog input (0...10 V, 4...20 mA).

Connection examples

Example 1: Anti-sweater heaters with external SSR relay

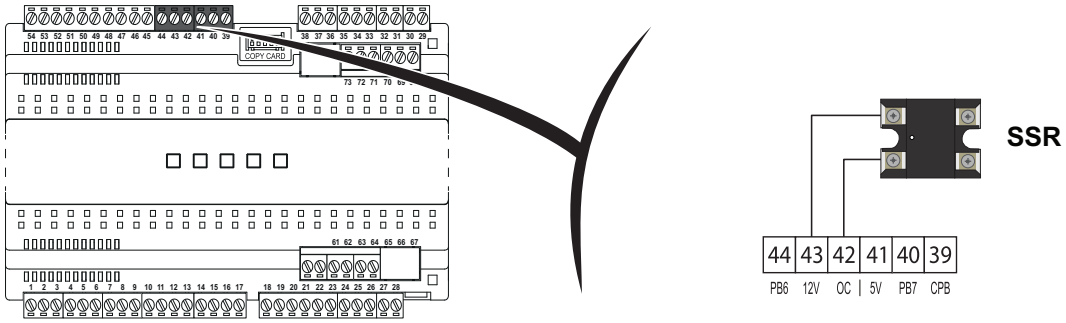

Example 2: Anti-sweater heaters with CFS-xx/I on output 4...20 mA

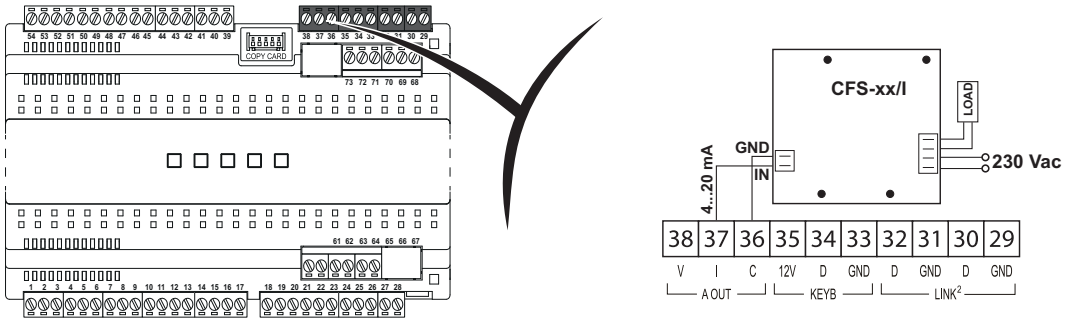

Note: The CFS-xx/V modules regulate the voltage of a load and have an input V = 0...10 V.

Example 3: Anti-sweater heaters with CFS-xx/V on output 0...10 V

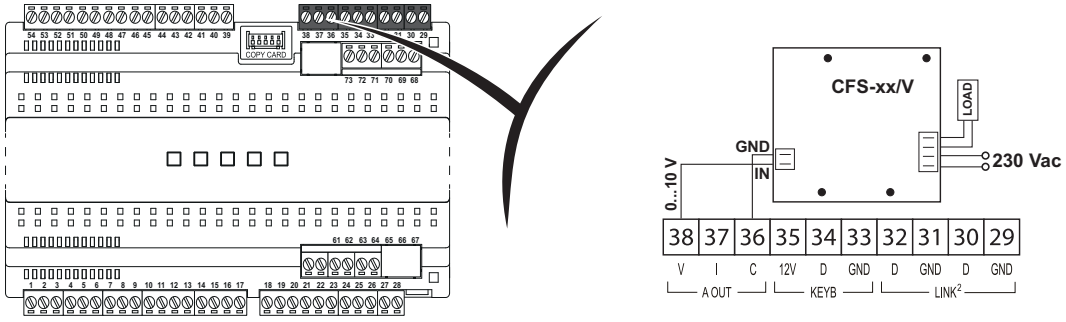

Note: The CFS-xx/I modules regulate the voltage of a load and have an input I = 4...20 mA.

Fixed duty cycle regulation

Fixed duty cycle regulation is activated by setting parameter **FH**=dc and forces a fixed implementation percentage as follows:

- Parameter value **FH4** for Day mode
- Parameter value **FH5** for Energy Saving - Night mode

- Parameter value **FH6** during defrost (Day / Night)

Open Collector output: parameter **FHt** defines the modulation period.

Analog output (4…20 mA / 0…10 V): fixed regulation percentage.

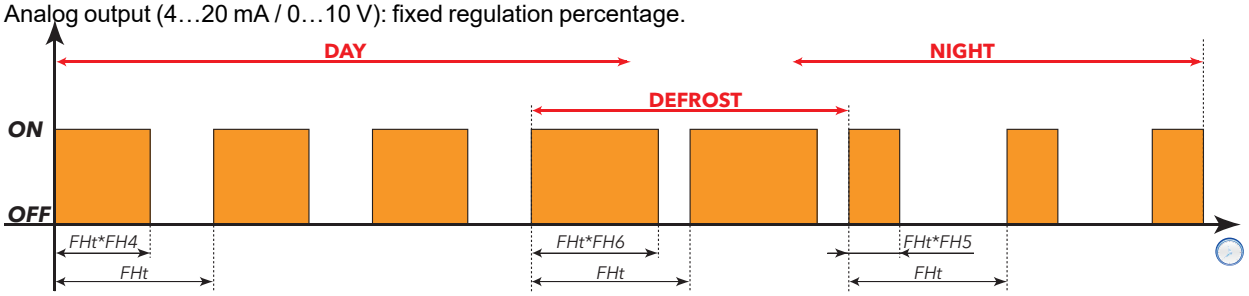

Legend: **Day** = Day; **Night** = Night; **Defrost** = Defrost.

Regulation on glass sensor

Regulation on glass sensor is activated by using **FH** to set the desired probe (diS=disabled; dc=Duty Cycle; Pb1...Pb5=probe Pb1...Pb5; Pbi=virtual probe; Pfi=filtered virtual probe). The output value depends on probe value. Refer to following charts:

day cycle	night cycle
FH4 > FH3	FH5 > FH3
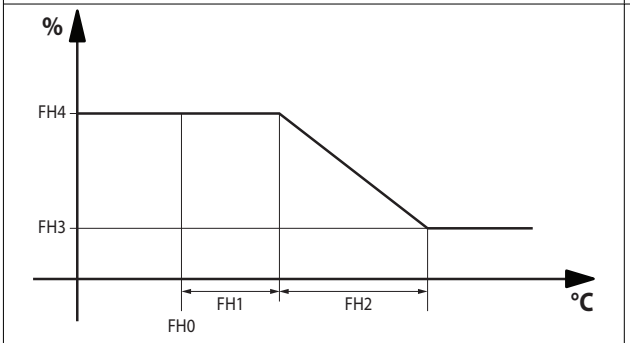	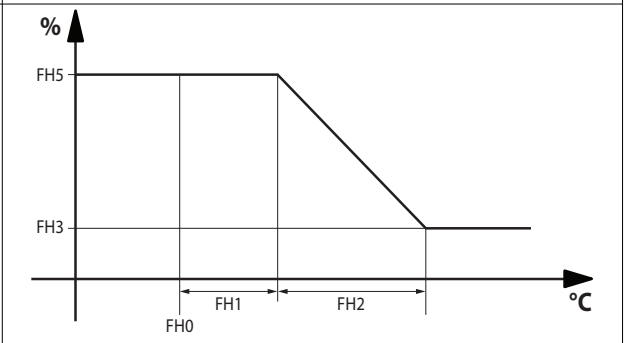
FH4 < FH3	FH5 < FH3
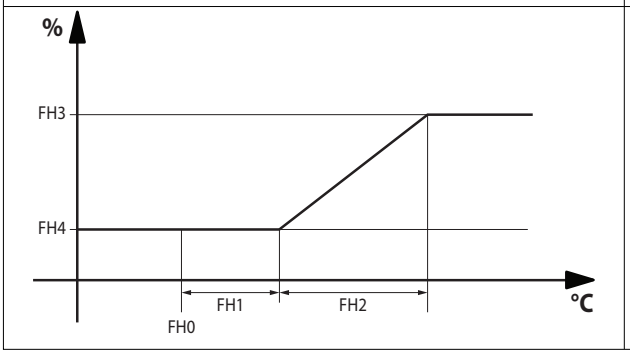	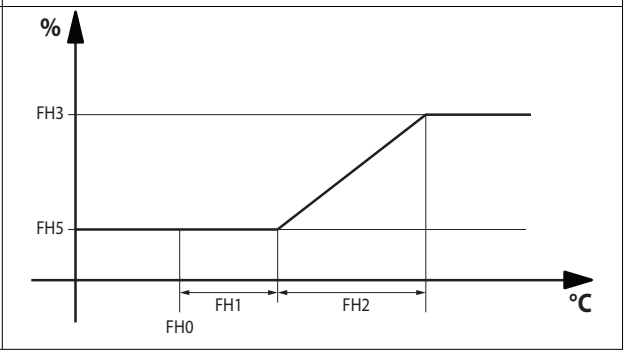

During the defrost phase the output will be set to the fixed value indicated by parameter **FH6**.

If a probe error is detected, the output is forced to:

- **FH4** during day cycle
- **FH5** during night cycle

The regulator can modulate the analog output (4…20 mA / 0…10 V), or it can modulate the Open Collector output (in this case the period is set by parameter **FHt**).

Note: The analog output (4…20 mA / 0…10 V) does not use parameter **FHt**.

Note: The meter controlling the timings of parameter **FHt** (on the basis of **FH4**, **FH5** and **FH6**) is not restored as soon as the status changes (Day, Night, Defrost), but waits for the current countdown to be completed.

Regulation on glass sensor with dew point

Regulation is largely the same as for the previous section; the only difference is in the setpoint value **FH0** which is changed remotely (remote dew point) and managed by the Supervisor by means of serial commands.

When it is switched on, the regulator loads the setpoint value indicated by parameter **FH0**. This regulation setpoint value can be changed and saved remotely.

Note: remote setpoint updating should be submitted within 60 minutes, otherwise the regulator will restore the value of parameter **FH0**.

Parameters

Parameter	Description
FH	Probe used by the anti-sweater heaters.
FHt	Anti-sweater heater operating period duration (FH), only used if the OC (Open Collector) output is used with SSR relay.
FH0	Setpoint corresponding to the anti-sweater heaters.
FH1	Offset corresponding to the anti-sweater heaters.
FH2	Band corresponding to the anti-sweater heaters.
FH3	Minimum percentage for anti-sweater heaters.
FH4	Maximum percentage for the day Duty Cycle.
FH5	Maximum percentage for the night Duty Cycle.
FH6	Anti-sweater heaters percentage during defrost.

Auxiliary Output (AUX)

Description

By setting a relay as an auxiliary output **AUX** with parameter **H2x**= 5 and pressing the key associated with **H3x** = 5, the relay activates if it was previously off and vice-versa. The status of the relay is stored in non-volatile memory, which means when the power is restored after a black-out the device resumes operation with the status it was in before the black-out occurred.

By setting a digital input with **H1x** = ±5 or **i0x** = ±5, its activation will ensure that the relay mirrors the status of the digital input. In this case the relay status is not memorized.

Note: When the device is off, only the digital input and the associated key can change the status of the output.

Note: Always use the same activation mode for the relay set as AUX. For example, if the relay is activated via Digital Input and deactivated via key, when the Digital Input status changes, the relay will not change status as it has already been activated via key.

Activation

The auxiliary output (AUX) can be activated in one of the following ways:

- press and hold a key with **H3x** = 5
- activating a digital input with **H1x** = ±5 or **i0x** = ±5
- via RTC by setting an event
- using a Supervisor, via Modbus command (serial)
- via Link2 network

Note: During stand-by the regulator operates in accordance with parameter **H08**, while at start-up it is deactivated.

Regulation diagram

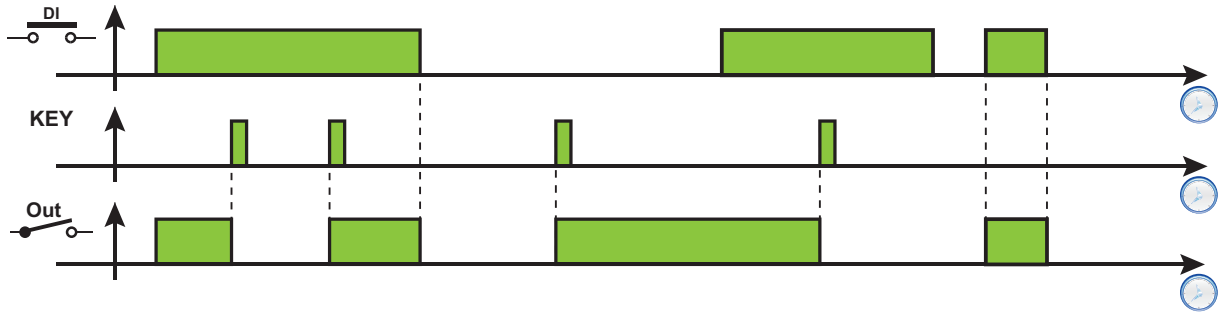

Legend: **DI** = Digital input; **KEY** = Key; **Out** = Digital output

Parameters

Parameter	Description
H08	Stand-by operating mode
H11...H18	Digital input 1...8 /polarity configuration.
i01...i02	Digital input 9 and 10 /polarity configuration (on KDX).
H21...H25	Configuration of digital outputs OUT1...OUT5
H31...H37	Key configuration.

Auxiliary Output (Light)

Description

By setting a relay as auxiliary output **Light** with parameter **H2x**= 7 and pressing the key associated with **H3x** = 3, the relay activates if it was previously off and vice-versa. The status of the relay is stored in non-volatile memory, which means when the power is restored after a black-out the device resumes operation with the status it was in before the black-out occurred.

By setting a digital input with **H1x** = ±3 or **i0x** = ±3, its activation will ensure that the relay mirrors the status of the digital input. In this case the relay status is not memorized.

Note: When the device is off, only the digital input and the associated key can change the status of the output.

Note: Always use the same activation mode for the relay set as Light. For example, if the relay is activated via Digital Input and deactivated via key, when the Digital Input status changes, the relay will not change status as it has already been deactivated via key.

Activation

The auxiliary output (Light) can be activated in one of the following ways:

- press and hold a key with **H3x** = 3
- activating a digital input with **H1x** = ±3 or **i0x** = ±3
- via RTC by setting an event
- using a Supervisor, via Modbus command (serial)
- via Link2 network

Note: During stand-by the regulator operates in accordance with parameter **H08**, while at start-up it is deactivated.

Regulation diagram

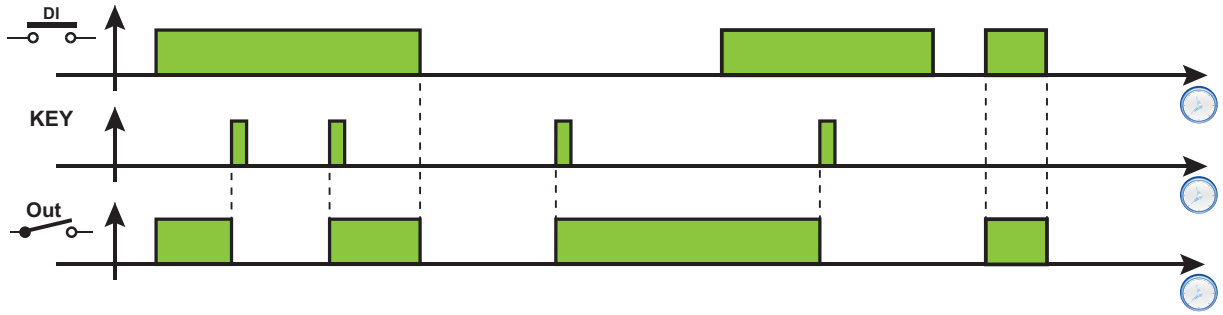

Legend: **DI** = Digital input; **KEY** = Key; **Out** = Digital output

Parameters

Parameter	Description
H08	Stand-by operating mode
H11...H18	Digital input 1...8 /polarity configuration.
i01...i02	Digital input 9 and 10 /polarity configuration (on KDX).
H21...H25	Configuration of digital outputs OUT1...OUT5
H31...H37	Key configuration.

Door control / External alarm

Description

By setting **H1x** = ±8 it is possible to connect a door switch to the digital input.

Digital Input activation:

- If **dCO** = 0: activates the alarm and disables the compressor and/or fans
- If **dCO** ≠ 0: waits until the **dCO** delay period is elapsed, activates the alarm and then disables the compressor and/or fans.

If the door is opened during a defrost cycle, the cycle is not inhibited.

Operating mode

Parameters involved:

- **dod**: inhibits the regulators if the digital input (set as door switch) is activated. Any safety timings will nevertheless be observed.
  - **0** = function disabled
  - **1** = disables fans
  - **2** = disables compressor
  - **3** = disables compressor and fans
- **EAL**: inhibits the regulators if the digital input (configured as external alarm) is activated.
  - **0** = no resources inhibited
  - **1** = compressor and defrost inhibited
  - **2** = compressor, defrost and fans inhibited
- **dOA**: Defines what should be activated/disabled when the digital input is activated/disabled (only if **PEA** ≠ 0).
  - **0** = activates compressor
  - **1** = activates fans
  - **2** = activates compressor and fans
  - **3** = disables compressor
  - **4** = disables fan
  - **5** = disables compressor and fans
- **PEA**: Links the door switch and/or external alarm to parameter **dOA**:
  - **0** = function disabled
  - **1** = function linked to the door switch
  - **2** = function linked to the external alarm
  - **3** = function linked to the door switch and the external alarm
- **dCO**: Compressor activation/shutoff delay (0...250 min)
- **dFO**: Evaporator fan activation/shutoff delay (0 ... 250 min)
- **tdO**: Door open alarm exclusion time (0...250 min). The door open alarm will be activated if the door remains open for a time greater than the value of this parameter.

The way in which parameters **dCO** and **dFO** act depends on how parameter **dOA** is configured. Refer to the figures below.

Note: If the door is opened during a defrost cycle, the defrost continues normally.

The graphs below illustrate fan operation in accordance with the value **dOA**.

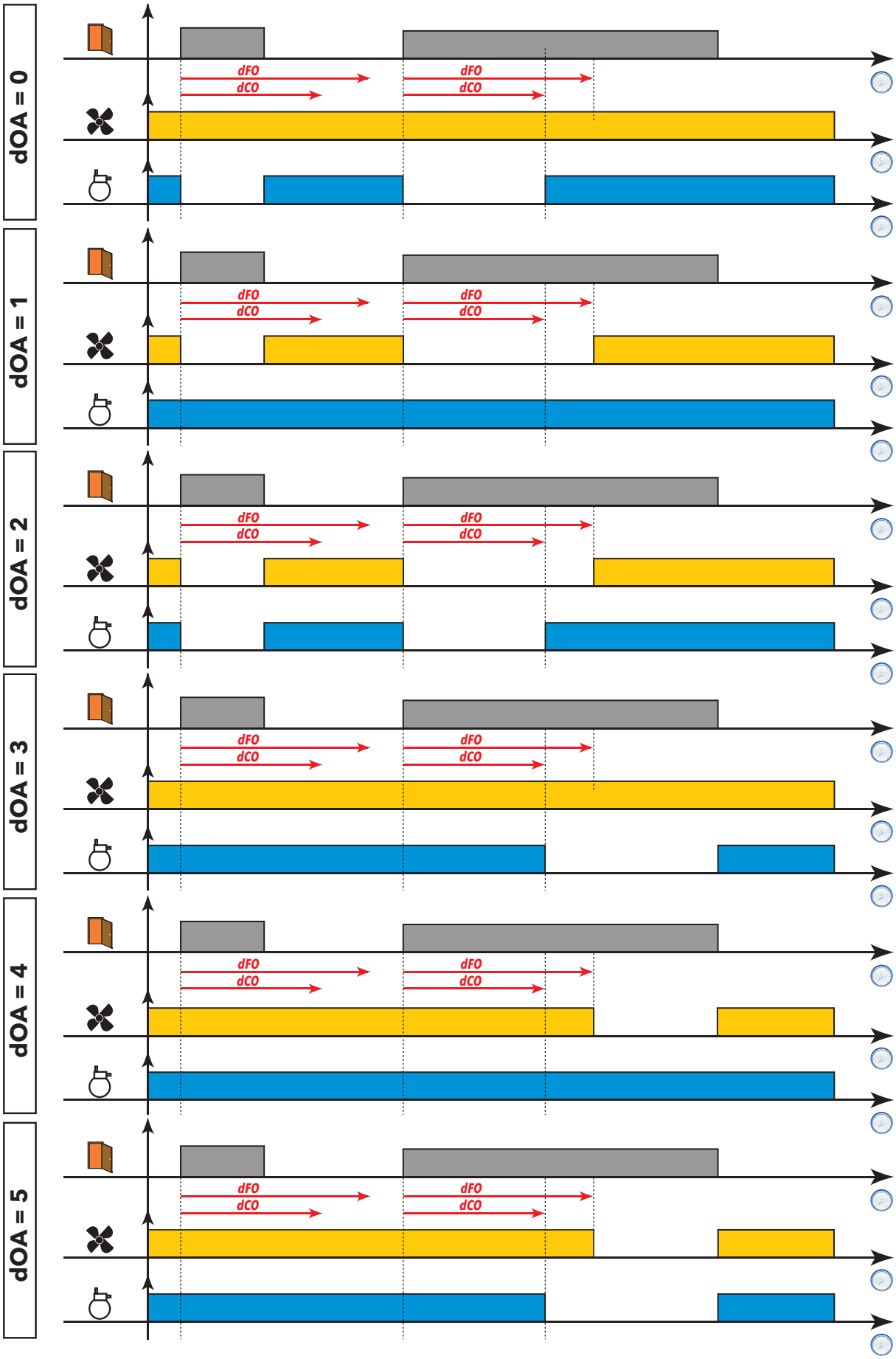

Stand-by

Description

The stand-by function maintains the controller power supply and, depending on the value of parameter **H08**:

- switches off the display or shows **oFF**
- deactivates all regulators (or not)
- excludes alarms (or not)

Note: when the device is off, all the relays are de-energized except for the key and the digital input set as light or door switch.

Activation

The stand-by function can be activated in one of the following ways:

- press and hold a key with **H3x** = 6
- digital input (only if **H1x** = ±7)
- using a Supervisor, via Modbus command (serial)

When the device is switched on via key or digital input, regular device operation begins as at start-up.

Note: the digital input takes priority over the key. If both are configured, the key command will be excluded.

Operation

When the stand-by function is activated, depending on the setting for **H08**, the following will occur:

- **H08** = **0**: display off, the regulators remain active and the instrument can activate the alarm icon when an alarm occurs
- **H08** = **1**: display off, all relays are de-energized and the alarms deactivated
- **H08** = **2**: the display shows the text **OFF**, all relays are de-energized and the alarms deactivated

On exiting stand-by function, the temperature alarm is excluded for the time period set with parameter **PAO**; the outputs are deactivated for the time period set with parameter **OdO**. The meters for parameters **PAO** and **OdO** are reset every time the controller is switched off.

If stand-by had been active when the controller was switched off (both as the result of a blackout and voluntarily), it will also be active the next time it is switched on.

Soft Start

Description

Soft Start requires the hot gas valve to open before compressor start-up to reduce the pressure differential. After compressor start-up the valve will be closed.

Operating conditions

The parameters involved in regulation are **SS1** and **SS2**.

- **SS1**: sets the time (in seconds) between hot gas valve opening and compressor startup. This count starts as soon as all protection times relating to compressor power-on have elapsed.
- **SS2**: sets the time (in seconds) between compressor startup and hot gas valve closure.

Regulation diagram

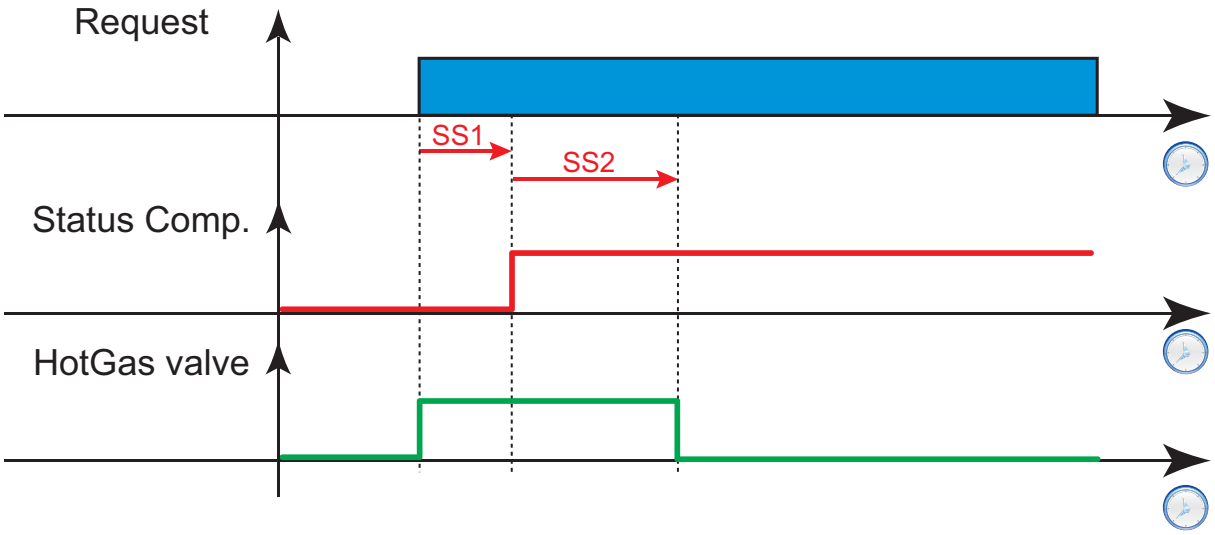

Legend: **Request** = Request cooling; **Status Comp.** = Compressor Status; **HotGas valve** = Hot Gas valve.

Pump down (Pump out)

Description

If parameter **POt**≠0, the compressor will continue to run for a time period **POt** (in seconds) after the evaporator valve closes.

Operating conditions

The liquid valve and the compressor will be active at the same time except:

- during the pump down / pump out phase
- during defrost

Regulation diagram

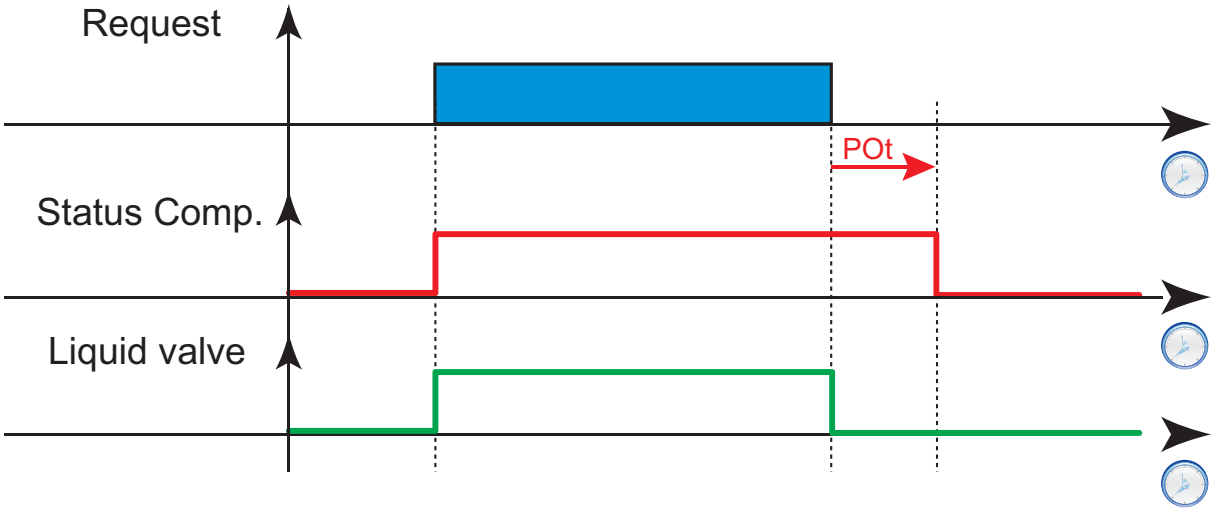

Legend: **Request** = Request cooling; **Status Comp.** = Compressor Status; **Liquid valve** = Liquid valve.

Compressor oil heater

Description

This is an ON-OFF type regulator. The heating element heating the compressor oil can be controlled with a dedicated thermostat and probe.

Operating conditions

The output configured as compressor oil heater (**H2x** = 15) will be off:

- if there is a probe error or the probe is not configured
- when the machine is in stand-by
- during the delay countdown **OdO** at startup

Regulation diagram

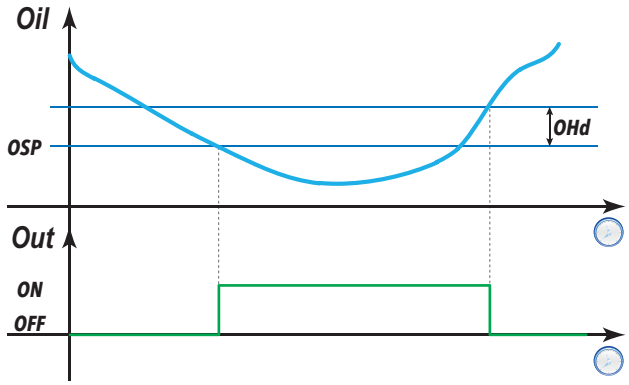

Parameters

Parameter	Description
OHP	Sets the regulation probe used.
OSP	Sets the regulation setpoint.
OHd	Sets the regulation differential.
OHS	Maximum value that can be set for the setpoint.
OLS	Minimum value that can be set for the setpoint.

Counter Cleaning Function

Description

This function is used for counter maintenance and:

- to activate the function
- advance along "Clean status 1" and "Clean status 2" (**A** and **B**) by pressing the associated key (**H3x** = 9).

Operating conditions

If activated, compressor 2 will use the same setpoint and differential as compressor 1. If offsets are applied to the setpoint and/or to the differential due to the energy saving function (or other conditions), the second compressor will also be influenced by these offsets.

During normal operation:

- Pressing the associated key (**KEY**) offers entry to “Clean status 1” mode (**A**) and:
  - fans on and all other loads deactivated
  - fan icon (**FAN**) on
  - display shows label **CLn**
- On pressing the associated key (**KEY**) a second time, the device switches to “Clean status 2” mode (**B**) and:
  - all loads are deactivated
  - display shows label **CLn**
- Pressing the associated key (**KEY**) a third time means the device exits the counter Cleaning Function and resumes normal operation.

Note: If there is no power, when the device is started up again it resumes normal operation (the function is canceled)

Regulation diagram

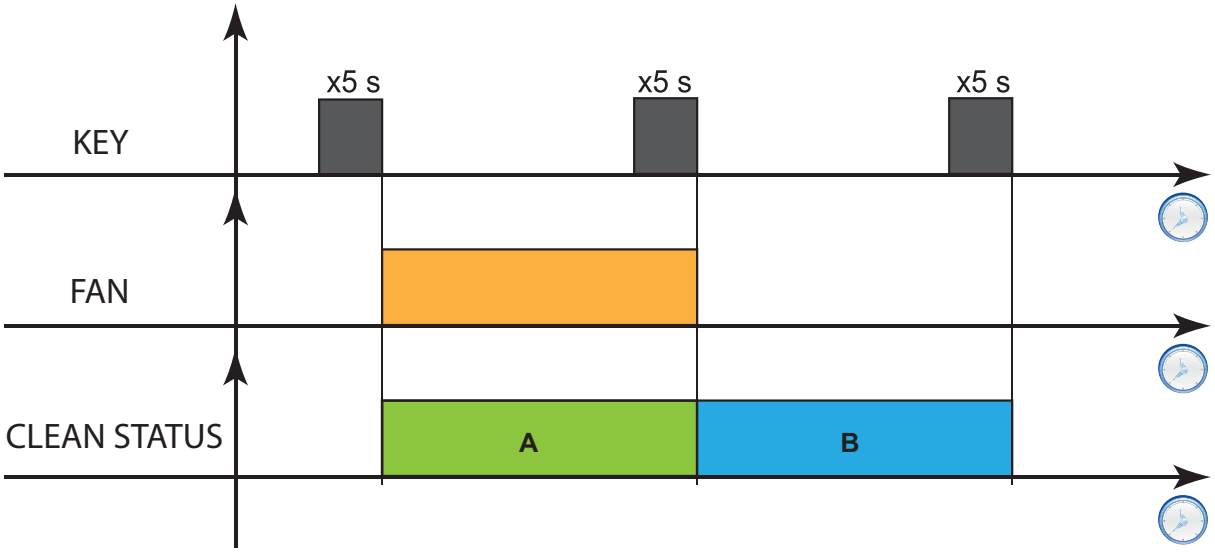

Legend: **KEY** = Key; **FAN** = Fans; **CLEAN STATUS** = Counter cleaning function

Practical examples

Contents

This section includes the following topics:

Floating suction for positive superheat ≥ 4 K) 162
Floating suction with low superheat (~ 0 K) 163

Floating suction for positive superheat ≥ 4 K)

Application

This example describes a “Floating suction for positive superheat” application.

If the device is connected to a Televis**Go** and a **EWCM 9000 PRO DOMINO**, its **FloatingSuctionDOMINO** algorithm can be used.

The Televis**Go** will carry out the following steps:

- Reading the demand for all associated system evaporators originating from the device
- Calculating the increase / reduction of suction pressure parameters within the limits
- Sending the suction pressure setpoint to the **EWCM 9000 PRO DOMINO** device

Diagram

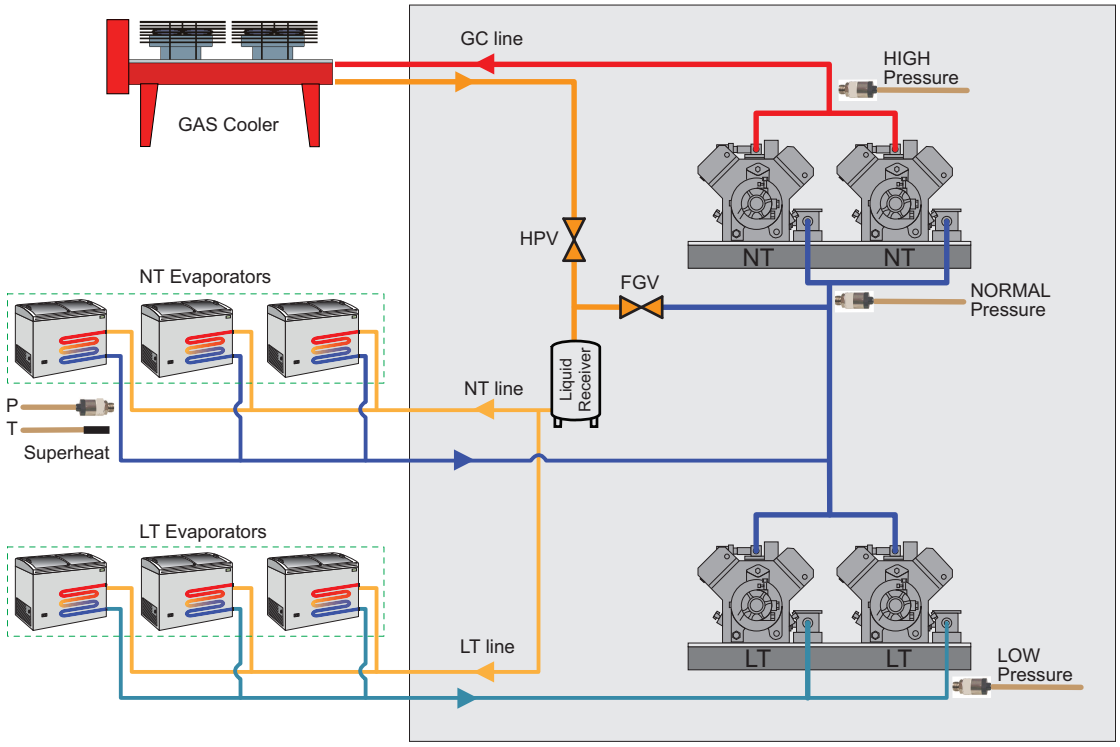

Legend:

- **Gas Cooler** = Gas Cooler
- **NT Evaporator** = Normal temperature evaporators
- **LT Evaporator** = Low temperature evaporators
- **Liquid Receiver** = Liquid receiver
- **Heat Exchanger** = Heat exchanger
- **HIGH Pressure** = High pressure transducer
- **NORMAL Pressure** = Normal temperature (NT) suction pressure transducer
- **LOW Pressure** = Low pressure transducer
- **Superheat** = Temperature sensor (T) and superheat pressure transducer (P)
- **GC line** = Gas Cooler Line
- **NT line** = Normal temperature line
- **LT line** = Low temperature line
- **HPV** = High pressure valve
- **FGV** = Flash gas valve

Floating suction with low superheat (~ 0 K)

Application

This example describes a “Floating suction with low superheat and near-zero values” application.

If the device is connected to a Televis**Go** and a **EWCM 9000 PRO DOMINO**, its **FloatingSuctionDOMINO** algorithm can be used.

The Televis**Go** will carry out the following steps:

- Reading the demand for all associated system evaporators originating from the device
- Calculating the increase / reduction in suction pressure parameters within the limits
- Sending the suction pressure setpoint to the **EWCM 9000 PRO DOMINO** device

Wiring diagrams

Example 1: Regenerative exchanger in the liquid receiver.

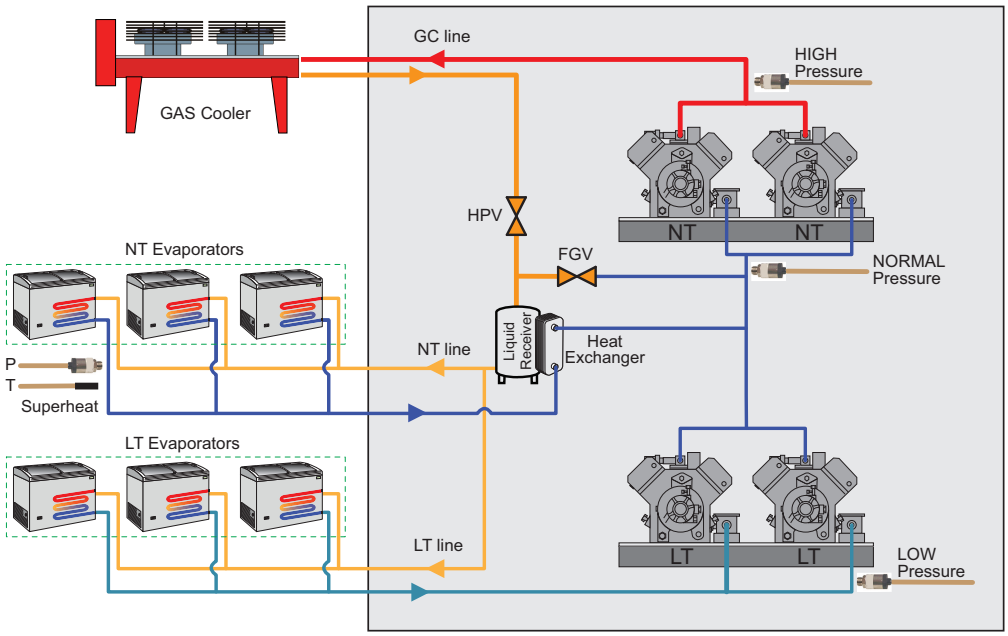

Example 2: Regenerative exchanger in series with the Gas Cooler.

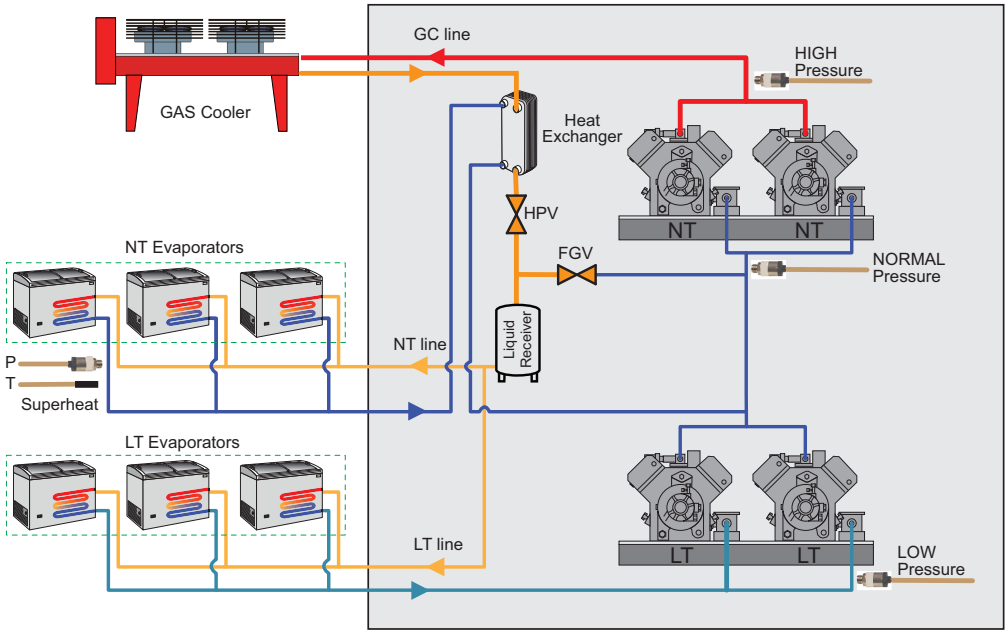

Example 3: Regenerative exchanger on the high pressure line.

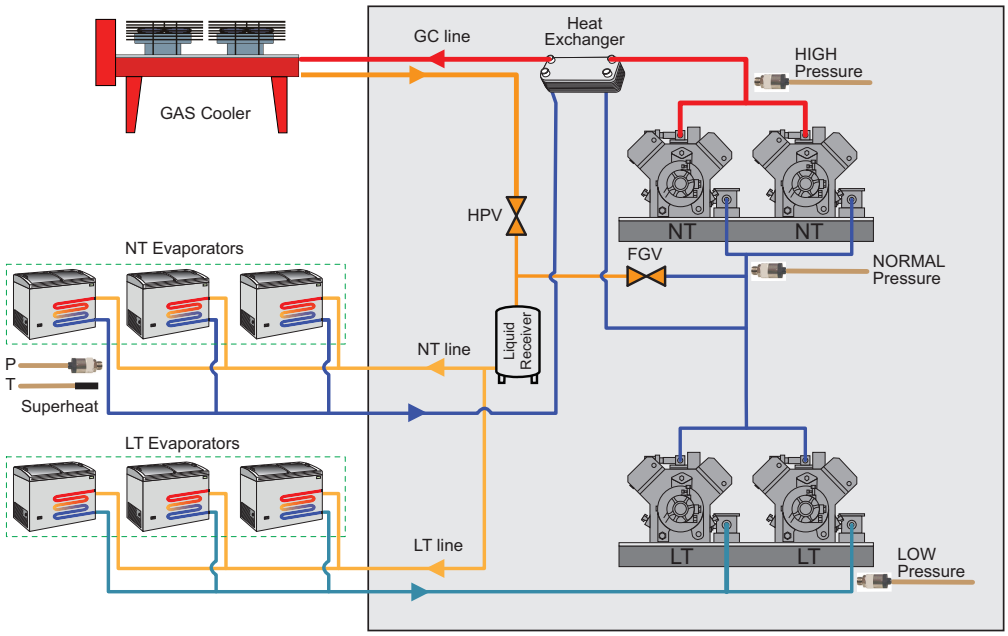

Legend:

- **Gas Cooler** = Gas Cooler
- **NT Evaporator** = Normal temperature evaporators
- **LT Evaporator** = Low temperature evaporators
- **Liquid Receiver** = Liquid receiver
- **Heat Exchanger** = Heat exchanger
- **HIGH Pressure** = High pressure transducer
- **NORMAL Pressure** = Normal temperature (NT) suction pressure transducer
- **LOW Pressure** = Low pressure transducer
- **Superheat** = Temperature sensor (T) and superheat pressure transducer (P)
- **GC line** = Gas Cooler Line
- **NT line** = Normal temperature line
- **LT line** = Low temperature line
- **HPV** = High pressure valve
- **FGV** = Flash gas valve

Diagnostics

Contents

This section includes the following topics:

Alarms and indications 166
Probe alarms 168
Minimum and maximum temperature alarm 169
Defrost ended due to timeout alarm 171
External alarm 172
Door open alarm 173

Alarms and indications

Detecting an alarm condition

If there is an alarm condition, the alarm icon ((●)) comes on steadily. If present and enabled, the buzzer and alarm relay are also activated.

Note: If alarm exclusion timings are in progress, the alarm is not signaled.

All active alarms, except those relating to probe error, are listed in the **ALr** folder within the “Machine status" menu.

Alarms resulting from a probe error will be shown on the display by means of label E1...E8, EL or Ei depending on whether it concerns Pb1...Pb8, Link2 or the Virtual Probe respectively.

Silencing the buzzer

Press any key or use the menu function: the buzzer is silenced, the alarm icon ((●)) flashes and the alarm relay is de-energized.

Alarms legend

Code	Description	Cause	Effects	Solutions
E1	Probe Pb1 in error	• Reading of values outside the operating interval • Probe or corresponding wiring in short-circuit or open circuit	• **E1** shown • Steady alarm icon ((●))	• Verify the probe type (**H00**). • Verify the probe wiring. • Replace probe.
E2	Probe Pb2 in error	• Reading of values outside the operating interval • Probe or corresponding wiring in short-circuit or open circuit	• **E2** shown • Steady alarm icon ((●))	• Verify the probe type (**H00**). • Verify the probe wiring. • Replace probe.
E3	Probe Pb3 in error	• Reading of values outside the operating interval • Probe or corresponding wiring in short-circuit or open circuit	• **E3** shown • Steady alarm icon ((●))	• Verify the probe type (**H00**). • Verify the probe wiring. • Replace probe.
E4	Probe Pb4 in error	• Reading of values outside the operating interval • Probe or corresponding wiring in short-circuit or open circuit	• **E4** shown • Steady alarm icon ((●))	• Verify the probe type (**H00**). • Verify the probe wiring. • Replace probe.
E5	Probe Pb5 in error	• Reading of values outside the operating interval • Probe or corresponding wiring in short-circuit or open circuit	• **E5** shown • Steady alarm icon ((●))	• Verify the probe type (**H00**). • Verify the probe wiring. • Replace probe.
E6	Probe Pb6 in error (4...20 mA)	• Reading of values outside the operating interval • Probe or corresponding wiring in short-circuit or open circuit	• **E6** shown • Steady alarm icon ((●))	• Verify the probe type. • Verify the probe wiring. • Replace probe.
E7	Probe Pb7 in error (ratiometric)	• Reading of values outside the operating interval • Probe or corresponding wiring in short-circuit or open circuit	• **E7** shown • Steady alarm icon ((●))	• Verify the type of probe (**trA**). • Verify the probe wiring. • Replace probe.
E8	Probe Pb8 on KDX in error (4...20 mA)	• Reading of values outside the operating interval • Probe or corresponding wiring in short-circuit or open circuit	• **E8** shown • Steady alarm icon ((●))	• Verify the probe type. • Verify the probe wiring. • Replace probe.
EL	Link2 probe in error	• Reading of values outside the operating interval • Probe or corresponding wiring in short-circuit or open circuit	• **EL** appears • Steady alarm icon ((●))	• Verify the probe type. • Verify the probe wiring. • Replace probe.
Ei	Virtual probe in error	• Reading of values outside the operating interval • Probe or corresponding wiring in short-circuit or open circuit	• **Ei** appears • Steady alarm icon ((●))	• Verify the probe type. • Verify the probe wiring. • Replace probe.
AL1	Low temperature alarm 1	Value read by probe 1 < **LA1** after time equal to **tA1** (see section Minimum and maximum temperature alarm).	• Alarm **AL1** added to folder **ALr** • No effect on regulation	Wait for the temperature read by the probe selected with **rA1** to rise above the alarm threshold (**LA1**+**AFd**).
AH1	High temperature alarm 1	Value read by probe 1 > **HA1** after time equal to **tA1** (see section Minimum and maximum temperature alarm).	• Alarm **AH1** added to folder **ALr** • No effect on regulation	Wait for the temperature read by the probe selected with **rA1** to fall below the alarm threshold (**HA1**-**AFd**).

Code	Description	Cause	Effects	Solutions
AL2	Low temperature alarm 2	Value read by probe 2 < **LA2** after time equal to **tA2** (see section Minimum and maximum temperature alarm).	• Alarm **AL2** added to folder **ALr** • No effect on regulation	Wait for the temperature read by the probe selected with **rA2** to rise above the alarm threshold (**LA2**+**AFd**).
AH2	High temperature alarm 2	Value read by probe 2 > **HA2** after time equal to **tA2** (see section Minimum and maximum temperature alarm).	• Alarm **AH2** added to folder **ALr** • No effect on regulation	Wait for the temperature read by the probe selected with **rA2** to fall below the alarm threshold (**HA2**-**AFd**).
OPd	Door open alarm	Digital input activation (**H1x** = ±8 or **i0x** = ±8) for a time greater than **tdo**.	• Alarm **OPd** added to folder **ALr** • Steady alarm icon • Regulator inhibited, on the basis of parameter **dod**	• Close the door • Increase the value of parameter **OAO**
EA	External alarm	Digital input activation (**H1x** = ±6 or **i0x** = ±6).	• Alarm **EA** added to folder **ALr** • Steady alarm icon • Regulation inhibited if **EAL** = y	Verify and remove the external cause that caused the alarm on the digital input.
Prr	Preheat alarm	Preheat input regulator alarm active.	• **Prr** shown • Compressor icon flashing • Regulation inhibited (compressor and fans) **Note**: defrost will also be inhibited if it is cycle inversion or hot gas type.	Preheat input regulator OFF.
Ad2	Defrost end due to timeout	End of defrost due to timeout, instead of the defrost end temperature being reached.	• Alarm **Ad2** added to folder **ALr** • Steady alarm icon	Wait for the next defrost for automatic deactivation.
E10	Clock alarm	• Clock (RTC) battery low • RTC not working.	• Alarm **E10** added to folder **ALr** • Functions connected to the clock not present or not synchronized with the current timings	Set the correct time. If the error persists, replace the instrument (RTC battery low)
EEP	Valve MOP alarm	The saturation temperature has exceeded the threshold value set by parameter **Hot**.	• Alarm **EEP** added to folder **ALr** • Steady alarm icon	The temperature falls back below the value **Hot**.
EEt	Maximum valve output alarm	The output valve is fully open (see parameter **U02**).	• Alarm **EEt** added to folder **ALr** • Steady alarm icon	• Verify valve connection • Verify superheat probe connection / operation.
EES	Saturation probe in error	• Reading of values outside the operating interval • Probe or corresponding wiring in short-circuit or open circuit	• **EES** shown • Steady alarm icon	• Verify the type of probe (**rSP**). • Verify the probe wiring. • Replace probe.
LEL	Two thresholds regulator low detection threshold	The value remains under the threshold **ALL** for a time period greater than **AL1**.	• Alarm **LEL** added to folder **ALr** • Steady alarm icon	The temperature rises back above the value **ALL**.
LEH	Two thresholds regulator high detection threshold	The value remains over the threshold **ALH** for a time period greater than **AL2**.	• Alarm **LEH** added to folder **ALr** • Steady alarm icon	The temperature falls back below the value **ALH**.
PAn	Panic alarm (only present with KDX terminal)	Activation of suitably configured digital input (**H1x** = ±19 or **i0x** = ±19).	• Alarm **PAn** added to folder **ALr** • Steady alarm icon • Steady panic alarm icon • No effect on regulation	Verify and remove the external cause that caused the alarm on the digital input.
ELi	Incorrect number of devices	The number of instruments detected within the Link2 network is different from the number set with **L11**.	• **ELi** appears • Steady alarm icon	Align the number of devices in the Link2 network with the value of parameter **L11**.

Note: All alarms are deactivated automatically when the cause is removed.

Probe alarms

Description

When one of the probes is outside the nominal operating range or if the probe is open or short-circuited, an alarm is generated if this condition persists for around 10 seconds.

For all probes, the error condition causes the following actions:

- alarm code appears on the display (see table)
- alarm icon comes on steadily and alarm relay activated (if present)

When the probe error condition ceases, regulation resumes as normal. During the probe error condition, the defrost interval count continues as normal.

Alarm acknowledgment

Codes **E1**...**E8**, **EL** and **Ei**, if simultaneous, are shown in the following sequence: E1 x 2 seconds, E2 x 2 seconds, E3 x 2 seconds, etc.

In alarm condition, press any key or use the menu function to acknowledge the relay configured as alarm (if present) while the alarm condition persists. The alarm icon will begin to flash.

Note: The probe error alarm is not stored by the device.

Alarm codes

Code	Description
E1	Probe Pb1 in error
E2	Probe Pb2 in error
E3	Probe Pb3 in error
E4	Probe Pb4 in error
E5	Probe Pb5 in error
E6	Probe Pb6 (4...20 mA) in error
E7	Probe Pb7 (ratiometric) in error
E8	Probe Pb8 (4...20 mA via KDX) in error
EL	Link2 probe in error / not working
Ei	VIRTUAL probe not working

Parameters

Parameter	Description
Ont	Compressor output on time if regulation probe in error
OFt	Compressor output off time if regulation probe in error

Minimum and maximum temperature alarm

Description

The alarms operate according to the temperature read by regulation probe 1/2. The accepted temperature interval limits are set using parameters **HA1/2** and **LA1/2**.

Note: High and low temperature alarms are excluded during a defrost. The triggering of these alarms does not have any effect on the regulation in progress.

Alarm acknowledgment

In alarm condition, press any key or use the menu function to acknowledge the relay configured as alarm (if present) while the alarm condition persists.

The alarm icon will begin to flash.
The probe error alarm is not stored by the device.

Alarm codes

Code	Description
AH1	Probe 1 high temperature alarm
AL1	Probe 1 low temperature alarm
AH2	Probe 2 high temperature alarm
AL2	Probe 2 low temperature alarm

Absolute or relative temperature values

Depending on the value of parameter **Att**, the temperature is expressed as an absolute or relative value (differential in respect to the setpoint):

Att value	Label	Description
0	**Ab**	Absolute values. The **HA1/2** and **LA1/2** values must have a sign.
1	**rE**	Relative values. **HA1/2** > 0 and **LA1/2** < 0.

Alarm conditions

The maximum/minimum alarm is triggered when the temperature of probe 1/2 is:

- Maximum alarm: **≥ HA1/2** if Att = AbS(0) and **≥ (SP1/2 + HA1/2)** if Att = rEL(1)
- Minimum alarm: **≤ LA1/2** if Att = AbS(0) and **≤ (SP1/2 + LA1/2)** if Att = rEL(1)

If Att=AbS(0) set the values of **HA1/2** and **LA1/2** with a sign.
If Att=rEL(1) set **HA1/2** > 0 and **LA1/2** < 0.

When one of the above conditions arises, if there are no alarm exclusion times applied (see alarm exclusion parameters), the alarm icon comes on and the relay configured as alarm (if present) is activated.

The alarm reset takes place when the temperature of probe 1/2 is:

- Reset after maximum alarm:
  ≤ (HA1/2 - AFd) if Att = AbS(0) and **≤ (SP1/2 + HA1/2 - AFd)** if Att = rEL(1)
- Reset after minimum alarm:
  ≥ (LA1/2 + AFd) if Att = AbS(0) and **≥ (SP1/2 + LA1/2 + AFd)** if Att = rEL(1)

Operating diagrams

Operation with Att=0 (absolute values)

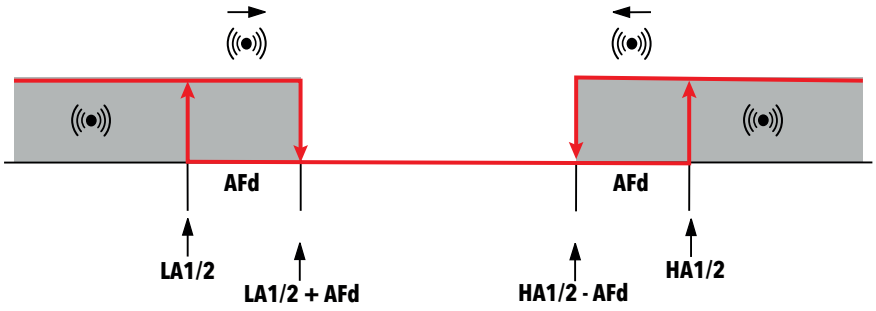

Operation with Att=1 (relative values)

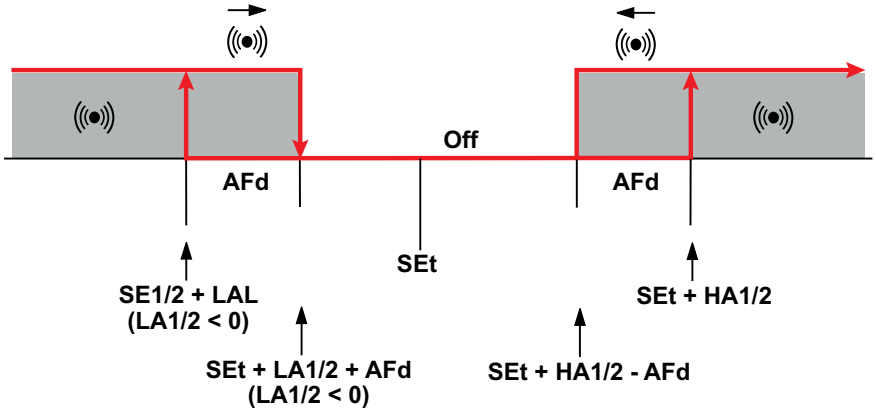

Parameters

Parameter	Description
Att	Expression mode for **HAL** and **LAL** values (absolute or relative)
AFd	Alarm activation differential
HA1	Probe 1 maximum alarm threshold
LA1	Probe 1 minimum alarm threshold
HA2	Probe 2 maximum alarm threshold
LA2	Probe 2 minimum alarm threshold
PAO	Temperature alarm exclusion time from startup
dAO	Exclusion time for temperature alarms after a defrost cycle
OAO	Exclusion time for temperature alarms after closing the door
tA1	Temperature alarm 1 signaling delay time
tA2	Temperature alarm 2 signaling delay time

Defrost ended due to timeout alarm

Description

The alarm regulator is activated with no delay if the defrost ends due to timeout, instead of the defrost end temperature being reached by the second probe.

The action consists of:

- the alarm icon (•) coming on steadily
- recording Label Ad2 in the alarms menu

Automatic deactivation takes place when the next defrost begins.

It is therefore possible to switch off the alarm icon using the normal acknowledgment procedure, while to remove the alarm indication you will need to wait for the next defrost cycle to start.

Alarm acknowledgment

In alarm condition, press any key or use the menu function to acknowledge the relay configured as alarm (if present) while the alarm condition persists. The alarm icon (•) will begin to flash.

Alarm codes

Code	Description
Ad2	Defrost alarm on Pb2

Parameters

Parameter	Description
dE1	Evaporator 1 defrost timeout
dE2	Evaporator 2 defrost timeout
dAt	Defrost ended due to timeout alarm signaling

External alarm

Description

When activating the digital input, the alarm regulator will be activated with the delay set by parameter **dAd**, and this alarm remains until the next time the digital input is deactivated.

The action consists of:

- the alarm icon coming on steadily
- recording Label EA in the alarms menu
- activating the relay configured as alarm (if enabled)
- deactivating regulation if parameter **EAL** requires it.

The alarm relay can be unlocked but the regulators remain inhibited until the digital input is deactivated.

Parameter **EAL** can assume the following values:

- **EAL** = 0: an external alarm does not inhibit any resources
- **EAL** = 1: an external alarm inhibits the compressor and defrost
- **EAL** = 2: an external alarm inhibits the compressor, defrost and the fans.

Alarm acknowledgment

In alarm condition, press any key or use the menu function to acknowledge the relay configured as alarm (if present) while the alarm condition persists. The alarm icon will begin to flash.

Alarm codes

Code	Description
EA	External alarm

Parameters

Parameter	Description
EAL	External alarm inhibits the regulators

Door open alarm

Description

The door switch alarm can be activated via a suitably configured digital input (**H1x**=± 8 or **i0x**=± 8).

When the digital input is activated (door opened), once delay **tdO** has elapsed, the door open alarm is indicated in the alarms folder and the alarm icon (•) and alarm relay come on. The label **Opd** is shown.

The action consists of:

- the alarm icon (•) coming on steadily
- recording Label **OPd** in the alarms menu
- activating the relay configured as alarm

As for the other alarms, the relay can be deactivated by pressing an acknowledgment key; the alarm icon will flash and label **OPd** remains in the menu until the door is closed.

If the door is opened, the regulator will work based on the value of parameter **dOd**.

It can assume the following values:

- **dOd** = 0: no resource inhibited
- **dOd** = 1: fans inhibited
- **dOd** = 2: compressor inhibited
- **dOd** = 3: fans and compressor inhibited

If the door open alarm inhibits the compressor, the latter can still be reactivated even if the door remains open by setting parameter **dCO**.

Alarm acknowledgment

In alarm condition, press any key or use the menu function to acknowledge the relay configured as alarm (if present) while the alarm condition persists. The alarm icon will begin to flash.

Alarm codes

Code	Description
OPd	Door open alarm

Parameters

Par.	Description
dOd	Digital input shuts off utilities.
dOA	Behavior forced from digital input (if **PEA** ≠ 0).
PEA	Selection of digital input with resource inhibiting/unlocking function.
dCO	Compressor activation delay from acknowledgment.
dFO	Fan activation/switch-off delay after consent (DI activation).
tdO	Door open alarm exclusion time

Parameters

Contents

This section includes the following topics:

User parameters RTX 600 /V 175
Installer parameters RTX 600 /V 187

User parameters RTX 600 /V

PAR	Description	Range	UM	Value	AP1	AP2	AP3	AP4	AP5	AP6	AP7	AP8
rP1	Sets the probe used by thermostat 1. • **diS** (0) = disabled • **Pb1** (1) = probe Pb1 • **Pb2** (2) = probe Pb2 • **Pb3** (3) = probe Pb3 • **Pb4** (4) = probe Pb4 • **Pb5** (5) = probe Pb5 • **Pbi** (6) = virtual probe • **LP** (7) = remote probe • **PFi** (8) = filtered virtual probe	diS, Pb1...Pb5, Pbi, LP, PFi	num	Pb1	Pb1	Pb1	Pb1	Pb1	Pb1	Pb1	Pb1	Pb1
SP1	Thermostat 1 regulation setpoint.	LS1...HS1	°C/°F	0.0	0.0	3.0	-18.0	0.0	3.0	-18.0	-18.0	-18.0
dF1	Tripping differential for thermostat 1 (absolute or relative). **Note**: always a value other than 0.	-58.0...302	°C/°F	2.0	2.0	2.0	2.0	2.0	2.0	2.0	2.0	2.0
HS1	Maximum value that can be attributed to setpoint SP1. **Note**: The two sets are interdependent: HS1 cannot be less than LS1 and vice versa.	LS1...HdL	°C/°F	20.0	20.0	20.0	20.0	20.0	20.0	20.0	20.0	20.0
LS1	Minimum value that can be attributed to setpoint SP1. **Note**: The two sets are interdependent: LS1 cannot be greater than HS1 and vice versa.	LdL...HS1	°C/°F	-35.0	-35.0	-35.0	-35.0	-35.0	-35.0	-35.0	-35.0	-35.0
Ont	Regulator switch-on time for faulty probe: • if **Ont** = 1 and **OFt** = 0 compressor always on • if **Ont** = 1 and **OFt** > 0 compressor in duty cycle	0...250	min	3	3	3	3	3	3	3	3	3
OFt	Regulator switch-off time for faulty probe: • if **OFt** = 1 and **Ont** = 0 compressor always off • if **OFt** = 1 and **Ont** > 0 compressor in duty cycle	0...250	min	3	3	3	3	3	3	3	3	3
OdO	Output activation delay time from switching on the device or after a power outage. **0** = not active.	0...250	min	0	0	0	0	0	0	0	0	0
POt	Pump down time. Sets the running time after evaporator valve closure.	0...250	s	0	0	0	0	0	0	0	0	0
dP1	Sets the probe used by defrost 1 (only if **rE**≠0). • **diS** (0) = disabled • **Pb1** (1) = probe Pb1 • **Pb2** (2) = probe Pb2 • **Pb3** (3) = probe Pb3 • **Pb4** (4) = probe Pb4 • **Pb5** (5) = probe Pb5 • **Pbi** (6) = virtual probe • **LP** (7) = remote probe • **PFi** (8) = filtered virtual probe	diS, Pb1...Pb5, Pbi, LP, PFi	num	Pb2	Pb2	Pb2	Pb2	Pb2	Pb2	Pb2	Pb2	Pb3
dty	Type of defrost. • **0** = electric heater defrost • **1** = cycle inversion defrost • **2** = hot gas defrost for plug-in systems (with built-in compressor) • **3** = hot gas defrost for systems with remote group • **4** = modulated electric heater defrost (Smart Defrost).	0...4	num	0	0	0	0	0	0	0	0	0

PAR	Description	Range	UM	Value	AP1	AP2	AP3	AP4	AP5	AP6	AP7	AP8
dit	Time interval between the start of two subsequent defrost operations. **0** = function disabled (defrost NEVER takes place).	0...250	hours	24	24	24	24	24	24	24	24	24
dCt	Selects defrost interval count mode. • **0** = defrost disabled • **1** = hours of compressor operation (DIGIFROST® method); defrosting active ONLY with compressor on **Note**: the compressor run time is calculated independently of the evaporator probe (the calculation is active even if the evaporator probe is absent or not working). • **2** = hours of device operation; counting is always active when the machine is on and starts at every power-on • **3** = compressor stop. Each time the compressor stops, a defrosting cycle is performed in accordance with dty • **4** = RTC • **5** = temperature.	0...5	num	4	4	4	4	4	4	4	4	4
dE1	Defrost 1 timeout. Sets the maximum duration of defrost 1.	1...250	min	30	30	30	30	30	30	30	30	30
dS1	Defrost 1 end temperature (only if **dP1**≠diS)	-58.0...302	°C/°F	7.0	7.0	7.0	7.0	7.0	7.0	7.0	7.0	7.0
dSS	Defrost start temperature threshold (only if **dCt**=5).	-58.0...302	°C/°F	-5.0	-5.0	-5.0	-5.0	-5.0	-5.0	-5.0	-5.0	-5.0
dPO	Determines whether, upon switching on, the device activates defrosting (providing that the temperature measured on the evaporator permits it). • **no** (0) = no, do not defrost at switch-on • **yES** (1) = yes, defrost at switch-on.	no/yES	flag	no	no	no	no	no	no	no	no	no
dPH	Regular defrost start hour (only if **dCt**=4). • **0...23** = start hour • **24** = disabled.	0...24	hours	24	24	24	24	24	24	24	24	24
dPn	Regular defrost start minutes (only if **dCt**=4).	0...59	min	0	0	0	0	0	0	0	0	0
dPd	Interval between one regular defrost and the next (only if **dCt**=4).	1...7	days	1	1	1	1	1	1	1	1	1
Fd1	1st weekend/holiday day (only if **dCt**=4). • **0...6** = start day • **7** = disabled.	0...7	days	7	7	7	7	7	7	7	7	7
Fd2	2nd weekend/holiday day (only if **dCt**=4). • **0...6** = start day • **7** = disabled.	0...7	days	7	7	7	7	7	7	7	7	7
Fdn	Number of multiple defrosts during one weekday (only if **dCt**=4). **0** = disabled.	0...250	num	0	0	0	0	0	0	0	0	0
FFn	Number of multiple defrosts during one weekend/holiday day (only if **dCt**=4). **0** = disabled.	0...250	num	0	0	0	0	0	0	0	0	0
PrH	Basin heater pre-activation time before defrost begins.	0...255	min	0	0	0	0	0	0	0	0	0
d1H	1st weekday defrost start hour (only if **dCt**=4). • **0...23** = start hour • **24** = disabled	0...24	hours	0	0	0	0	0	0	0	0	0

PAR	Description	Range	UM	Value	AP1	AP2	AP3	AP4	AP5	AP6	AP7	AP8
d1n	1st weekday defrost start minutes (only if **dCt**=4).	0...59	min	0	0	0	0	0	0	0	0	0
d2H	2nd weekday defrost start hour (only if **dCt**=4). • **d1H...23** = start hour • **24** = disabled	d1H...24	hours	6	6	6	6	6	6	6	6	6
d2n	2nd weekday defrost start minutes (only if **dCt**=4).	0...59	min	0	0	0	0	0	0	0	0	0
d3H	3rd weekday defrost start hour (only if **dCt**=4). • **d2H...23** = start hour • **24** = disabled.	d2H...24	hours	12	12	12	12	12	12	12	12	12
d3n	3rd weekday defrost start minutes (only if **dCt**=4).	0...59	min	0	0	0	0	0	0	0	0	0
d4H	4th weekday defrost start hour (only if **dCt**=4). • **d3H...23** = start hour • **24** = disabled.	d3H...24	hours	18	18	18	18	18	18	18	18	18
d4n	4th weekday defrost start minutes (only if **dCt**=4).	0...59	min	0	0	0	0	0	0	0	0	0
d5H	5th weekday defrost start hour (only if **dCt**=4). • **d4H...23** = start hour • **24** = disabled	d4H...24	hours	24	24	24	24	24	24	24	24	24
d5n	5th weekday defrost start minutes (only if **dCt**=4).	0...59	min	0	0	0	0	0	0	0	0	0
d6H	6th weekday defrost start hour (only if **dCt**=4). • **d5H...23** = start hour • **24** = disabled	d5H...24	hours	24	24	24	24	24	24	24	24	24
d6n	6th weekday defrost start minutes (only if **dCt**=4).	0...59	min	0	0	0	0	0	0	0	0	0
F1H	1st weekend/holiday defrost start hour (only if **dCt**=4). • **0...23** = start hour • **24** = disabled	0...24	hours	0	0	0	0	0	0	0	0	0
F1n	1st weekend/holiday defrost start minutes (only if **dCt**=4).	0...59	min	0	0	0	0	0	0	0	0	0
F2H	2nd weekend/holiday defrost start hour (only if **dCt**=4). • **F1H...23** = start hour • **24** = disabled	F1H...24	hours	6	6	6	6	6	6	6	6	6
F2n	2nd weekend/holiday defrost start minutes (only if **dCt**=4).	0...59	min	0	0	0	0	0	0	0	0	0
F3H	3rd weekend/holiday defrost start hour (only if **dCt**=4). • **F2H...23** = start hour • **24** = disabled	F2H...24	hours	12	12	12	12	12	12	12	12	12
F3n	3rd weekend/holiday defrost start minutes (only if **dCt**=4).	0...59	min	0	0	0	0	0	0	0	0	0
F4H	4th weekend/holiday defrost start hour (only if **dCt**=4). • **F3H...23** = start hour • **24** = disabled	F3H...24	hours	18	18	18	18	18	18	18	18	18
F4n	4th weekend/holiday defrost start minutes (only if **dCt**=4).	0...59	min	0	0	0	0	0	0	0	0	0

PAR	Description	Range	UM	Value	AP1	AP2	AP3	AP4	AP5	AP6	AP7	AP8
F5H	5th weekend/holiday defrost start hour (only if **dCt**=4). • **F4H...23** = start hour • **24** = disabled	F4H...24	hours	24	24	24	24	24	24	24	24	24
F5n	5th weekend/holiday defrost start minutes (only if **dCt**=4).	0...59	min	0	0	0	0	0	0	0	0	0
F6H	6th weekend/holiday defrost start hour (only if **dCt**=4). • **F5H...23** = start hour • **24** = disabled	F5H...24	hours	24	24	24	24	24	24	24	24	24
F6n	6th weekend/holiday defrost start minutes (only if **dCt**=4).	0...59	min	0	0	0	0	0	0	0	0	0
FP1	Sets the probe used by the evaporator fans during normal operation. • **diS** (0) = disabled • **Pb1** (1) = probe Pb1 • **Pb2** (2) = probe Pb2 • **Pb3** (3) = probe Pb3 • **Pb4** (4) = probe Pb4 • **Pb5** (5) = probe Pb5 • **Pbi** (6) = virtual probe • **LP** (7) = remote probe • **PFi** (8) = filtered virtual probe.	diS, Pb1...Pb5, Pbi, LP, PFi	num	Pb2	Pb2	Pb2	Pb2	Pb2	Pb2	Pb2	Pb2	Pb3
FSt	Fan disabling temperature. If the value read is greater than **FSt**, the fans will be stopped. The value is positive or negative (only if **FP1**≠diS).	-58.0...302	°C/°F	5.0	5.0	5.0	5.0	5.0	5.0	5.0	5.0	5.0
FAd	Evaporator fan activation differential (only if **FP1**≠dis).	1.0...25.0	°C/°F	1.0	1.0	1.0	1.0	1.0	1.0	1.0	1.0	1.0
dt	Dripping time.	0...250	min	0	0	0	0	0	0	0	0	0
dFd	Evaporator fan operating mode during a defrost. • **OFF**(0) = Fans off • **On**(1) = Fans on	OFF/On	flag	On	On	On	On	On	On	On	On	On

<table>
<tr><th>PAR</th><th>Description</th><th>Range</th><th>UM</th><th>Value</th><th>AP1</th><th>AP2</th><th>AP3</th><th>AP4</th><th>AP5</th><th>AP6</th><th>AP7</th><th>AP8</th></tr>
<tr><td>FCO</td><td>Evaporator fan operating mode.
<table><tr><th rowspan="2">FP1</th><th rowspan="2">FCo</th><th colspan="2">day</th><th colspan="2">night</th></tr><tr><th>Cn</th><th>Cf</th><th>Cn</th><th>Cf</th></tr><tr><td rowspan="5">ok</td><td>0</td><td>T</td><td>Off</td><td>T</td><td>Off</td></tr><tr><td>1</td><td>T</td><td>T</td><td>T</td><td>T</td></tr><tr><td>2</td><td>T</td><td>T</td><td>T</td><td>T</td></tr><tr><td>3</td><td>T</td><td>DCd</td><td>T</td><td>DCn</td></tr><tr><td>4</td><td>T</td><td>DCd</td><td>T</td><td>DCn</td></tr><tr><td rowspan="5">no</td><td>0</td><td>On</td><td>Off</td><td>On</td><td>Off</td></tr><tr><td>1</td><td>On</td><td>On</td><td>On</td><td>On</td></tr><tr><td>2</td><td>DCd</td><td>DCd</td><td>DCn</td><td>DCn</td></tr><tr><td>3</td><td>On</td><td>DCd</td><td>On</td><td>DCn</td></tr><tr><td>4</td><td>On</td><td>DCd</td><td>On</td><td>DCn</td></tr><tr><td rowspan="5">ko</td><td>0</td><td>DCd</td><td>Off</td><td>DCn</td><td>Off</td></tr><tr><td>1</td><td>On</td><td>Off</td><td>On</td><td>Off</td></tr><tr><td>2</td><td>DCd</td><td>DCd</td><td>DCn</td><td>DCn</td></tr><tr><td>3</td><td>DCd</td><td>DCd</td><td>DCn</td><td>DCn</td></tr><tr><td>4</td><td>DCd</td><td>DCd</td><td>DCn</td><td>DCn</td></tr></table>Headings legend:
FP1 = status of probe selected with FP1
day = day mode
night = night mode
Cn = compressor on
Cf = compressor off.
Status legend:
ok = probe present
no = probe not present
ko = probe present but in error
T = thermostat controlled fans
On = fans on
Off = fans off
DCd = day duty cycle
DCn = night duty cycle.</td><td>0...4</td><td>num</td><td>2</td><td>2</td><td>2</td><td>2</td><td>2</td><td>2</td><td>2</td><td>2</td><td>2</td></tr>
<tr><td>FOn</td><td>Fan on time for day duty cycle. Applies when Duty cycle mode is active (see FCO).</td><td>0...250</td><td>min</td><td>1</td><td>1</td><td>1</td><td>1</td><td>1</td><td>1</td><td>1</td><td>1</td><td>1</td></tr>
<tr><td>FOF</td><td>Fan off time for day duty cycle. Applies when Duty cycle mode is active (see FCO).</td><td>0...250</td><td>min</td><td>0</td><td>0</td><td>0</td><td>0</td><td>0</td><td>0</td><td>0</td><td>0</td><td>0</td></tr>
<tr><td>Fnn</td><td>Fan on time for night duty cycle. Applies when Duty cycle mode is active (see FCO).</td><td>0...250</td><td>min</td><td>0</td><td>0</td><td>0</td><td>0</td><td>0</td><td>0</td><td>0</td><td>0</td><td>0</td></tr>
<tr><td>FnF</td><td>Fan off time for night duty cycle. Applies when Duty cycle mode is active (see FCO).</td><td>0...250</td><td>min</td><td>0</td><td>0</td><td>0</td><td>0</td><td>0</td><td>0</td><td>0</td><td>0</td><td>0</td></tr>
<tr><td>FES</td><td>“Modulated fans” regulator inhibiting temperature.</td><td>-58.0...302</td><td>°C/°F</td><td>0.0</td><td>0.0</td><td>0.0</td><td>0.0</td><td>0.0</td><td>0.0</td><td>0.0</td><td>0.0</td><td>0.0</td></tr>
<tr><td>FEd</td><td>Tripping differential for “modulated fans” regulator (absolute or relative).</td><td>0.1...50.0</td><td>°C/°F</td><td>0.1</td><td>0.1</td><td>0.1</td><td>0.1</td><td>0.1</td><td>0.1</td><td>0.1</td><td>0.1</td><td>0.1</td></tr>
<tr><td>FEu</td><td>Threshold value (Cut-OFF) on “modulated fans” regulator.</td><td>0.0...25.0</td><td>°C/°F</td><td>2.0</td><td>2.0</td><td>2.0</td><td>2.0</td><td>2.0</td><td>2.0</td><td>2.0</td><td>2.0</td><td>2.0</td></tr>
<tr><td>FEC</td><td>Activation differential for the threshold value (Cut-OFF) on “modulated fans” regulator.</td><td>0.1...25.0</td><td>°C/°F</td><td>5.0</td><td>5.0</td><td>5.0</td><td>5.0</td><td>5.0</td><td>5.0</td><td>5.0</td><td>5.0</td><td>5.0</td></tr>
</table>

PAR	Description	Range	UM	Value	AP1	AP2	AP3	AP4	AP5	AP6	AP7	AP8
rA1	Sets probe 1 used for temperature alarms. • **diS** (0) = disabled • **Pb1** (1) = probe Pb1 • **Pb2** (2) = probe Pb2 • **Pb3** (3) = probe Pb3 • **Pb4** (4) = probe Pb4 • **Pb5** (5) = probe Pb5 • **Pbi** (6) = virtual probe • **PFi** (7) = filtered virtual probe	diS, Pb1...Pb5, Pbi, PFi	num	Pb1	Pb1	Pb1	Pb1	Pb1	Pb1	Pb1	Pb1	Pb1
Att	Sets the absolute or relative value for parameters **HA1/HA2** and **LA1/LA2**. • **AbS** (0) = absolute value • **rEL** (1) = relative value	AbS/rEL	flag	rEL	rEL	rEL	rEL	rEL	rEL	rEL	rEL	rEL
AFd	Alarm activation differential.	0.1...25.0	°C/°F	2.0	2.0	2.0	2.0	2.0	2.0	2.0	2.0	2.0
HA1	Probe 1 maximum alarm (only if **rA1**≠ dis). Temperature value (**Att** function) which, when exceeded, will lead to the activation of alarm signaling.	LA1...302	°C/°F	10.0	10.0	10.0	10.0	10.0	10.0	10.0	10.0	10.0
LA1	Probe 1 minimum alarm (only if **rA1**≠diS). Temperature value (**Att** function) which, when exceeded, will lead to the activation of alarm signaling.	-58.0...HA1	°C/°F	-10.0	-10.0	-10.0	-10.0	-10.0	-10.0	-10.0	-10.0	-10.0
PAO	Alarm exclusion time when switching on the device, after a power outage. Refers only to high and low temperature alarms.	0...10	hours	3	3	3	3	3	3	3	3	3
dAO	Temperature alarm exclusion time after defrosting.	0...250	min	30	30	30	30	30	30	30	30	30
tA1	Temperature alarm 1 signaling delay (only if **rA1**≠diS). Refers only to high and low temperature alarms **LA1** and **HA1**.	0...250	min	30	30	30	30	30	30	30	30	30
dAt	Defrost ended due to timeout alarm indication. • **no**(0) = alarm not activated • **yES**(1) = alarm activated	no/yES	flag	no	no	no	no	no	no	no	no	no
ALL	Low alarm threshold (warning).	0.0...ALH	num	30.0	30.0	30.0	30.0	30.0	30.0	30.0	30.0	30.0
ALH	High alarm threshold (alarm).	ALL...100	num	50.0	50.0	50.0	50.0	50.0	50.0	50.0	50.0	50.0
L00	Probe shared via Link2: • **diS** (0) = disabled • **Pb1** (1) = probe Pb1 • **Pb2** (2) = probe Pb2 • **Pb3** (3) = probe Pb3 • **Pb4** (4) = probe Pb4 • **Pb5** (5) = probe Pb5 • **Pbi** (6) = virtual probe • **PFi** (7) = filtered virtual probe	diS, Pb1...Pb5, Pbi, PFi	num	diS	diS	diS	diS	diS	diS	diS	diS	diS
L01	Shares the displayed value with the Link2 network. • **0** = prevents sending the displayed value from the device to the Link2 network • **1** = enables sending the displayed value from the device to the Link2 network • **2** = displays the value of the device with setting **L01** = 1.	0/1/2	num	0	0	0	0	0	0	0	0	0
L02	Sends the Setpoint value to the Link2 network when it is changed. • **no** (0) = no • **yES** (1) = yes.	no/yES	flag	no	no	no	no	no	no	no	no	no

PAR	Description	Range	UM	Value	AP1	AP2	AP3	AP4	AP5	AP6	AP7	AP8
L03	Enables the sending of the defrost request to the Link2 network. • **0** = send defrost request disabled • **1** = primary device for sending simultaneous defrost request • **2** = primary device for sending sequential defrost request	0/1/2	num	0	0	0	0	0	0	0	0	0
L04	Defrost end method. • **ind** (0) = independent • **dEP** (1) = dependent. Waits for all controllers to have finished defrosting.	ind/dEP	flag	ind	ind	ind	ind	ind	ind	ind	ind	ind
L05	Enables Stand-by command synchronization • **no** (0) = no • **yES** (1) = yes	no/yES	flag	no	no	no	no	no	no	no	no	no
L06	Enables light command synchronization • **no** (0) = no • **yES** (1) = yes	no/yES	flag	no	no	no	no	no	no	no	no	no
L07	Enables Energy Saving command synchronization • **no** (0) = no • **yES** (1) = yes	no/yES	flag	no	no	no	no	no	no	no	no	no
L08	Enables AUX command synchronization • **no** (0) = no • **yES** (1) = yes	no/yES	flag	no	no	no	no	no	no	no	no	no
L09	Enables sharing of the saturation probe (pressure). • **no** (0) = no • **yES** (1) = yes	no/yES	flag	no	no	no	no	no	no	no	no	no
L10	Dependent defrost end timeout.	0...250	min	30	30	30	30	30	30	30	30	30
L11	Number of devices connected to Link2. If the number of devices differs from the set value, a Link2 alarm will be activated (**ELi**).	0...8	num	0	0	0	0	0	0	0	0	0
L12	Alarm relay sharing method via Link2: • **0** = function disabled • **1** = primary alarm relay (The relay is activated from local alarm relay or secondary alarm relay) • **2** = secondary alarm relay	0/1/2	num	0	0	0	0	0	0	0	0	0
L15	Share buzzer and alarm silenced command via Link2 • **0** = function disabled • **1** = main board • **2** = remote board (shares buzzer and alarm silenced command with main board)	0/1/2	flag	0	0	0	0	0	0	0	0	0

PAR	Description	Range	UM	Value	AP1	AP2	AP3	AP4	AP5	AP6	AP7	AP8
ESt	Type of event activated via RTC. • **0** = disabled • **1** = Energy Saving • **2** = Energy Saving + Light off • **3** = Energy Saving + Light off + AUX output active • **4** = Device off • **5** = Energy saving + Terminal buzzer silencing • **6** = Energy saving + Light off + Terminal buzzer silencing • **7** = Energy Saving + Light off + AUX output active + Terminal buzzer silencing • **8** = Device off + Terminal buzzer silencing	0...8	num	0	0	0	0	0	0	0	0	0
ESF	Activates night mode (energy saving) for the fans. • **no** (0) = disabled • **yES** (1) = enabled if energy saving mode is active (only if **ESt**≠0 and **ESt**≠4).	no/yES	flag	0	0	0	0	0	0	0	0	0
OS1	Offset on setpoint 1 (SP1) in energy saving mode.	-50.0...50.0	°C/°F	3.0	3.0	3.0	3.0	3.0	3.0	3.0	3.0	3.0
dn1	Differential on setpoint 1 (SP1) in energy saving mode.	-58.0...302	°C/°F	4.0	4.0	4.0	4.0	4.0	4.0	4.0	4.0	4.0
EdH	Weekday Energy Saving start hour. • **0...23** = start hour • **24** = disabled	0...24	hours	24	24	24	24	24	24	24	24	24
Edn	Weekday Energy Saving start minutes.	0...59	min	0	0	0	0	0	0	0	0	0
Edd	Weekday Energy Saving duration.	1...72	hours	10	10	10	10	10	10	10	10	10
EFH	Weekend/holiday Energy Saving start hour. • **0...23** = start hour • **24** = disabled	0...24	hours	24	24	24	24	24	24	24	24	24
EFn	Weekend/holiday Energy Saving start minutes.	0...59	min	0	0	0	0	0	0	0	0	0
EFd	Weekend/holiday Energy Saving duration.	1...72	hours	24	24	24	24	24	24	24	24	24
FH	Anti-sweater heaters probe (FH). • **diS** (0) = disabled • **dc** (1) = duty cycle • **Pb1** (2) = probe Pb1 • **Pb2** (3) = probe Pb2 • **Pb3** (4) = probe Pb3 • **Pb4** (5) = probe Pb4 • **Pb5** (6) = probe Pb5 • **Pbi** (7) = virtual probe • **PFi** (8) = filtered virtual probe • **PbC** (9) = probe Pb8 KDX terminal	diS, dc, Pb1...Pb5, Pbi, PFi, PbC	num	diS	diS	diS	diS	diS	diS	diS	diS	diS
FHt	Anti-sweater heaters operating period duration (FH), only used if the OC output is used with SSR relay.	1...250	s*10	30	30	30	30	30	30	30	30	30
FH0	Setpoint corresponding to the anti-sweater heaters (only if **FH**≠dis and **FH**≠dc).	-58.0...302	°C/°F	0.0	0.0	0.0	0.0	0.0	0.0	0.0	0.0	0.0
FH1	Offset corresponding to the anti-sweater heaters (only if **FH**≠dis and **FH**≠dc).	0.0...25.0	°C/°F	0.0	0.0	0.0	0.0	0.0	0.0	0.0	0.0	0.0
FH2	Band corresponding to the anti-sweater heaters (only if **FH**≠dis and **FH**≠dc).	-58.0...302	°C/°F	0.0	0.0	0.0	0.0	0.0	0.0	0.0	0.0	0.0
FH3	Minimum percentage for the anti-sweater heaters (only if **FH**≠dis and **FH**≠dc).	0...100	%	0	0	0	0	0	0	0	0	0

PAR	Description	Range	UM	Value	AP1	AP2	AP3	AP4	AP5	AP6	AP7	AP8
FH4	Maximum percentage for the day Duty cycle.	0...100	%	75	75	75	75	75	75	75	75	75
FH5	Maximum percentage for the night Duty cycle.	0...100	%	50	50	50	50	50	50	50	50	50
FH6	Anti-sweater heaters percentage during defrost.	0...100	%	100	100	100	100	100	100	100	100	100
Adr	Modbus protocol controller address.	1...250	flag	1 (not in applications)								
Pty	Modbus parity bit. • **n**(0) = none • **E**(1) = even • **o**(2) = odd.	n/E/o	num	E (not in applications)								
LOC	LOCk. Setpoint change lock. It is still possible to enter parameter programming and change them, including the status of this parameter in order to unlock the terminal. • **no** (0) = no • **yES** (1) = yes	no/yES	flag	no	no	no	no	no	no	no	no	no
ndt	Display with decimal point. • **no** (0) = no (integers only) • **yES** (1) = yes (display with decimal).	no/yES	flag	yES	yES	yES	yES	yES	yES	yES	yES	yES
CA1	Calibration of probe Pb1 (only if **H41**≠Pro). Positive or negative temperature values that are added to those read by Pb1. This sum is used for the displayed temperature as well as for the regulation.	-30.0...30.0	°C/°F	0.0	0.0	0.0	0.0	0.0	0.0	0.0	0.0	0.0
CA2	Calibration of probe Pb2 (only if **H42**≠Pro). Positive or negative temperature values that are added to those read by Pb2. This sum is used for the displayed temperature as well as for the regulation.	-30.0...30.0	°C/°F	0.0	0.0	0.0	0.0	0.0	0.0	0.0	0.0	0.0
CA3	Calibration of probe Pb3 (only if **H43**≠Pro). Positive or negative temperature values that are added to those read by Pb3. This sum is used for the displayed temperature as well as for the regulation.	-30.0...30.0	°C/°F	0.0	0.0	0.0	0.0	0.0	0.0	0.0	0.0	0.0
CA4	Calibration of probe Pb4 (only if **H44**≠Pro). Positive or negative temperature values that are added to those read by Pb4. This sum is used for the displayed temperature as well as for the regulation.	-30.0...30.0	°C/°F	0.0	0.0	0.0	0.0	0.0	0.0	0.0	0.0	0.0
CA5	Calibration of probe Pb5 (only if **H45**≠Pro). Positive or negative temperature values that are added to those read by Pb5. This sum is used for the displayed temperature as well as for the regulation.	-30.0...30.0	°C/°F	0.0	0.0	0.0	0.0	0.0	0.0	0.0	0.0	0.0
CA6	Calibration of pressure transducer Pb6 (4...20 mA) (only if **H46**=Pro). Positive or negative temperature values that are added to those read by pressure transducer Pb6 (4...20 mA). This sum is used for the displayed temperature as well as for the regulation.	-30.0...30.0	bar/psi	0.0	0.0	0.0	0.0	0.0	0.0	0.0	0.0	0.0
CA7	Calibration of ratiometric transducer Pb7 (only if **H47**=Pro). Positive or negative temperature values that are added to those read by ratiometric transducer Pb7. This sum is used for the displayed temperature as well as for the regulation.	-30.0...30.0	bar/psi	0.0	0.0	0.0	0.0	0.0	0.0	0.0	0.0	0.0
LdL	Minimum value that can be displayed by the device.	-58.0...HdL	°C/°F	-40.0	-40.0	-40.0	-40.0	-40.0	-40.0	-40.0	-40.0	-40.0

PAR	Description	Range	UM	Value	AP1	AP2	AP3	AP4	AP5	AP6	AP7	AP8
HdL	Maximum value that can be displayed by the device.	LdL...302	°C/°F	100	100	100	100	100	100	100	100	100
ddL	Display mode during defrosting. • **0** = display the temperature read by the probe or the setpoint (see **ddd**) • **1** = locks the reading at the temperature value read by the probe at the start of defrost until reaching SEt (or until the expiration of **Ldd**) • **2** = displays label dEF during defrost until reaching SEt (or until the expiration of **Ldd**).	0/1/2	num	0	0	0	0	0	0	0	0	0
Ldd	Display unlocking timeout value.	0...250	min	0	0	0	0	0	0	0	0	0
ddd	Sets the value to show on the display. • **SP1** (0) = setpoint SP1 • **Pb1** (1) = probe Pb1 • **Pb2** (2) = probe Pb2 • **Pb3** (3) = probe Pb3 • **Pb4** (4) = probe Pb4 • **Pb5** (5) = probe Pb5 • **Pbi** (6) = virtual probe • **LP** (7) = remote probe • **PFi** (8) = filtered virtual probe	SP1, Pb1...Pb5, Pbi, LP, PFi	num	Pb1	Pb1	Pb1	Pb1	Pb1	Pb1	Pb1	Pb1	Pb1
trA	Selects the model of ratiometric transducer used. • **USE** (0) = Generic Probe Set by customer • **rA1** (1) = EWPA 010 R 0/5 V 0/10 BAR FEMALE • **rA2** (2) = EWPA 030 R 0/5 V 0/30 BAR FEMALE • **rA3** (3) = EWPA 050 R 0/5 V 0/50 BAR FEMALE • **rA4** (4) = AKS 32R -1 ...6 BAR • **rA5** (5) = AKS 32R -1 ...12 BAR • **rA6** (6) = AKS 32R -1 ... 20 BAR • **rA7** (7) = AKS 32R -1 ... 34 BAR • **rA8** (8) = Reserved. **Note**: The upper and lower limits of probes rA1... rA8 are pre-set (and cannot be changed), while if you select USE you will need to set them via parameters **H05** and **H06**.	USE, rA1...rA8	num	USE (not in applications)								
H00	Select probe type used (Pb1...Pb5). • **ntc** (0) = NTC • **Ptc** (1) = PTC • **Pt1** (2) = Pt1000	ntc, PTC, Pt1	num	ntc	ntc	ntc	ntc	ntc	ntc	ntc	ntc	ntc
H08	Stand-by operating mode • **0** = display off; the regulators are active and the device signals possible alarms by reactivating the display • **1** = display off; the regulators and the alarms are blocked • **2** = the display shows the label “OFF”; the regulators and alarms are inhibited.	0/1/2	num	2	2	2	2	2	2	2	2	2
H16	Configuration of digital input 6/polarity (Pb6) (only if **H46**=di). Same as **H11**.	-19...+19	num	0	0	0	0	0	0	0	0	0
H18	Digital input 8/polarity (DI) configuration. Same as **H11**.	-19...+19	num	0	0	0	0	-8	-8	-8	0	0
d16	Digital input 6 activation delay (Pb6) (only if **H46**=di).	0...255	min	0	0	0	0	0	0	0	0	0
d18	Digital input 8 (DI) activation delay.	0...255	min	0	0	0	0	0	0	0	0	0

PAR	Description	Range	UM	Value	AP1	AP2	AP3	AP4	AP5	AP6	AP7	AP8
H24	Digital output 4 configuration (**OUT4**). Same as **H21**.	0...19	num	7	7	7	7	7	7	7	7	7
H27	Configuration of digital output 7 (**Open Collector**). Same as **H21**.	0...19	num	0	0	0	0	0	0	0	0	0
H33	Configuration of the ESC key. Same as **H31**.	0...9	num	6	6	6	6	6	6	6	6	6
H60	Display selected application. • **0** = disabled • **1** = AP1 • **2** = AP2 • **3** = AP3 • **4** = AP4 • **5** = AP5 • **6** = AP6 • **7** = AP7 • **8** = AP8	0...8	num	1 (not in applications)								
rSP	Saturation probe. • **diS** (0) = disabled • **Pb6** (1) = pressure transducer 4...20 mA • **Pb7** (2) = ratiometric transducer • **LSP** (3) = remote probe (shared within the Link2 network) • **rP** (4) = remote probe (from supervisor).	diS, Pb6, Pb7, LSP, rP	num	Pb6 (not in applications)								
rSS	Superheat probe. • **diS** (0) = disabled • **Pb1** (1) = probe Pb1 • **Pb2** (2) = probe Pb2 • **Pb3** (3) = probe Pb3 • **Pb4** (4) = probe Pb4 • **Pb5** (5) = probe Pb5	diS, Pb1...Pb5	num	Pb5 (not in applications)								
EPd	Saturation value display mode. • **t** (0) = temperature • **P** (1) = pressure	t/P	flag	t (not in applications)								
Ert	Type of refrigerant. • **404** (0) = R404A • **r22** (1) = R22 • **410** (2) = R410A • **134** (3) = R134a • **744**(4) = R744 (CO2) • **507** (5) = R507A • **717** (6) = R717 (NH3) • **290** (7) = reserved • **407** (8) = R407A • **448** (9) = R448A • **449** (10) = R449A • **450** (11) = R450 • **513** (12) = R513A • **PAr_1** (13) = customizable 1 • **PAr_2** (14) = customizable 2 • **PAr_3** (15) = customizable 3 • **PAr_4** (16) = customizable 4 • **PAr_5** (17) = customizable 5 • **PAr_6** (18) = customizable 6 • **455** (19) = reserved **Note**: Contact Eliwell representative for customizable refrigerants.	404, r22, 410 134, 744, 507, 717, 290, 407, 448, 449 450, 513, PAr_ 1...PAr_6, 455	num	410 (not in applications)								
U06	Minimum useful valve opening percentage.	0...100	%	10 (not in applications)								
OLt	Minimum superheat threshold.	0.0...999.9	°C/°F	5.0 (not in applications)								
(*) Parameters visible at level 2 only if **E00** = 0 (custom valve).												

Note: the controller must be rebooted after changing **CnF** folder parameters.

Installer parameters RTX 600 /V

PAR	Description	Range	UM	Value	AP1	AP2	AP3	AP4	AP5	AP6	AP7	AP8
CP (Compressor)												
rE	Sets the temperature control type to perform. • **0**: single thermostat • **1**: dual thermostat in series • **2**: dual thermostat in parallel • **3**: reserved • **4**: two independent regulators • **5**: continuous modulation, single thermostat • **6**: continuous modulation, dual thermostat in series.	0...6	num	0	0	0	0	0	0	0	0	0
rP1	Sets the probe used by thermostat 1. • **diS** (0) = disabled • **Pb1** (1) = probe Pb1 • **Pb2** (2) = probe Pb2 • **Pb3** (3) = probe Pb3 • **Pb4** (4) = probe Pb4 • **Pb5** (5) = probe Pb5 • **Pbi** (6) = virtual probe • **LP** (7) = remote probe • **PFi** (8) = filtered virtual probe	diS, Pb1...Pb5, Pbi, LP, PFi	num	Pb1	Pb1	Pb1	Pb1	Pb1	Pb1	Pb1	Pb1	Pb1
rP2	Sets the probe used by thermostat 2 (only if **rE**≠0). • **diS** (0) = disabled • **Pb1** (1) = probe Pb1 • **Pb2** (2) = probe Pb2 • **Pb3** (3) = probe Pb3 • **Pb4** (4) = probe Pb4 • **Pb5** (5) = probe Pb5 • **Pbi** (6) = virtual probe • **LP** (7) = remote probe • **PFi** (8) = filtered virtual probe • **PbC** (9) =probe Pb8 KDX terminal	diS, Pb1...Pb5, Pbi, LP, PFi, PbC	num	diS	diS	diS	diS	diS	diS	diS	diS	Pb2
SP1	Thermostat 1 regulation setpoint.	LS1...HS1	°C/°F	0.0	0.0	3.0	-18.0	0.0	3.0	-18.0	-18.0	-18.0
dF1	Tripping differential for thermostat 1 (absolute or relative). **Note**: always a value other than 0.	-58.0...302	°C/°F	2.0	2.0	2.0	2.0	2.0	2.0	2.0	2.0	2.0
SP2	Thermostat 2 regulation setpoint (only if **rE**≠0).	LS2...HS2	°C/°F	0.0	0.0	0.0	0.0	0.0	0.0	0.0	0.0	-18.0
dF2	Tripping differential for thermostat 2 (absolute or relative) (only if **rE**≠0). **Note**: always a value other than 0.	-58.0...302	°C/°F	0.0	0.0	0.0	0.0	0.0	0.0	0.0	0.0	0.0
Stt	Management mode for differentials **dF1** and **dF2**. • **AbS** (0) = absolute value • **rEL** (1) = relative value	AbS/rEL	flag	rEL	rEL	rEL	rEL	rEL	rEL	rEL	rEL	rEL
HS1	Maximum value that can be attributed to setpoint SP1. **Note**: The two sets are interdependent: HS1 cannot be less than LS1 and vice versa.	LS1...HdL	°C/°F	20.0	20.0	20.0	20.0	20.0	20.0	20.0	20.0	20.0
LS1	Minimum value that can be attributed to setpoint SP1. **Note**: The two sets are interdependent: LS1 cannot be greater than HS1 and vice versa.	LdL...HS1	°C/°F	-35.0	-35.0	-35.0	-35.0	-35.0	-35.0	-35.0	-35.0	-35.0

PAR	Description	Range	UM	Value	AP1	AP2	AP3	AP4	AP5	AP6	AP7	AP8
HS2	Maximum value that can be attributed to setpoint SP2 (only if **rE**≠0). **Note**: The two sets are interdependent: HS2 cannot be less than LS2 and vice versa.	LS2...HdL	°C/°F	0.0	0.0	0.0	0.0	0.0	0.0	0.0	0.0	0.0
LS2	Minimum value that can be attributed to setpoint SP2 (only if **rE**≠0). **Note**: The two sets are interdependent: LS2 cannot be greater than HS2 and vice versa.	LdL...HS2	°C/°F	0.0	0.0	0.0	0.0	0.0	0.0	0.0	0.0	0.0
HC1	Selects thermostat 1 regulation mode. • **C**(0) = Cool • **H**(1) = Heat	C/H	flag	C	C	C	C	C	C	C	C	C
HC2	Selects thermostat 2 regulation mode (only if **rE**≠0). Same as **HC1**.	C/H	flag	C	C	C	C	C	C	C	C	C
Cit	Minimum compressor activation time. If **Cit** = 0 it is not active.	0...250	min	0	0	0	0	0	0	0	0	0
CAt	Maximum compressor activation time. If **CAt** = 0 it is not active.	0...250	min	0	0	0	0	0	0	0	0	0
Ont	Regulator switch-on time for faulty probe: • if **Ont** = 1 and **OFt** = 0 compressor always on • if **Ont** = 1 and **OFt** > 0 compressor in duty cycle	0...250	min	3	3	3	3	3	3	3	3	3
OFt	Regulator switch-off time for faulty probe: • if **OFt** = 1 and **Ont** = 0 compressor always off • if **OFt** = 1 and **Ont** > 0 compressor in duty cycle	0...250	min	3	3	3	3	3	3	3	3	3
dOn	Compressor output activation delay time from call.	0...250	s	0	0	0	0	0	0	0	0	0
dOF	Compressor output activation delay time from the previous switch-off.	0...250	min	0	0	0	0	0	0	0	0	0
dbi	Delay time between two consecutive compressor switch-ons.	0...250	min	0	0	0	0	0	0	0	0	0
OdO	Output activation delay time from switching on the device or after a power outage. **0** = not active.	0...250	min	0	0	0	0	0	0	0	0	0
CFP	Condenser fan pre-ventilation time in Heat/Cool.	0...255	s	0	0	0	0	0	0	0	0	0
CFd	Condenser fan operating mode during a defrost. • **OFF** (0) = fans off • **On** (1) = fans on	OFF/On	flag	OFF	OFF	OFF	OFF	OFF	OFF	OFF	OFF	OFF
OF1	Represents the value (Offset) which will be added to or subtracted from SP1 in the presence of remote commands. • **nOS**= Activate setpoint offset forcing (SEt = SP1+OF1) • **oOS**= Deactivate setpoint offset forcing (SEt = SP1).	-50.0...50.0	°C/°F	0.0	0.0	0.0	0.0	0.0	0.0	0.0	0.0	0.0
POt	Pump down time. Sets the running time after evaporator valve closure.	0...250	s	0	0	0	0	0	0	0	0	0
SS1	Compressor soft start: advance hot gas valve opening. Sets the delay time between hot gas valve opening and compressor startup.	0...250	s	0	0	0	0	0	0	0	0	0

PAR	Description	Range	UM	Value	AP1	AP2	AP3	AP4	AP5	AP6	AP7	AP8
SS2	Compressor soft start: hot gas valve closure delay. Sets the delay time between compressor startup and hot gas valve closure.	0...250	s	0	0	0	0	0	0	0	0	0
dEF (Defrost)												
dP1	Sets the probe used by defrost 1 (only if **rE**≠0). • **diS** (0) = disabled • **Pb1** (1) = probe Pb1 • **Pb2** (2) = probe Pb2 • **Pb3** (3) = probe Pb3 • **Pb4** (4) = probe Pb4 • **Pb5** (5) = probe Pb5 • **Pbi** (6) = virtual probe • **LP** (7) = remote probe • **PFi** (8) = filtered virtual probe	diS, Pb1...Pb5, Pbi, LP, PFi	num	Pb2	Pb2	Pb2	Pb2	Pb2	Pb2	Pb2	Pb2	Pb3
dP2	Sets the probe used by defrost 2. Same as **dP1**.	diS, Pb1...Pb5, Pbi, LP, PFi	num	diS	diS	diS	diS	diS	diS	diS	diS	diS
dty	Type of defrost. • **0** = electric heater defrost • **1** = cycle inversion defrost • **2** = hot gas defrost for plug-in systems (with built-in compressor) • **3** = hot gas defrost for systems with remote group • **4** = modulated electric heater defrost (Smart Defrost).	0...4	num	0	0	0	0	0	0	0	0	0
dFt	Defrost activation mode using two probes. • **0** = activation only linked to probe 1 • **1** = activation on a call from at least one of the two probes • **2** = activation on a call from both probes	0/1/2	num	0	0	0	0	0	0	0	0	0
dit	Time interval between the start of two subsequent defrost operations. **0** = function disabled (defrost NEVER takes place).	0...250	hours	24	24	24	24	24	24	24	24	24
dt1	Unit of measure for defrost interval (**dit**). • **0** = hours • **1** = minutes • **2** = seconds	0/1/2	num	0	0	0	0	0	0	0	0	0
dt2	Unit of measure for defrost duration (**dE1**/**dE2**) (only if **dFt**≠0). • **0** = hours • **1** = minutes • **2** = seconds	0/1/2	num	1	1	1	1	1	1	1	1	1

PAR	Description	Range	UM	Value	AP1	AP2	AP3	AP4	AP5	AP6	AP7	AP8
dCt	Selects defrost interval count mode. • **0** = defrost disabled • **1** = hours of compressor operation (DIGIFROST® method); defrosting active ONLY with compressor on **Note**: the compressor run time is calculated independently of the evaporator probe (the calculation is active even if the evaporator probe is absent or not working). • **2** = hours of device operation; counting is always active when the machine is on and starts at every power-on • **3** = compressor stop. Each time the compressor stops, a defrosting cycle is performed in accordance with dty • **4** = RTC • **5** = temperature.	0...5	num	4	4	4	4	4	4	4	4	4
dOH	Defrost cycle activation delay from the call	0...250	min	0	0	0	0	0	0	0	0	0
dE1	Defrost 1 timeout. Sets the maximum duration of defrost 1.	1...250	min	30	30	30	30	30	30	30	30	30
dE2	Defrost 2 timeout (only if **dFt**≠0). Sets the maximum duration of defrost 2.	1...250	min	30	30	30	30	30	30	30	30	30
dS1	Defrost 1 end temperature (only if **dP1**≠diS)	-58.0...302	°C/°F	7.0	7.0	7.0	7.0	7.0	7.0	7.0	7.0	7.0
dS2	Defrost 2 end temperature (only if **dP2**≠diS)	-58.0...302	°C/°F	7.0	7.0	7.0	7.0	7.0	7.0	7.0	7.0	7.0
dSS	Defrost start temperature threshold (only if **dCt**=5).	-58.0...302	°C/°F	-5.0	-5.0	-5.0	-5.0	-5.0	-5.0	-5.0	-5.0	-5.0
dPO	Determines whether, upon switching on, the device activates defrosting (providing that the temperature measured on the evaporator permits it). • **no** (0) = no, do not defrost at switch-on • **yES** (1) = yes, defrost at switch-on.	no/yES	flag	no	no	no	no	no	no	no	no	no
tCd	Minimum period of time with the compressor ON or OFF before defrost is activated.	-60...60	min	0	0	0	0	0	0	0	0	0
ndE	Minimum defrost duration. **Note**: if **dty**=0, **dty**=1 or **dty**=4, set **ndE**=0.	0...250	min	0	0	0	0	0	0	0	0	0
PdC	Hot gas extraction time at the end of the defrost.	0...250	min	0	0	0	0	0	0	0	0	0
tPd	Minimum pump down time before defrost is activated	0...255	min	0	0	0	0	0	0	0	0	0
dPH	Regular defrost start hour (only if **dCt**=4). • **0...23** = start hour • **24** = disabled.	0...24	hours	24	24	24	24	24	24	24	24	24
dPn	Regular defrost start minutes (only if **dCt**=4).	0...59	min	0	0	0	0	0	0	0	0	0
dPd	Interval between one regular defrost and the next (only if **dCt**=4).	1...7	days	1	1	1	1	1	1	1	1	1
Fd1	1st weekend/holiday day (only if **dCt**=4). • **0...6** = start day • **7** = disabled.	0...7	days	7	7	7	7	7	7	7	7	7

PAR	Description	Range	UM	Value	AP1	AP2	AP3	AP4	AP5	AP6	AP7	AP8
Fd2	2nd weekend/holiday day (only if **dCt**=4). • **0...6** = start day • **7** = disabled.	0...7	days	7	7	7	7	7	7	7	7	7
Edt	Sets whether you want to enter a duration and defrost end temperature for each event (only if **dCt**=4). • **no** (0) = values all the same • **yES** (1) = custom values for each event.	no/yES	flag	no	no	no	no	no	no	no	no	no
Fdn	Number of multiple defrosts during one weekday (only if **dCt**=4). **0** = disabled.	0...250	num	0	0	0	0	0	0	0	0	0
FFn	Number of multiple defrosts during one weekend/holiday day (only if **dCt**=4). **0** = disabled.	0...250	num	0	0	0	0	0	0	0	0	0
PrH	Basin heater pre-activation time before defrost begins.	0...255	min	0	0	0	0	0	0	0	0	0
d1H	1st weekday defrost start hour (only if **dCt**=4). • **0...23** = start hour • **24** = disabled	0...24	hours	0	0	0	0	0	0	0	0	0
d1n	1st weekday defrost start minutes (only if **dCt**=4).	0...59	min	0	0	0	0	0	0	0	0	0
d1t	1st weekday defrost duration (only if **dCt**=4).	0...250	min	0	0	0	0	0	0	0	0	0
d1S	1st weekday defrost end temperature (only if **dCt**=4).	-58.0...302	°C/°F	0.0	0.0	0.0	0.0	0.0	0.0	0.0	0.0	0.0
d2H	2nd weekday defrost start hour (only if **dCt**=4). • **d1H...23** = start hour • **24** = disabled	d1H...24	hours	6	6	6	6	6	6	6	6	6
d2n	2nd weekday defrost start minutes (only if **dCt**=4).	0...59	min	0	0	0	0	0	0	0	0	0
d2t	2nd weekday defrost duration (only if **dCt**=4).	0...250	min	0	0	0	0	0	0	0	0	0
d2S	2nd weekday defrost end temperature (only if **dCt**=4).	-58.0...302	°C/°F	0.0	0.0	0.0	0.0	0.0	0.0	0.0	0.0	0.0
d3H	3rd weekday defrost start hour (only if **dCt**=4). • **d2H...23** = start hour • **24** = disabled.	d2H...24	hours	12	12	12	12	12	12	12	12	12
d3n	3rd weekday defrost start minutes (only if **dCt**=4).	0...59	min	0	0	0	0	0	0	0	0	0
d3t	3rd weekday defrost duration (only if **dCt**=4).	0...250	min	0	0	0	0	0	0	0	0	0
d3S	3rd weekday defrost end temperature (only if **dCt**=4).	-58.0...302	°C/°F	0.0	0.0	0.0	0.0	0.0	0.0	0.0	0.0	0.0
d4H	4th weekday defrost start hour (only if **dCt**=4). • **d3H...23** = start hour • **24** = disabled.	d3H...24	hours	18	18	18	18	18	18	18	18	18
d4n	4th weekday defrost start minutes (only if **dCt**=4).	0...59	min	0	0	0	0	0	0	0	0	0
d4t	4th weekday defrost duration (only if **dCt**=4).	0...250	min	0	0	0	0	0	0	0	0	0
d4S	4th weekday defrost end temperature (only if **dCt**=4).	-58.0...302	°C/°F	0.0	0.0	0.0	0.0	0.0	0.0	0.0	0.0	0.0

PAR	Description	Range	UM	Value	AP1	AP2	AP3	AP4	AP5	AP6	AP7	AP8
d5H	5th weekday defrost start hour (only if **dCt**=4). • **d4H...23** = start hour • **24** = disabled	d4H...24	hours	24	24	24	24	24	24	24	24	24
d5n	5th weekday defrost start minutes (only if **dCt**=4).	0...59	min	0	0	0	0	0	0	0	0	0
d5t	5th weekday defrost duration (only if **dCt**=4).	0...250	min	0	0	0	0	0	0	0	0	0
d5S	5th weekday defrost end temperature (only if **dCt**=4).	-58.0...302	°C/°F	0.0	0.0	0.0	0.0	0.0	0.0	0.0	0.0	0.0
d6H	6th weekday defrost start hour (only if **dCt**=4). • **d5H...23** = start hour • **24** = disabled	d5H...24	hours	24	24	24	24	24	24	24	24	24
d6n	6th weekday defrost start minutes (only if **dCt**=4).	0...59	min	0	0	0	0	0	0	0	0	0
d6t	6th weekday defrost duration (only if **dCt**=4).	0...250	min	0	0	0	0	0	0	0	0	0
d6S	6th weekday defrost end temperature (only if **dCt**=4).	-58.0...302	°C/°F	0.0	0.0	0.0	0.0	0.0	0.0	0.0	0.0	0.0
F1H	1st weekend/holiday defrost start hour (only if **dCt**=4). • **0...23** = start hour • **24** = disabled	0...24	hours	0	0	0	0	0	0	0	0	0
F1n	1st weekend/holiday defrost start minutes (only if **dCt**=4).	0...59	min	0	0	0	0	0	0	0	0	0
F1t	1st weekend/holiday defrost duration (only if **dCt**=4).	0...250	min	0	0	0	0	0	0	0	0	0
F1S	1st weekend/holiday defrost end temperature (only if **dCt**=4).	-58.0...302	°C/°F	0.0	0.0	0.0	0.0	0.0	0.0	0.0	0.0	0.0
F2H	2nd weekend/holiday defrost start hour (only if **dCt**=4). • **F1H...23** = start hour • **24** = disabled	F1H...24	hours	6	6	6	6	6	6	6	6	6
F2n	2nd weekend/holiday defrost start minutes (only if **dCt**=4).	0...59	min	0	0	0	0	0	0	0	0	0
F2t	2nd weekend/holiday defrost duration (only if **dCt**=4).	0...250	min	0	0	0	0	0	0	0	0	0
F2S	2nd weekend/holiday defrost end temperature (only if **dCt**=4).	-58.0...302	°C/°F	0.0	0.0	0.0	0.0	0.0	0.0	0.0	0.0	0.0
F3H	3rd weekend/holiday defrost start hour (only if **dCt**=4). • **F2H...23** = start hour • **24** = disabled	F2H...24	hours	12	12	12	12	12	12	12	12	12
F3n	3rd weekend/holiday defrost start minutes (only if **dCt**=4).	0...59	min	0	0	0	0	0	0	0	0	0
F3t	3rd weekend/holiday defrost duration (only if **dCt**=4).	0...250	min	0	0	0	0	0	0	0	0	0
F3S	3rd weekend/holiday defrost end temperature (only if **dCt**=4).	-58.0...302	°C/°F	0.0	0.0	0.0	0.0	0.0	0.0	0.0	0.0	0.0
F4H	4th weekend/holiday defrost start hour (only if **dCt**=4). • **F3H...23** = start hour • **24** = disabled	F3H...24	hours	18	18	18	18	18	18	18	18	18
F4n	4th weekend/holiday defrost start minutes (only if **dCt**=4).	0...59	min	0	0	0	0	0	0	0	0	0
F4t	4th weekend/holiday defrost duration (only if **dCt**=4).	0...250	min	0	0	0	0	0	0	0	0	0
F4S	4th weekend/holiday defrost end temperature (only if **dCt**=4).	-58.0...302	°C/°F	0.0	0.0	0.0	0.0	0.0	0.0	0.0	0.0	0.0

PAR	Description	Range	UM	Value	AP1	AP2	AP3	AP4	AP5	AP6	AP7	AP8
F5H	5th weekend/holiday defrost start hour (only if **dCt**=4). • **F4H...23** = start hour • **24** = disabled	F4H...24	hours	24	24	24	24	24	24	24	24	24
F5n	5th weekend/holiday defrost start minutes (only if **dCt**=4).	0...59	min	0	0	0	0	0	0	0	0	0
F5t	5th weekend/holiday defrost duration (only if **dCt**=4).	0...250	min	0	0	0	0	0	0	0	0	0
F5S	5th weekend/holiday defrost end temperature (only if **dCt**=4).	-58.0...302	°C/°F	0.0	0.0	0.0	0.0	0.0	0.0	0.0	0.0	0.0
F6H	6th weekend/holiday defrost start hour (only if **dCt**=4). • **F5H...23** = start hour • **24** = disabled	F5H...24	hours	24	24	24	24	24	24	24	24	24
F6n	6th weekend/holiday defrost start minutes (only if **dCt**=4).	0...59	min	0	0	0	0	0	0	0	0	0
F6t	6th weekend/holiday defrost duration (only if **dCt**=4).	0...250	min	0	0	0	0	0	0	0	0	0
F6S	6th weekend/holiday defrost end temperature (only if **dCt**=4).	-58.0...302	°C/°F	0.0	0.0	0.0	0.0	0.0	0.0	0.0	0.0	0.0
FAn (Fan)												
FP1	Sets the probe used by the evaporator fans during normal operation. • **diS** (0) = disabled • **Pb1** (1) = probe Pb1 • **Pb2** (2) = probe Pb2 • **Pb3** (3) = probe Pb3 • **Pb4** (4) = probe Pb4 • **Pb5** (5) = probe Pb5 • **Pbi** (6) = virtual probe • **LP** (7) = remote probe • **PFi** (8) = filtered virtual probe.	diS, Pb1...Pb5, Pbi, LP, PFi	num	Pb2	Pb2	Pb2	Pb2	Pb2	Pb2	Pb2	Pb2	Pb3
FP2	Sets the probe used by the evaporator fans during defrost. Same as **FP1**.	diS, Pb1...Pb5, Pbi, LP, PFi	num	Pb2	Pb2	Pb2	Pb2	Pb2	Pb2	Pb2	Pb2	Pb2
FPt	Parameter **Fst** management mode. • **AbS** (0) = absolute value • **rEL** (1) = relative value	AbS/rEL	flag	AbS	AbS	AbS	AbS	AbS	AbS	AbS	AbS	AbS
FSt	Fan disabling temperature. If the value read is greater than **FSt**, the fans will be stopped. The value is positive or negative (only if **FP1**≠diS).	-58.0...302	°C/°F	5.0	5.0	5.0	5.0	5.0	5.0	5.0	5.0	5.0
FAd	Evaporator fan activation differential (only if **FP1**≠dis).	1.0...25.0	°C/°F	1.0	1.0	1.0	1.0	1.0	1.0	1.0	1.0	1.0
Fdt	Evaporator fan activation delay after a defrost.	0...250	min	0	0	0	0	0	0	0	0	0
dt	Dripping time.	0...250	min	0	0	0	0	0	0	0	0	0
dFd	Evaporator fan operating mode during a defrost. • **OFF**(0) = Fans off • **On**(1) = Fans on	OFF/On	flag	On	On	On	On	On	On	On	On	On

<table>
<tr><th>PAR</th><th>Description</th><th>Range</th><th>UM</th><th>Value</th><th>AP1</th><th>AP2</th><th>AP3</th><th>AP4</th><th>AP5</th><th>AP6</th><th>AP7</th><th>AP8</th></tr>
<tr><td>FCO</td><td>Evaporator fan operating mode.
<table>
<tr><th rowspan="2">FP1</th><th rowspan="2">FCo</th><th colspan="2">day</th><th colspan="2">night</th></tr>
<tr><th>Cn</th><th>Cf</th><th>Cn</th><th>Cf</th></tr>
<tr><td rowspan="5">ok</td><td>0</td><td>T</td><td>Off</td><td>T</td><td>Off</td></tr>
<tr><td>1</td><td>T</td><td>T</td><td>T</td><td>T</td></tr>
<tr><td>2</td><td>T</td><td>T</td><td>T</td><td>T</td></tr>
<tr><td>3</td><td>T</td><td>DCd</td><td>T</td><td>DCn</td></tr>
<tr><td>4</td><td>T</td><td>DCd</td><td>T</td><td>DCn</td></tr>
<tr><td rowspan="5">no</td><td>0</td><td>On</td><td>Off</td><td>On</td><td>Off</td></tr>
<tr><td>1</td><td>On</td><td>On</td><td>On</td><td>On</td></tr>
<tr><td>2</td><td>DCd</td><td>DCd</td><td>DCn</td><td>DCn</td></tr>
<tr><td>3</td><td>On</td><td>DCd</td><td>On</td><td>DCn</td></tr>
<tr><td>4</td><td>On</td><td>DCd</td><td>On</td><td>DCn</td></tr>
<tr><td rowspan="5">ko</td><td>0</td><td>DCd</td><td>Off</td><td>DCn</td><td>Off</td></tr>
<tr><td>1</td><td>On</td><td>Off</td><td>On</td><td>Off</td></tr>
<tr><td>2</td><td>DCd</td><td>DCd</td><td>DCn</td><td>DCn</td></tr>
<tr><td>3</td><td>DCd</td><td>DCd</td><td>DCn</td><td>DCn</td></tr>
<tr><td>4</td><td>DCd</td><td>DCd</td><td>DCn</td><td>DCn</td></tr>
</table>
Headings legend:
FP1 = status of probe selected with FP1
day = day mode
night = night mode
Cn = compressor on
Cf = compressor off.
Status legend:
ok = probe present
no = probe not present
ko = probe present but in error
T = thermostat controlled fans
On = fans on
Off = fans off
DCd = day duty cycle
DCn = night duty cycle.</td><td>0...4</td><td>num</td><td>2</td><td>2</td><td>2</td><td>2</td><td>2</td><td>2</td><td>2</td><td>2</td><td>2</td></tr>
<tr><td>FOd</td><td>Evaporator fan status with door open.
OFF(0) = Fans off
On(1) = Fans on</td><td>OFF/On</td><td>flag</td><td>OFF</td><td>OFF</td><td>OFF</td><td>OFF</td><td>OFF</td><td>OFF</td><td>OFF</td><td>OFF</td><td>OFF</td></tr>
<tr><td>FdC</td><td>Evaporator fan shutoff delay after compressor deactivation.</td><td>0...250</td><td>min</td><td>0</td><td>0</td><td>0</td><td>0</td><td>0</td><td>0</td><td>0</td><td>0</td><td>0</td></tr>
<tr><td>FOn</td><td>Fan on time for day duty cycle. Applies when Duty cycle mode is active (see FCO).</td><td>0...250</td><td>min</td><td>1</td><td>1</td><td>1</td><td>1</td><td>1</td><td>1</td><td>1</td><td>1</td><td>1</td></tr>
<tr><td>FOF</td><td>Fan off time for day duty cycle. Applies when Duty cycle mode is active (see FCO).</td><td>0...250</td><td>min</td><td>0</td><td>0</td><td>0</td><td>0</td><td>0</td><td>0</td><td>0</td><td>0</td><td>0</td></tr>
<tr><td>Fnn</td><td>Fan on time for night duty cycle. Applies when Duty cycle mode is active (see FCO).</td><td>0...250</td><td>min</td><td>0</td><td>0</td><td>0</td><td>0</td><td>0</td><td>0</td><td>0</td><td>0</td><td>0</td></tr>
<tr><td>FnF</td><td>Fan off time for night duty cycle. Applies when Duty cycle mode is active (see FCO).</td><td>0...250</td><td>min</td><td>0</td><td>0</td><td>0</td><td>0</td><td>0</td><td>0</td><td>0</td><td>0</td><td>0</td></tr>
<tr><td colspan="13">FE (Modulated Fans)</td></tr>
</table>

PAR	Description	Range	UM	Value	AP1	AP2	AP3	AP4	AP5	AP6	AP7	AP8
FE1	Sets the probe used by the modulated fans. • **diS** (0) = disabled • **Pb1** (1) = probe Pb1 • **Pb2** (2) = probe Pb2 • **Pb3** (3) = probe Pb3 • **Pb4** (4) = probe Pb4 • **Pb5** (5) = probe Pb5 • **Pb6** (6) = probe Pb6 • **Pb7** (7) = probe Pb7 • **LP** (8) = remote probe (Link2) • **rP** (9) = remote probe • **Pbi** (10) = virtual probe • **PFi** (11) = filtered virtual probe • **PbC** (12) = probe Pb8 KDX terminal	diS, Pb1...Pb7, LP, rP, Pbi, PFi, PbC	num	0	0	0	0	0	0	0	0	0
FEt	**FES** differential management mode. • **AbS** (0) = absolute value • **rEL** (1) = relative value	AbS/rEL	flag	AbS	AbS	AbS	AbS	AbS	AbS	AbS	AbS	AbS
FES	“Modulated fans” regulator inhibiting temperature.	-58.0...302	°C/°F	0.0	0.0	0.0	0.0	0.0	0.0	0.0	0.0	0.0
FEd	Tripping differential for “modulated fans” regulator (absolute or relative).	0.1...50.0	°C/°F	0.1	0.1	0.1	0.1	0.1	0.1	0.1	0.1	0.1
FEu	Threshold value (Cut-OFF) on “modulated fans” regulator.	0.0...25.0	°C/°F	2.0	2.0	2.0	2.0	2.0	2.0	2.0	2.0	2.0
FEC	Activation differential for the threshold value (Cut-OFF) on “modulated fans” regulator.	0.1...25.0	°C/°F	5.0	5.0	5.0	5.0	5.0	5.0	5.0	5.0	5.0
FEr	Fan deactivation delay time from compressor stoppage.	0...250	min	20	20	20	20	20	20	20	20	20
FE2	Minimum implementation percentage applied to the analog output in day mode.	0...100	%	0	0	0	0	0	0	0	0	0
FE3	Maximum implementation percentage applied to the analog output in day mode with the compressor running.	0...100	%	20	20	20	20	20	20	20	20	20
FE4	Maximum implementation percentage applied to the analog output in day mode with the compressor off.	0...100	%	100	100	100	100	100	100	100	100	100
FE5	Minimum implementation percentage applied to the analog output in night mode.	0...100	%	60	60	60	60	60	60	60	60	60
FE6	Maximum implementation percentage applied to the analog output in night mode with the compressor running.	0...100	%	20	20	20	20	20	20	20	20	20
FE7	Maximum implementation percentage applied to the analog output in night mode with the compressor off.	0...100	%	80	80	80	80	80	80	80	80	80
FE8	Implementation percentage applied to the analog output during defrosting.	0...100	%	60	60	60	60	60	60	60	60	60
FE9	Implementation percentage applied to the analog output in the event of a probe error.	0...100	%	0	0	0	0	0	0	0	0	0
FEA	Modulated fans pick-up percentage. Used to overcome thermal inertia of the fans in the event of extended usage at low speed.	0...100	%	60	60	60	60	60	60	60	60	60
FEb	Modulated fans pick-up time.	0...250	s	100	100	100	100	100	100	100	100	100
FEP	Fan forcing procedure duration at pick-up speed.	0...250	min	60	60	60	60	60	60	60	60	60
AL (Alarms)												

PAR	Description	Range	UM	Value	AP1	AP2	AP3	AP4	AP5	AP6	AP7	AP8
rA1	Sets probe 1 used for temperature alarms. • **diS** (0) = disabled • **Pb1** (1) = probe Pb1 • **Pb2** (2) = probe Pb2 • **Pb3** (3) = probe Pb3 • **Pb4** (4) = probe Pb4 • **Pb5** (5) = probe Pb5 • **Pbi** (6) = virtual probe • **PFi** (7) = filtered virtual probe	diS, Pb1...Pb5, Pbi, PFi	num	Pb1	Pb1	Pb1	Pb1	Pb1	Pb1	Pb1	Pb1	Pb1
rA2	Sets probe 2 used for temperature alarms. Same as **rA1**.	diS, Pb1...Pb5, Pbi, PFi	num	diS	diS	diS	diS	diS	diS	diS	diS	diS
Att	Sets the absolute or relative value for parameters **HA1/HA2** and **LA1/LA2**. • **AbS** (0) = absolute value • **rEL** (1) = relative value	AbS/rEL	flag	rEL	rEL	rEL	rEL	rEL	rEL	rEL	rEL	rEL
AFd	Alarm activation differential.	0.1...25.0	°C/°F	2.0	2.0	2.0	2.0	2.0	2.0	2.0	2.0	2.0
HA1	Probe 1 maximum alarm (only if **rA1**≠ dis). Temperature value (**Att** function) which, when exceeded, will lead to the activation of alarm signaling.	LA1...302	°C/°F	10.0	10.0	10.0	10.0	10.0	10.0	10.0	10.0	10.0
LA1	Probe 1 minimum alarm (only if **rA1**≠diS). Temperature value (**Att** function) which, when exceeded, will lead to the activation of alarm signaling.	-58.0...HA1	°C/°F	-10.0	-10.0	-10.0	-10.0	-10.0	-10.0	-10.0	-10.0	-10.0
HA2	Probe 2 maximum alarm (only if **rA2**≠ dis). Temperature value (**Att** function) which, when exceeded, will lead to the activation of alarm signaling.	LA2...302	°C/°F	0.0	0.0	0.0	0.0	0.0	0.0	0.0	0.0	0.0
LA2	Probe 2 minimum alarm (only if **rA2**≠ dis). Temperature value (**Att** function) which, when exceeded, will lead to the activation of alarm signaling.	-58.0...HA2	°C/°F	0.0	0.0	0.0	0.0	0.0	0.0	0.0	0.0	0.0
PAO	Alarm exclusion time when switching on the device, after a power outage. Refers only to high and low temperature alarms.	0...10	hours	3	3	3	3	3	3	3	3	3
dAO	Temperature alarm exclusion time after defrosting.	0...250	min	30	30	30	30	30	30	30	30	30
OAO	Alarm signaling delay (for high and low temperature) after deactivation of the digital input (door closure).	0...10	hours	0	0	0	0	0	0	0	0	0
tdO	Door open alarm activation delay time.	0...250	min	0	0	0	0	0	0	0	0	0
tA1	Temperature alarm 1 signaling delay (only if **rA1**≠diS). Refers only to high and low temperature alarms **LA1** and **HA1**.	0...250	min	30	30	30	30	30	30	30	30	30
tA2	Temperature alarm 2 signaling delay (only if **rA2**≠diS). Refers only to high and low temperature alarms **LA2** and **HA2**.	0...250	min	0	0	0	0	0	0	0	0	0
dAt	Defrost ended due to timeout alarm indication. • **no**(0) = alarm not activated • **yES**(1) = alarm activated	no/yES	flag	no	no	no	no	no	no	no	no	no
EAL	An external alarm inhibits the regulators. • **0** = does not inhibit the regulators • **1** = compressor and defrost inhibited • **2** = fans, compressor and defrost inhibited;	0/1/2	num	0	0	0	0	0	0	0	0	0

PAR	Description	Range	UM	Value	AP1	AP2	AP3	AP4	AP5	AP6	AP7	AP8
rA3	Sets the input used by the two thresholds alarm regulator. • **diS** (0) = disabled • **Pb1** (1) = probe Pb1 • **Pb2** (2) = probe Pb2 • **Pb3** (3) = probe Pb3 • **Pb4** (4) = probe Pb4 • **Pb5** (5) = probe Pb5 • **Pbi** (6) = virtual probe • **PFi** (7) = filtered virtual probe • **PbC** (8) = probe Pb8 KDX terminal	diS, Pb1...Pb5, Pbi, PFi, PbC	num	diS	diS	diS	diS	diS	diS	diS	diS	diS
ALL	Low alarm threshold (warning).	0.0...ALH	num	30.0	30.0	30.0	30.0	30.0	30.0	30.0	30.0	30.0
ALH	High alarm threshold (alarm).	ALL...100	num	50.0	50.0	50.0	50.0	50.0	50.0	50.0	50.0	50.0
dAL	2 thresholds alarm regulator differential.	0.1...100	°C/°F	5.0	5.0	5.0	5.0	5.0	5.0	5.0	5.0	5.0
AL1	Minimum persistence time above the **ALL** threshold due to alarm activation.	0...250	min	1	1	1	1	1	1	1	1	1
AL2	Minimum persistence time above the **ALH** threshold due to alarm activation.	0...250	min	0	0	0	0	0	0	0	0	0
tP	Alarm acknowledgment with any key. • **no** (0) = silencing disabled • **yES** (1) = silencing enabled.	no/yES	flag	yES	yES	yES	yES	yES	yES	yES	yES	yES
Art	**AtS** alarm activation period (Link2 supervision). The **AtS** alarm is not shown on the display: • if **Art**=0 it is disabled • if **Art**=1 it is reset automatically after 5 minutes • if **Art**≥2 it is reset automatically after 10 minutes.	0...250	min*10	0	0	0	0	0	0	0	0	0
ttA	Manage temperature alarms with door open. • **0** = alarms disabled • **1** = alarms enabled.	0/1	flag	1	1	1	1	1	1	1	1	1
Lit (Lights and Digital Inputs)												
dSd	Enable light relay from door switch. • **no** (0) = door opening does not switch on the light • **yES** (1) = door opening switches on the light (if it was off).	no/yES	flag	no	no	no	no	no	no	no	no	no
dLt	Light relay (cold room light) deactivation (switch-off) delay. The cold room light remains on for **dLt** minutes after the door is closed (only if **dSd**=yES).	0...250	min	0	0	0	0	0	0	0	0	0
OFL	Enables cold room light switch-off via key, even if the delay **dLt** is enabled. • **no** (0) = no • **yES** (1) = yes	no/yES	flag	no	no	no	no	no	no	no	no	no
dOd	Digital input shuts off utilities. • **0** = disabled • **1** = disables fans • **2** = disables compressor • **3** = disables fans and compressor.	0...3	num	0	0	0	0	0	0	0	0	0

PAR	Description	Range	UM	Value	AP1	AP2	AP3	AP4	AP5	AP6	AP7	AP8
dOA	Behavior forced from digital input (only if **PEA**≠0). • **0** = compressor activation • **1** = fan activation • **2** = compressor and fan activation • **3** = compressor deactivation • **4** = fan deactivation • **5** = compressor and fan deactivation.	0...5	num	0	0	0	0	0	0	0	0	0
PEA	Selection of digital input with resource inhibiting/unlocking function. • **0** = function disabled • **1** = associated with door switch • **2** = associated with external alarm • **3** = associated with external alarm and door switch.	0...3	num	0	0	0	0	0	0	0	0	0
dCO	Compressor activation/switch-off delay after consent (DI activation).	0...250	min	0	0	0	0	0	0	0	0	0
dFO	Fan activation/switch-off delay after consent (DI activation).	0...250	min	0	0	0	0	0	0	0	0	0
ASb	Sets whether the light key and light enabling when door opened function can be activated even while the controller is OFF. • **no** (0) = disables the relay until stand-by mode has been exited • **yES** (1) = the relay status does not change and it can be activated/disabled via key.	no/yES	flag	no	no	no	no	no	no	no	no	no
Lin (Link2)												
L00	Probe shared via Link2: • **diS** (0) = disabled • **Pb1** (1) = probe Pb1 • **Pb2** (2) = probe Pb2 • **Pb3** (3) = probe Pb3 • **Pb4** (4) = probe Pb4 • **Pb5** (5) = probe Pb5 • **Pbi** (6) = virtual probe • **PFi** (7) = filtered virtual probe	diS, Pb1...Pb5, Pbi, PFi	num	diS	diS	diS	diS	diS	diS	diS	diS	diS
L01	Shares the displayed value with the Link2 network. • **0** = prevents sending the displayed value from the device to the Link2 network • **1** = enables sending the displayed value from the device to the Link2 network • **2** = displays the value of the device with setting **L01** = 1.	0/1/2	num	0	0	0	0	0	0	0	0	0
L02	Sends the Setpoint value to the Link2 network when it is changed. • **no** (0) = no • **yES** (1) = yes.	no/yES	flag	no	no	no	no	no	no	no	no	no
L03	Enables the sending of the defrost request to the Link2 network. • **0** = send defrost request disabled • **1** = primary device for sending simultaneous defrost request • **2** = primary device for sending sequential defrost request	0/1/2	num	0	0	0	0	0	0	0	0	0

PAR	Description	Range	UM	Value	AP1	AP2	AP3	AP4	AP5	AP6	AP7	AP8
L04	Defrost end method. • **ind** (0) = independent • **dEP** (1) = dependent. Waits for all controllers to have finished defrosting.	ind/dEP	flag	ind	ind	ind	ind	ind	ind	ind	ind	ind
L05	Enables Stand-by command synchronization • **no** (0) = no • **yES** (1) = yes	no/yES	flag	no	no	no	no	no	no	no	no	no
L06	Enables light command synchronization • **no** (0) = no • **yES** (1) = yes	no/yES	flag	no	no	no	no	no	no	no	no	no
L07	Enables Energy Saving command synchronization • **no** (0) = no • **yES** (1) = yes	no/yES	flag	no	no	no	no	no	no	no	no	no
L08	Enables AUX command synchronization • **no** (0) = no • **yES** (1) = yes	no/yES	flag	no	no	no	no	no	no	no	no	no
L09	Enables sharing of the saturation probe (pressure). • **no** (0) = no • **yES** (1) = yes	no/yES	flag	no	no	no	no	no	no	no	no	no
L10	Dependent defrost end timeout.	0...250	min	30	30	30	30	30	30	30	30	30
L11	Number of devices connected to Link2. If the number of devices differs from the set value, a Link2 alarm will be activated (**ELi**).	0...8	num	0	0	0	0	0	0	0	0	0
L12	Alarm relay sharing method via Link2: • **0** = function disabled • **1** = primary alarm relay (The relay is activated from local alarm relay or secondary alarm relay) • **2** = secondary alarm relay	0/1/2	num	0	0	0	0	0	0	0	0	0
L13	Link2 serial frame configuration • **0** = DOMINO ZERO operation • **1** = standard operation (with non-DOMINO ZERO device)	0/1	flag	0	0	0	0	0	0	0	0	0
L14	Force cooling mode • **0** = disabled • **1** = force cooling mode when at least one device in a Link2 network is in defrost	0/1	flag	0	0	0	0	0	0	0	0	0
L15	Share buzzer and alarm silenced command via Link2 • **0** = function disabled • **1** = main board • **2** = remote board (shares buzzer and alarm silenced command with main board)	0/1/2	flag	0	0	0	0	0	0	0	0	0
dEC (Deep cooling cycle)												
dCS	Deep cooling cycle setpoint	-58.0...302	°C/°F	0,0	0,0	0,0	0,0	0,0	0,0	0,0	0,0	0,0
tdC	Deep cooling cycle duration	0...250	min	0	0	0	0	0	0	0	0	0
dCC	Defrost delay after a deep cooling cycle	0...250	min	0	0	0	0	0	0	0	0	0
EnS (Energy Saving)												

PAR	Description	Range	UM	Value	AP1	AP2	AP3	AP4	AP5	AP6	AP7	AP8
ESt	Type of event activated via RTC. • **0** = disabled • **1** = Energy Saving • **2** = Energy Saving + Light off • **3** = Energy Saving + Light off + AUX output active • **4** = Device off • **5** = Energy saving + Terminal buzzer silencing • **6** = Energy saving + Light off + Terminal buzzer silencing • **7** = Energy Saving + Light off + AUX output active + Terminal buzzer silencing • **8** = Device off + Terminal buzzer silencing	0...8	num	0	0	0	0	0	0	0	0	0
ESF	Activates night mode (energy saving) for the fans. • **no** (0) = disabled • **yES** (1) = enabled if energy saving mode is active (only if **ESt**≠0 and **ESt**≠4).	no/yES	flag	0	0	0	0	0	0	0	0	0
Cdt	Door closure time due to dynamic setpoint activation.	0...255	min*10	0	0	0	0	0	0	0	0	0
ESO	Cumulative door open time due to dynamic setpoint disabling.	0...10	num	0	0	0	0	0	0	0	0	0
OS1	Offset on setpoint 1 (SP1) in energy saving mode.	-50.0...50.0	°C/°F	3.0	3.0	3.0	3.0	3.0	3.0	3.0	3.0	3.0
OS2	Offset on setpoint 2 (SP2) in energy saving mode (only if **rE**≠0).	-50.0...50.0	°C/°F	0.0	0.0	0.0	0.0	0.0	0.0	0.0	0.0	0.0
Od1	Energy saving offset 1 for refrigerated display cabinets.	-50.0...50.0	°C/°F	0.0	0.0	0.0	0.0	0.0	0.0	0.0	0.0	0.0
Od2	Energy saving offset 2 for refrigerated display cabinets (only if **rE**≠0).	-50.0...50.0	°C/°F	0.0	0.0	0.0	0.0	0.0	0.0	0.0	0.0	0.0
dn1	Differential on setpoint 1 (SP1) in energy saving mode.	-58.0...302	°C/°F	4.0	4.0	4.0	4.0	4.0	4.0	4.0	4.0	4.0
dn2	Differential on setpoint 2 (SP2) in energy saving mode (only if **rE**≠0).	-58.0...302	°C/°F	4.0	4.0	4.0	4.0	4.0	4.0	4.0	4.0	4.0
EdH	Weekday Energy Saving start hour. • **0...23** = start hour • **24** = disabled	0...24	hours	24	24	24	24	24	24	24	24	24
Edn	Weekday Energy Saving start minutes.	0...59	min	0	0	0	0	0	0	0	0	0
Edd	Weekday Energy Saving duration.	1...72	hours	10	10	10	10	10	10	10	10	10
EFH	Weekend/holiday Energy Saving start hour. • **0...23** = start hour • **24** = disabled	0...24	hours	24	24	24	24	24	24	24	24	24
EFn	Weekend/holiday Energy Saving start minutes.	0...59	min	0	0	0	0	0	0	0	0	0
EFd	Weekend/holiday Energy Saving duration.	1...72	hours	24	24	24	24	24	24	24	24	24
FrH (Frame Heater)												

PAR	Description	Range	UM	Value	AP1	AP2	AP3	AP4	AP5	AP6	AP7	AP8
FH	Anti-sweater heaters probe (FH). • **diS** (0) = disabled • **dc** (1) = duty cycle • **Pb1** (2) = probe Pb1 • **Pb2** (3) = probe Pb2 • **Pb3** (4) = probe Pb3 • **Pb4** (5) = probe Pb4 • **Pb5** (6) = probe Pb5 • **Pbi** (7) = virtual probe • **PFi** (8) = filtered virtual probe • **PbC** (9) = probe Pb8 KDX terminal	diS, dc, Pb1...Pb5, Pbi, PFi, PbC	num	diS	diS	diS	diS	diS	diS	diS	diS	diS
FHt	Anti-sweater heaters operating period duration (FH), only used if the OC output is used with SSR relay.	1...250	s*10	30	30	30	30	30	30	30	30	30
FH0	Setpoint corresponding to the anti-sweater heaters (only if **FH**≠dis and **FH**≠dc).	-58.0...302	°C/°F	0.0	0.0	0.0	0.0	0.0	0.0	0.0	0.0	0.0
FH1	Offset corresponding to the anti-sweater heaters (only if **FH**≠dis and **FH**≠dc).	0.0...25.0	°C/°F	0.0	0.0	0.0	0.0	0.0	0.0	0.0	0.0	0.0
FH2	Band corresponding to the anti-sweater heaters (only if **FH**≠dis and **FH**≠dc).	-58.0...302	°C/°F	0.0	0.0	0.0	0.0	0.0	0.0	0.0	0.0	0.0
FH3	Minimum percentage for the anti-sweater heaters (only if **FH**≠dis and **FH**≠dc).	0...100	%	0	0	0	0	0	0	0	0	0
FH4	Maximum percentage for the day Duty cycle.	0...100	%	75	75	75	75	75	75	75	75	75
FH5	Maximum percentage for the night Duty cycle.	0...100	%	50	50	50	50	50	50	50	50	50
FH6	Anti-sweater heaters percentage during defrost.	0...100	%	100	100	100	100	100	100	100	100	100
Add (Communication)												
Adr	Modbus protocol controller address.	1...250	flag	1 (not in applications)								
bAU	Modbus Baudrate selection. • **96** (0) = 9600 • **192** (1) = 19200 • **384** (2) = 38400	96/192/384	num	192 (not in applications)								
Pty	Modbus parity bit. • **n**(0) = none • **E**(1) = even • **o**(2) = odd.	n/E/o	num	E (not in applications)								
diS (Display)												
LOC	LOCk. Setpoint change lock. It is still possible to enter parameter programming and change them, including the status of this parameter in order to unlock the terminal. • **no** (0) = no • **yES** (1) = yes	no/yES	flag	no	no	no	no	no	no	no	no	no
PS1	PAssword 1. When enabled (**PS1**≠0) this is the access key for level 1 parameters (**User**).	0...250	num	0	0	0	0	0	0	0	0	0
PS2	PAssword 2. When enabled (**PS2**≠0) this is the access key for level 2 parameters (**Installer**).	0...250	num	15	15	15	15	15	15	15	15	15
ndt	Display with decimal point. • **no** (0) = no (integers only) • **yES** (1) = yes (display with decimal).	no/yES	flag	yES	yES	yES	yES	yES	yES	yES	yES	yES

PAR	Description	Range	UM	Value	AP1	AP2	AP3	AP4	AP5	AP6	AP7	AP8
CA1	Calibration of probe Pb1 (only if **H41**≠Pro). Positive or negative temperature values that are added to those read by Pb1. This sum is used for the displayed temperature as well as for the regulation.	-30.0...30.0	°C/°F	0.0	0.0	0.0	0.0	0.0	0.0	0.0	0.0	0.0
CA2	Calibration of probe Pb2 (only if **H42**≠Pro). Positive or negative temperature values that are added to those read by Pb2. This sum is used for the displayed temperature as well as for the regulation.	-30.0...30.0	°C/°F	0.0	0.0	0.0	0.0	0.0	0.0	0.0	0.0	0.0
CA3	Calibration of probe Pb3 (only if **H43**≠Pro). Positive or negative temperature values that are added to those read by Pb3. This sum is used for the displayed temperature as well as for the regulation.	-30.0...30.0	°C/°F	0.0	0.0	0.0	0.0	0.0	0.0	0.0	0.0	0.0
CA4	Calibration of probe Pb4 (only if **H44**≠Pro). Positive or negative temperature values that are added to those read by Pb4. This sum is used for the displayed temperature as well as for the regulation.	-30.0...30.0	°C/°F	0.0	0.0	0.0	0.0	0.0	0.0	0.0	0.0	0.0
CA5	Calibration of probe Pb5 (only if **H45**≠Pro). Positive or negative temperature values that are added to those read by Pb5. This sum is used for the displayed temperature as well as for the regulation.	-30.0...30.0	°C/°F	0.0	0.0	0.0	0.0	0.0	0.0	0.0	0.0	0.0
CA6	Calibration of pressure transducer Pb6 (4...20 mA) (only if **H46**=Pro). Positive or negative temperature values that are added to those read by pressure transducer Pb6 (4...20 mA). This sum is used for the displayed temperature as well as for the regulation.	-30.0...30.0	bar/psi	0.0	0.0	0.0	0.0	0.0	0.0	0.0	0.0	0.0
CA7	Calibration of ratiometric transducer Pb7 (only if **H47**=Pro). Positive or negative temperature values that are added to those read by ratiometric transducer Pb7. This sum is used for the displayed temperature as well as for the displayed temperature as well as for the regulation.	-30.0...30.0	bar/psi	0.0	0.0	0.0	0.0	0.0	0.0	0.0	0.0	0.0
LdL	Minimum value that can be displayed by the device.	-58.0...HdL	°C/°F	-40.0	-40.0	-40.0	-40.0	-40.0	-40.0	-40.0	-40.0	-40.0
HdL	Maximum value that can be displayed by the device.	LdL...302	°C/°F	100	100	100	100	100	100	100	100	100
ddL	Display mode during defrosting. • **0** = display the temperature read by the probe or the setpoint (see **ddd**) • **1** = locks the reading at the temperature value read by the probe at the start of defrost until reaching SEt (or until the expiration of **Ldd**) • **2** = displays label dEF during defrost until reaching SEt (or until the expiration of **Ldd**).	0/1/2	num	0	0	0	0	0	0	0	0	0
Ldd	Display unlocking timeout value.	0...250	min	0	0	0	0	0	0	0	0	0

PAR	Description	Range	UM	Value	AP1	AP2	AP3	AP4	AP5	AP6	AP7	AP8
drO	Selects the unit of measure used when displaying the temperature read by the probes. • **C** (0) = °C • **F** (1) = °F	C/F	flag	C	C	C	C	C	C	C	C	C
SbP	Selects the unit of measure for displaying the value read by the pressure sensors 4...20 mA (Pb6) and ratiometric sensors (Pb7). • **bar** (0) = bar • **psi** (1) = psi.	bar/psi	flag	bar	bar	bar	bar	bar	bar	bar	bar	bar
rEP	Selects relative/absolute pressure. • **0** = relative pressure • **1** = absolute pressure	0/1	flag	0 (not in applications)								
ddd	Sets the value to show on the display. • **SP1** (0) = setpoint SP1 • **Pb1** (1) = probe Pb1 • **Pb2** (2) = probe Pb2 • **Pb3** (3) = probe Pb3 • **Pb4** (4) = probe Pb4 • **Pb5** (5) = probe Pb5 • **Pbi** (6) = virtual probe • **LP** (7) = remote probe • **PFi** (8) = filtered virtual probe	SP1, Pb1...Pb5, Pbi, LP, PFi	num	Pb1	Pb1	Pb1	Pb1	Pb1	Pb1	Pb1	Pb1	Pb1
ddE	Sets the value to show on the display of the Echo module. • **SP1** (0) = setpoint SP1 • **Pb1** (1) = probe Pb1 • **Pb2** (2) = probe Pb2 • **Pb3** (3) = probe Pb3 • **Pb4** (4) = probe Pb4 • **Pb5** (5) = probe Pb5 • **Pbi** (6) = virtual probe • **LP** (7) = remote probe • **PFi** (8) = filtered virtual probe • **PbC** (9) = probe Pb8 KDX terminal • **PHr** (10) = probe Pb8 KDX terminal with %RH icon • **rtC** (11) = hours and minutes (KDX terminal only)	SP1, Pb1...Pb5, Pbi, LP, PFi, PbC, PHr, rtC	num	Pb1	Pb1	Pb1	Pb1	Pb1	Pb1	Pb1	Pb1	Pb1
HCP (HACCP)												
rPH	Sets which probe the HACCP alarms will use. • **diS** (0) = disabled • **Pb1** (1) = probe Pb1 • **Pb2** (2) = probe Pb2 • **Pb3** (3) = probe Pb3 • **Pb4** (4) = probe Pb4 • **Pb5** (5) = probe Pb5	diS, Pb1...Pb5	num	diS	diS	diS	diS	diS	diS	diS	diS	diS
CnF (Configuration)												

PAR	Description	Range	UM	Value	AP1	AP2	AP3	AP4	AP5	AP6	AP7	AP8
trA	Selects the model of ratiometric transducer used. • **USE** (0) = Generic Probe Set by customer • **rA1** (1) = EWPA 010 R 0/5 V 0/10 BAR FEMALE • **rA2** (2) = EWPA 030 R 0/5 V 0/30 BAR FEMALE • **rA3** (3) = EWPA 050 R 0/5 V 0/50 BAR FEMALE • **rA4** (4) = AKS 32R -1 ...6 BAR • **rA5** (5) = AKS 32R -1 ...12 BAR • **rA6** (6) = AKS 32R -1 ... 20 BAR • **rA7** (7) = AKS 32R -1 ... 34 BAR • **rA8** (8) = Reserved. **Note**: The upper and lower limits of probes rA1... rA8 are pre-set (and cannot be changed), while if you select USE you will need to set them via parameters **H05** and **H06**.	USE, rA1...rA8	num	USE (not in applications)								
H00	Select probe type used (Pb1...Pb5). • **ntc** (0) = NTC • **Ptc** (1) = PTC • **Pt1** (2) = Pt1000	ntc, PTC, Pt1	num	ntc	ntc	ntc	ntc	ntc	ntc	ntc	ntc	ntc
H02	Key activation time, when configured with a second function. For the ESC, UP and DOWN keys configured with a second function (defrost, AUX, etc.), this sets the time for quick activation of that function. AUX and LIGHT are not included in this, as they have a fixed time of 0.5 seconds.	0...250	s	5	5	5	5	5	5	5	5	5
H03	Lower limit for pressure transducer Pb6 4-20 mA (relative pressure).	-1.0...H04	bar	-1.0 (not in applications)								
H04	Upper limit for pressure transducer Pb6 4-20 mA (relative pressure).	H03...150	bar	7.0 (not in applications)								
H05	Lower limit for ratiometric transducer Pb7 (relative pressure).	-1.0...H06	bar	-1.0 (not in applications)								
H06	Upper limit for ratiometric transducer Pb7 (relative pressure).	H05...150	bar	7.0 (not in applications)								
08L	KDX analog input lower limit.	0.0...100.0	num	0.0 (not in applications)								
08H	KDX analog input upper limit.	0.0...100.0	num	100.0 (not in applications)								
08P	Sets how show the value on the display of the **KDX** echo: • **0** = value with decimal point • **1** = value without decimal point • **2** = value * 10	0/1/2	num	0 (not in applications)								
08U	Unit of measure of the KDX terminal analogue input. • **0** = disabled • **1** = %RH (humidity) • **2** = ppm • **3** = % (valve opening) • **4** = °C • **5** = °F	0...5	num	0 (not in applications)								

PAR	Description	Range	UM	Value	AP1	AP2	AP3	AP4	AP5	AP6	AP7	AP8
H08	Stand-by operating mode • **0** = display off; the regulators are active and the device signals possible alarms by reactivating the display • **1** = display off; the regulators and the alarms are blocked • **2** = the display shows the label “OFF”; the regulators and alarms are inhibited.	0/1/2	num	2	2	2	2	2	2	2	2	2
H11	Configuration of digital input 1/polarity (Pb1) (only if **H41**=di). • **0** = disabled • **±1** = start of defrost • **±2** = end of defrost • **±3** = light • **±4** = energy saving • **±5** = AUX • **±6** = external alarm • **±7** = stand-by • **±8** = door switch • **±9** = preheat alarm • **±10** = reserved • **±11** = reserved • **±12** = reserved • **±13** = deep cooling cycle (DCC) • **±14** = force EEV deactivation • **±15** = force fan activation • **±16** = force **OF1** (remote offset) • **±17** = general input • **±18** = force cooling • **±19** = panic alarm **Note**: • the **+** sign indicates that the input is active if the contact is closed. • the **-** sign indicates that the input is active if the contact is open.	-19...+19	num	0	0	0	0	0	0	0	0	0
H12	Configuration of digital input 2/polarity (Pb2) (only if **H42**=di). Same as **H11**.	-19...+19	num	0	0	0	0	0	0	0	0	0
H13	Configuration of digital input 3/polarity (Pb3) (only if **H43**=di). Same as **H11**.	-19...+19	num	0	0	0	0	0	0	0	0	0
H14	Configuration of digital input 4/polarity (Pb4) (only if **H44**=di). Same as **H11**.	-19...+19	num	0	0	0	0	0	0	0	0	0
H15	Configuration of digital input 5/polarity (Pb5) (only if **H45**=di). Same as **H11**.	-19...+19	num	0	0	0	0	0	0	0	0	0
H16	Configuration of digital input 6/polarity (Pb6) (only if **H46**=di). Same as **H11**.	-19...+19	num	0	0	0	0	0	0	0	0	0
H17	Configuration of digital input 7/polarity (Pb7) (only if **H47**=di). Same as **H11**.	-19...+19	num	0	0	0	0	0	0	0	0	0
H18	Digital input 8/polarity (DI) configuration. Same as **H11**.	-19...+19	num	0	0	0	0	-8	-8	-8	0	0
i01	Digital input 9/polarity (DI1 KDX) configuration. Same as **H11**.	-19...+19	num	0	0	0	0	0	0	0	0	0
i02	Digital input 10/polarity (DI2 KDX) configuration. Same as **H11**.	-19...+19	num	0	0	0	0	0	0	0	0	0
dti	Unit of measure for digital inputs DI1 (Pb1), DI2 (Pb2), DI, i01 (DI1 KDX) and i02 (DI2 KDX). If one of the digital inputs indicated is configured as DI, the unit of measure can be set. • **0** = minutes • **1** = seconds.	0/1	flag	0	0	0	0	0	0	0	0	0
d11	Digital input 1 activation delay (Pb1) (only if **H41**=di).	0...255	see **dti**	0	0	0	0	0	0	0	0	0

PAR	Description	Range	UM	Value	AP1	AP2	AP3	AP4	AP5	AP6	AP7	AP8
d12	Digital input 2 activation delay (Pb2) (only if **H42**=di).	0...255	see **dti**	0	0	0	0	0	0	0	0	0
d13	Digital input 3 activation delay (Pb3) (only if **H43**=di).	0...255	min	0	0	0	0	0	0	0	0	0
d14	Digital input 4 activation delay (Pb4) (only if **H44**=di).	0...255	min	0	0	0	0	0	0	0	0	0
d15	Digital input 5 activation delay (Pb5) (only if **H45**=di).	0...255	min	0	0	0	0	0	0	0	0	0
d16	Digital input 6 activation delay (Pb6) (only if **H46**=di).	0...255	min	0	0	0	0	0	0	0	0	0
d17	Digital input 7 activation delay (Pb7) (only if **H47**=di).	0...255	min	0	0	0	0	0	0	0	0	0
d18	Digital input 8 (DI) activation delay.	0...255	min	0	0	0	0	0	0	0	0	0
01i	Digital input 9 (DI1 KDX) activation delay.	0...255	min	0	0	0	0	0	0	0	0	0
02i	Digital input 10 (DI2 KDX) activation delay.	0...255	min	0	0	0	0	0	0	0	0	0
H21	Digital output 1 configuration (**OUT1**): • **0** = disabled • **1** = compressor • **2** = defrost 1 / hot gas valve • **3** = evaporator fans • **4** = alarm • **5** = AUX • **6** = stand-by • **7** = light • **8** = anti-sweater heaters • **9** = defrost 2 • **10** = reserved • **11** = condenser fans • **12** = General purpose regulator • **13** = hot gas: evaporator suction valve • **14** = alarm with inverted polarity • **15** = casing heater • **16** = condensation collection heater • **17** = liquid valve • **18** = two threshold regulator alarm • **19** = door open alarm	0...19	num	1	1	1	1	1	1	1	1	1
H22	Digital output 2 configuration (**OUT2**). Same as **H21**.	0...19	num	3	3	3	3	3	3	3	3	3
H23	Digital output 3 configuration (**OUT3**). Same as **H21**.	0...19	num	2	2	2	2	2	2	2	2	2
H24	Digital output 4 configuration (**OUT4**). Same as **H21**.	0...19	num	7	7	7	7	7	7	7	7	7
H25	Digital output 5 configuration (**OUT5**). Same as **H21**.	0...19	num	5	5	5	0	0	0	0	0	0
H27	Configuration of digital output 7 (**Open Collector**). Same as **H21**.	0...19	num	0	0	0	0	0	0	0	0	0
H29	Enables buzzer on the terminal. • **diS** (0) = buzzer disabled • **En** (1) = buzzer enabled.	diS/En	flag	diS	diS	diS	diS	diS	diS	diS	diS	diS
d01	Digital output 8 configuration (**OUT5** KDX). Same as **H21**.	0...19	num	0	0	0	0	0	0	0	0	0
d02	Digital output 9 configuration (**OUT4** KDX). Same as **H21**.	0...19	num	0	0	0	0	0	0	0	0	0

PAR	Description	Range	UM	Value	AP1	AP2	AP3	AP4	AP5	AP6	AP7	AP8
H31	Configuration of the UP key. • **0** = Disabled • **1** = Defrost • **2** = Reduced set • **3** = Light • **4** = Energy saving • **5** = AUX • **6** = Stand-by • **7** = Deep cooling cycle (DCC) • **8** = Defrost start/stop • **9** = Cabinet cleaning function	0...9	num	1	1	1	1	1	1	1	1	1
H32	Configuration of the DOWN key. Same as **H31**.	0...9	num	0	0	0	0	0	0	0	0	0
H33	Configuration of the ESC key. Same as **H31**.	0...9	num	6	6	6	6	6	6	6	6	6
H34	Configuration of the Free 1 key. Same as **H31**.	0...9	num	3	3	3	3	3	3	3	3	3
H35	Configuration of the Free 2 key. Same as **H31**.	0...9	num	6	6	6	6	6	6	6	6	6
H36	Configuration of the Free 3 key. Same as **H31**.	0...9	num	0	0	0	0	0	0	0	0	0
H37	Configuration of the Free 4 key. Same as **H31**.	0...9	num	0	0	0	0	0	0	0	0	0
H41	Configuration of analog input 1 type (Pb1). • **diS** (0) = disabled • **di** (1) = digital input • **Pro** (2) = probe input	diS, di, Pro	num	Pro	Pro	Pro	Pro	Pro	Pro	Pro	Pro	Pro
H42	Configuration of analog input 2 type (Pb2). Same as **H41**.	diS, di, Pro	num	Pro	Pro	Pro	Pro	Pro	Pro	Pro	Pro	Pro
H43	Configuration of analog input 3 type (Pb3). Same as **H41**.	diS, di, Pro	num	Pro	Pro	Pro	Pro	Pro	Pro	Pro	Pro	Pro
H44	Configuration of analog input 4 type (Pb4). Same as **H41**.	diS, di, Pro	num	diS	diS	diS	diS	diS	diS	diS	diS	diS
H45	Configuration of analog input 5 type (Pb5). Same as **H41**.	diS, di, Pro	num	Pro	Pro	Pro	Pro	Pro	Pro	Pro	Pro	Pro
H46	Configuration of analog input 6 type (Pb6 = 4...20 mA). Same as **H41**.	diS, di, Pro	num	Pro	Pro	Pro	Pro	Pro	Pro	Pro	Pro	Pro
H47	Configuration of analog input 7 type (Pb7). Same as **H41**.	diS, di, Pro	num	diS	diS	diS	diS	diS	diS	diS	diS	diS
H48	Configuration of analog input 8 type (KDX probe). • **diS** (0) = disabled • **nu** (1) = reserved • **Pro** (2) = probe input	diS, nu, Pro	num	diS	diS	diS	diS	diS	diS	diS	diS	diS
H50	Configuration of analog output type. • **010** (0) = 0...10 V output • **420** (1) = 4...20 mA output	010/420	flag	010	010	010	010	010	010	010	010	010
H51	Regulator associated with analog output. • **diS** (0) = disabled • **FH** (1) = Anti-sweater heaters (Frame Heater) • **PEr** (2) = Valve output opening percentage • **FAn** (3) = Fan modulation	diS, FH, PEr, FAn	num	diS	diS	diS	diS	diS	diS	diS	diS	diS

PAR	Description	Range	UM	Value	AP1	AP2	AP3	AP4	AP5	AP6	AP7	AP8
H60	Display selected application. • **0** = disabled • **1** = AP1 • **2** = AP2 • **3** = AP3 • **4** = AP4 • **5** = AP5 • **6** = AP6 • **7** = AP7 • **8** = AP8	0...8	num	1 (not in applications)								
H68	RTC present. • **no** (0) = RTC not present • **yES** (1) = RTC present	no/yES	flag	yES	yES	yES	yES	yES	yES	yES	yES	yES
H70	Sets 1st probe to use as a virtual probe. • **diS** (0) = disabled • **Pb1** (1) = probe Pb1 • **Pb2** (2) = probe Pb2 • **Pb3** (3) = probe Pb3 • **Pb4** (4) = probe Pb4 • **Pb5** (5) = probe Pb5	diS, Pb1...Pb5	num	diS	diS	diS	diS	diS	diS	diS	diS	diS
H71	Sets 2nd probe to use as a virtual probe. Same as **H70**.	diS, Pb1...Pb5	num	diS	diS	diS	diS	diS	diS	diS	diS	diS
H72	% calculation used by the virtual probe for daytime.	0...100	num	50	50	50	50	50	50	50	50	50
H73	% calculation used by the virtual probe for night-time (Energy Saving mode).	0...100	num	50	50	50	50	50	50	50	50	50
H74	Sets the probe used as filtered virtual probe (PFi). • **diS** (0) = disabled • **Pb1** (1) = probe Pb1 • **Pb2** (2) = probe Pb2 • **Pb3** (3) = probe Pb3 • **Pb4** (4) = probe Pb4 • **Pb5** (5) = probe Pb5 • **Pbi** (6) = virtual probe	diS, Pb1...Pb5, Pbi	num	diS	diS	diS	diS	diS	diS	diS	diS	diS
H75	Alpha filter constant to use when calculating the value displayed by the filtered virtual probe (value in thousandths).	1...1000	num	1	1	1	1	1	1	1	1	1
H76	Offset value to use when calculating the value displayed by the filtered virtual probe.	-999.9...999.9	num	0.0	0.0	0.0	0.0	0.0	0.0	0.0	0.0	0.0
EE0 (Electronic Expansion Valve)												
Ety	Selects the type of driver for the electronic valve. • **0** = disabled • **1** = pulse driver.	0/1	num	1	1	1	1	1	1	1	1	1
rSP	Saturation probe. • **diS** (0) = disabled • **Pb6** (1) = pressure transducer 4...20 mA • **Pb7** (2) = ratiometric transducer • **LSP** (3) = remote probe (shared within the Link2 network) • **rP** (4) = remote probe (from supervisor).	diS, Pb6, Pb7, LSP, rP	num	Pb6 (not in applications)								

PAR	Description	Range	UM	Value	AP1	AP2	AP3	AP4	AP5	AP6	AP7	AP8
rSS	Superheat probe. • **diS** (0) = disabled • **Pb1** (1) = probe Pb1 • **Pb2** (2) = probe Pb2 • **Pb3** (3) = probe Pb3 • **Pb4** (4) = probe Pb4 • **Pb5** (5) = probe Pb5	diS, Pb1...Pb5	num	Pb5 (not in applications)								
rbu	Sets the saturation probe to use as a backup. • **diS** (0) = disabled • **LSP** (1) = backup saturation probe • **rP** (2) = remote probe (from supervisor)	diS, LSP, rP	num	diS (not in applications)								
EPd	Saturation value display mode. • **t** (0) = temperature • **P** (1) = pressure	t/P	flag	t (not in applications)								
Ert	Type of refrigerant. • **404** (0) = R404A • **r22** (1) = R22 • **410** (2) = R410A • **134** (3) = R134a • **744**(4) = R744 (CO2) • **507** (5) = R507A • **717** (6) = R717 (NH3) • **290** (7) = reserved • **407** (8) = R407A • **448** (9) = R448A • **449** (10) = R449A • **450** (11) = R450 • **513** (12) = R513A • **PAr_1** (13) = customizable 1 • **PAr_2** (14) = customizable 2 • **PAr_3** (15) = customizable 3 • **PAr_4** (16) = customizable 4 • **PAr_5** (17) = customizable 5 • **PAr_6** (18) = customizable 6 • **455** (19) = reserved **Note**: Contact Eliwell representative for customizable refrigerants.	404, r22, 410 134, 744, 507, 717, 290, 407, 448, 449 450, 513, PAr_ 1...PAr_6, 455	num	410 (not in applications)								
U02	Maximum valve opening percentage.	0...100	%	100 (not in applications)								
U05	Operating time at maximum opening before an alarm signal.	0...255	min	60 (not in applications)								
U06	Minimum useful valve opening percentage.	0...100	%	10 (not in applications)								
U07	Maximum useful valve opening percentage.	0...100	%	90 (not in applications)								
U08	Sets the fixed opening percentage for the valve if the pressure sensor is not working (**U22**=diS).	0...100	%	0 (not in applications)								
U09	Minimum time needed to evaluate predictive filter parameters	0.0...3276.7	s	4.0 (not in applications)								
U10	Expired time predictive filter parameters	0...32767	s	1800 (not in applications)								
U11	Minimum superheat temperature speed	-999.9...999.9	°C/s	-0.1 (not in applications)								
U12	Minimum superheat to consider the evaporator empty	0...999,9	°C/°F	30.0 (not in applications)								

PAR	Description	Range	UM	Value	AP1	AP2	AP3	AP4	AP5	AP6	AP7	AP8
U13	Indicates the updating frequency for values relating to the thermodynamic cycle. • if **U13** is decreased, updating will be more frequent • if **U13** is increased, updating will be less frequent	0...3600	s	15 (not in applications)								
U14	Type of superheat control for the thermodynamic cycle of the refrigerated cabinet. • if **U14** is decreased, the refrigerated cabinet superheat temperature tends towards the value of parameter **OLt** (Minimum superheat threshold), becoming more reactive • if **U14** is increased, the refrigerated cabinet superheat temperature tends to greater regulation stability approaching parameter **OLt** (Minimum superheat threshold) **OPERATING PROCEDURE** To optimize cabinet performance: • if the superheat temperature > **OLt**, decrease **U14** value • if the superheat temperature < **OLt**, increase **U14** value	0.0...U15	°C/°F	40.0 (not in applications)								
U15	Maximum superheat pass band	0.0...999.9	°C/°F	500 (not in applications)								
U16	Default superheat pass band	0.0...999.9	°C/°F	20.0 (not in applications)								
U17	Upper threshold multiplier continuous modulation	0.0...999.9	num	0.3 (not in applications)								
U18	Lower threshold multiplier continuous modulation	0.0...999.9	num	1.0 (not in applications)								
U20	Continuous modulation differential gain	0.0...999.9	num	900 (not in applications)								
U21	Maximum valve open speed	0.0...999.9	%/s	2.0 (not in applications)								
U22	Type of controller behavior in the event that the pressure transducer is not working. • **diS** (0) = Fixed opening percentage. Refer to **U08** • **En** (1) = Backup saturation temperature. Refer to **U23**.	diS/En	flag	diS (not in applications)								
U23	Saturation temperature backup value in the event that the pressure transducer is not working.	-999.9...999.9	°C/°F	0.0 (not in applications)								

PAR	Description	Range	UM	Value	AP1	AP2	AP3	AP4	AP5	AP6	AP7	AP8
U25	Loads to be disabled in the event of a inoperable compressor. • **0** = Disabled • **1** = Defrost • **2** = Lights • **3** = Defrost and lights • **4** = Anti-sweater heaters • **5** = Defrost and anti-sweater heaters • **6** = Lights and anti-sweater heaters • **7** = Defrost, Lights and anti-sweater heaters • **8** = Evaporator fans • **9** = Defrost and fans • **10** = Lights and fans • **11** = Defrost, Lights and fans • **12** = Anti-sweater heaters and fans • **13** = Defrost, anti-sweater heaters and fans • **14** = Lights, anti-sweater heaters and fans • **15** = Defrost, lights, anti-sweater heaters and fans	0...15	num	0 (not in applications)								
U26	Saturation temperature threshold for detecting the faulty compressor in addition to disabling the loads.	-999.9...999.9	°C/°F	0.0 (not in applications)								
U27	Minimum valve opening percentage.	0.0...100	%	0.0 (not in applications)								
U51	Superheat filter calculation coefficient.	0...999	num	10 (not in applications)								
U52	Superheat offset integral time	0...999	s	900 (not in applications)								
U53	Pump out time. Valve closure time period.	0...600	s	0 (not in applications)								
U54	Pump in time. Valve opening time period at 100%.	0...600	s	0 (not in applications)								
U55	Pump out/in period. Time interval between the start of two subsequent pump out periods.	0...900	s*10	0 (not in applications)								
U56	If **U56** ≠ 0, allows a dynamic time recalculation of the gain refresh time.	0.0...10.0	°C/°F	5.0 (not in applications)								
U57	Superheat offset maximum value	0.0...10.0	°C/°F	0.0 (not in applications)								
U58	Sets if the controller consider also air temperature. • **0** = No • **1** = Yes	0/1	flag	0 (not in applications)								
U60	Minimum superheat filter threshold.	-99.9...0.0	°C/°F	-20.0 (not in applications)								
U61	Maximum superheat filter threshold.	0.0...99.9	°C/°F	20.0 (not in applications)								
U64	Valve opening percentage at temperature control startup.	0...100	%	0 (not in applications)								
U65	Valve fixed opening duration at temperature control startup.	0...999	s	0 (not in applications)								
U66	Selects the superheat regulation method. • **0** = 'Classic' regulation (for systems with remote group) • **1** = 'Soft superheat' regulation (for plug-in system)	0/1	flag	0 (not in applications)								
U67	Superheat lower threshold.	-99.9...OLt	°C/°F	0.0 (not in applications)								
U68	Time spent under the superheat lower threshold. **0** = threshold disabled.	0...600	s	60 (not in applications)								
OLt	Minimum superheat threshold.	0.0...999.9	°C/°F	5.0 (not in applications)								

PAR	Description	Range	UM	Value	AP1	AP2	AP3	AP4	AP5	AP6	AP7	AP8
A_F	Select PID automatic or manual mode. • **diS** = automático • **En** = manual	diS/En	flag	0 (not in applications)								
dUt	PID duty cycle in manual mode.	0...100	%	0 (not in applications)								
HOE	Enable MOP • **0** = disabled • **1** = enabled	0/1	flag	0 (not in applications)								
tAP	Minimum time maximum temperature threshold for alarm activation exceeded.	0...255	min	180 (not in applications)								
Hot	Maximum evaporator temperature threshold.	-999.9...999.9	°C/°F	0.0 (not in applications)								
HdP	MOP disable duration at startup.	0...999	min	0 (not in applications)								
HPb	MOP proportional band.	0.1...999.9	K	1.0 (not in applications)								
(*) Parameters visible at level 2 only if **E00** = 0 (custom valve).												
FPr (UNICARD)												
UL	Transfer of the programming parameters from the controller to the UNICARD/MFK.	/	/	/ (not in applications)								
dL	Transfer of the programming parameters from the UNICARD/MFK to the controller.	/	/	/ (not in applications)								
Fr	UNICARD formatting. Deletes all data on the UNICARD. **Note**: the use of parameter **Fr** results in the loss of all data entered. This operation cannot be reversed.	/	/	/ (not in applications)								
FnC (Functions) - Note : If the device is switched off the function labels will revert to default status (inactive). To change their status, press the “set” key												
dEF	Manual defrost activation. • Function active: **dEF** label and flashing icon • Function inactive: **dEF** label • Indication: Defrost icon flashing	/	/	/ (not in applications)								
AUX	Manual auxiliary output activation. • Function active: **Aon** label • Function inactive: **AoF** label • Indication: AUX icon steadily lit	/	/	/ (not in applications)								
Stand-by	Manual stand-by activation. • Function active: **ON** label • Function inactive: **OFF** label • Indication: Stand-by LED lit steadily (only **KDWPlus**)	/	/	/ (not in applications)								
OiL (Compressor oil heater)												
OHP	Sets the regulation probe used by the compressor oil heater. • **diS** (0) = disabled • **Pb1** (1) = probe Pb1 • **Pb2** (2) = probe Pb2 • **Pb3** (3) = probe Pb3 • **Pb4** (4) = probe Pb4 • **Pb5** (5) = probe Pb5 • **Pbi** (6) = virtual probe • **LP** (7) = remote probe • **PFi** (8) = filtered virtual probe	diS, Pb1...Pb5, Pbi, LP, PFi	num	diS	diS	diS	diS	diS	diS	diS	diS	diS
OSP	Sets the regulation setpoint used by the compressor oil heater.	OLS...OHS	°C/°F	1.0	1.0	1.0	1.0	1.0	1.0	1.0	1.0	1.0
OHd	Sets the regulation differential used by the compressor oil heater.	0.1...25.0	°C/°F	0.1	0.1	0.1	0.1	0.1	0.1	0.1	0.1	0.1

PAR	Description	Range	UM	Value	AP1	AP2	AP3	AP4	AP5	AP6	AP7	AP8
OHS	Maximum value that can be set for the compressor oil heater setpoint.	OLS...302	°C/°F	30.0	30.0	30.0	30.0	30.0	30.0	30.0	30.0	30.0
OLS	Minimum value that can be set for the compressor oil heater setpoint.	-58.0...OHS	°C/°F	-10.0	-10.0	-10.0	-10.0	-10.0	-10.0	-10.0	-10.0	-10.0

Note: the controller must be rebooted after changing **CnF** folder parameters.

Modbus MSK 756 functions and resources

Contents

This section includes the following topics:

Setting parameters via Modbus 216
Modbus table content 217
Table of Modbus Parameters 219
Folder Visibility Table 323
Table of Modbus Resources 327

Setting parameters via Modbus

Introduction

Modbus is a client/server protocol for communication between devices connected in a network. Modbus devices communicate using a client-server technique in which only one device (primary) can send messages. The other devices in the network (secondary) respond, returning the data requested by the primary device or executing the action contained in the message sent. A secondary device is a device connected to a network that processes information and sends the results to the primary device using the Modbus protocol.

The primary device can send messages to individual secondary devices, or to the entire network (broadcast), whilst secondary devices can only respond to messages individually and to the primary device. The Modbus standard used by Eliwell employs the RTU code for data transmission.

Data format (RTU)

The coding type used defines the structure of messages transmitted on the network and the way in which this information is deciphered. The coding type is usually chosen according to specific parameters (baudrate, parity, stop), plus certain devices only support specific coding types. Use the same coding type for all devices connected to a Modbus network.

The protocol uses the RTU binary method with the serial frame configured as follows:

- 8 bits for data
- parity bits NONE (configurable)

Parameters can be changed via:

- Device terminal
- UNICARD / DMI
- Send data via Modbus protocol directly to an individual device or in a broadcast using the address 0 (broadcast)

Modbus commands available and data areas

The following commands are implemented:

Modbus command	Description
03 (hex 0x03)	Read resources
16 (hex 0x10)	Write resources
43 (hex 0x2B)	Read device ID. The following 3 fields can be read: • 0 = Manufacturer ID • 1 = Model ID • 2 = Family ID (MSK 756) / device version

Note: Maximum length of transmitted/received messages equal to 50 bytes.

Address configuration

The **TTL** serial port may be used to configure the device, parameters, statuses, variables with Modbus using the Modbus protocol.

The address of a device within a Modbus message is set via parameter **Adr**.

The address **0** is used for broadcast messages that all secondary devices recognize. Secondary devices do not respond to a broadcast type request.

The device configuration parameters are as follows:

Parameter	Description
Adr	Modbus protocol controller address
bAU	Baudrate selection
Pty	Sets the Modbus protocol parity BIT. • **n** = parity bit NONE • **E** = parity bit EVEN • **o** = parity bit ODD

Note: Switch the controller off and on again after changing **Pty**.

Parameter values and visibility

Below are several notes relating to the value and visibility of the parameters.

Notes:

- Unless otherwise indicated, the parameter should be considered as visible and able to be changed unless the user applies custom settings via the serial port.
- If the visibility of the folder is changed all the parameters in that folder will assume the new setting.

Modbus table content

Introduction

The tables below contain the information required to access the resources properly.

There are 3 tables:

- **Modbus Parameters Table**: contains all the device configuration parameters including visibility
- **Folder Visibility Table**: contains the visibility of the folders containing the parameters
- **Modbus Resource Table**: contains all status (I/O) and alarm resources available in the volatile memory of the device.

Description of the columns

FOLDER
Indicates the name of the folder containing the parameter in question.

LABEL
Indicates the name with which the parameter appears in the menu.

DESCRIPTION
Description of the parameter's meaning.

VAL. PAR. ADDRESS
Represents the Modbus register address which contains the read or write value of the resource in the device.

VAL. FILTER
Represents the position of the most significant data bit inside the register. This information is always provided when the register contains more than one piece of information and it is necessary to distinguish which bits actually represent the data (the useful size of the data, indicated in the DATA SIZE column, should also be taken into account).

VIS. PAR. ADDRESS
Contains the Modbus register address which contains the visibility value of the resource to read or write in the device.

VIS. FILTER

Mask representing the position of the data inside the register (it has BITs set to 1 in correspondence with the register BITs effectively associated with the resource). It assumes values from 0 to 65535.

Note: in binary representation the least significant is furthest to the right.

Visibility:

- Value **3** = parameter or folder always visible
- Value **2** = manufacturer level; these parameters and folders are only visible when the manufacturer password (**PS2**) is entered (with this password you will be able to see all parameters declared as always visible; level **1** parameters will not be visible)
- Value **1** = installer level; these parameters and folders are only visible when the installer password (**PS1**) is entered (with this password you will be able to see all parameters declared as always visible; level **2** parameters will not be visible)
- Value **0** = parameter or folder NOT visible

Note: the size of the piece of visibility data is 2 BIT.

R/W
Indicates the option of reading or writing the resource:

- R = the resource is read-only
- W = the resource is write-only
- R/W = the resource can be both read and written

DATA SIZE
Indicates the size of the piece of data (in bit):

- WORD = 16 bit
- Byte = 8 bit
- “n” bit = 0...15 bit based on the value of “n”

CPL
When the field indicates **Y**, the value read by the register needs to be converted because the value represents a number with a sign. In the other cases the value is always positive or null.

To convert it, proceed as follows:

If the register value falls between...	Then the result is...
0 and 32767	the same value (zero and positive values).
32768 and 65535	the register value, from which to subtract 65536 (negative values).

RANGE
Describes the interval of values that can be assigned to the parameter. This range can be correlated to the value of other parameters.

MU
Unit of measure for the values.

Table of Modbus Parameters

Label	Description	Folder	Val. Par. Address	Val. Filter	Vis. Par. Address	Vis. Filter	R/W	Data Size	CPL	Range	MU
rE	Regulation type	CP	32892	0	38144	3	RW	Word	-	0...6	num
rP1	Thermostat regulation probe 1	CP	32893	0	38144	12	RW	Word	-	0...8	num
rP2	Thermostat regulation probe 2	CP	32894	0	38144	48	RW	Word	-	0...9	num
SP1	Regulation setpoint 1	CP	32895	0	38144	192	RW	Word	Y	LS1...HS1	°C/°F
dF1	Setpoint differential 1	CP	32896	0	38144	768	RW	Word	Y	-58.0...302	°C/°F
SP2	Regulation setpoint 2	CP	32897	0	38144	3072	RW	Word	Y	LS2...HS2	°C/°F
dF2	Setpoint differential 2	CP	32898	0	38144	12288	RW	Word	Y	-58.0...302	°C/°F
Stt	Differential management mode	CP	32901	0	38144	49152	RW	Word	-	0...1	flag
HS1	Maximum value that can be set for Setpoint 1	CP	32904	0	38145	3	RW	Word	Y	LS1...HdL	°C/°F
LS1	Minimum value that can be set for Setpoint 1	CP	32905	0	38145	12	RW	Word	Y	LdL...HS1	°C/°F
HS2	Maximum value that can be set for Setpoint 2	CP	32906	0	38145	48	RW	Word	Y	LS2...HdL	°C/°F
LS2	Minimum value that can be set for Setpoint 2	CP	32907	0	38145	192	RW	Word	Y	LdL...HS2	°C/°F
HC1	Setpoint 1 operating mode (Heating/Cooling)	CP	32902	0	38145	768	RW	Word	-	0...1	flag
HC2	Setpoint 2 operating mode (Heating/Cooling)	CP	32903	0	38145	3072	RW	Word	-	0...1	flag
Cit	Minimum compressor output activation time	CP	32912	0	38145	49152	RW	Word	-	0...250	min
CAt	Maximum compressor output activation time	CP	32913	0	38146	3	RW	Word	-	0...250	min
Ont	Compressor output ON time if regulation probe is faulty	CP	32918	0	38146	12	RW	Word	-	0...250	min
OFt	Compressor output OFF time if regulation probe is faulty	CP	32919	0	38146	48	RW	Word	-	0...250	min
dOn	Compressor output activation delay from call	CP	32914	0	38146	192	RW	Word	-	0...250	s
dOF	Compressor output activation delay from switch-off	CP	32915	0	38146	768	RW	Word	-	0...250	min
dbi	Delay between two consecutive compressor output power-ons	CP	32916	0	38146	3072	RW	Word	-	0...250	min
OdO	Output activation delay at startup	CP	32917	0	38146	12288	RW	Word	-	0...250	min
CFP	Condenser pre-ventilation time in Heat/Cool	CP	33001	0	38147	12	RW	Word	-	0...255	s
CFd	Condenser fan cut-out during defrosting.	CP	33002	0	38147	48	RW	Word	-	0...1	flag
OF1	Remote offset	CP	32923	0	38147	192	RW	Word	Y	-50.0...50.0	°C/°F
Pot	Pump down time	CP	33029	0	38178	192	RW	Word	-	0...250	s
SS1	Compressor softstart: advance hotgas valve opening	CP	33030	0	38178	768	RW	Word	-	0...250	s

Label	Description	Folder	Val. Par. Address	Val. Filter	Vis. Par. Address	Vis. Filter	R/W	Data Size	CPL	Range	MU
SS2	Compressor softstart: delay hotgas valve closing	CP	33031	0	38178	3072	RW	Word	-	0...250	s
dP1	Select defrost probe 1	dEF	32924	0	38147	768	RW	Word	-	0...8	num
dP2	Defrost probe 2 selection	dEF	32925	0	38147	3072	RW	Word	-	0...8	num
dty	Type of defrost	dEF	32928	0	38147	12288	RW	Word	-	0...4	num
dFt	Dual evaporator defrost activation mode	dEF	32926	0	38147	49152	RW	Word	-	0...2	num
dit	Interval between defrosts	dEF	32929	0	38148	3	RW	Word	-	0...250	hours
dt1	Unit of measure for defrost intervals	dEF	32932	0	38148	12	RW	Word	-	0...2	num
dt2	Unit of measure for defrost duration	dEF	32933	0	38148	48	RW	Word	-	0...2	num
dCt	Defrost interval count mode	dEF	32927	0	38148	192	RW	Word	-	0...5	num
dOH	Defrost cycle activation delay from the call	dEF	32934	0	38148	768	RW	Word	-	0...250	min
dE1	Evaporator 1 defrost maximum duration	dEF	32930	0	38148	3072	RW	Word	-	1...250	min
dE2	Evaporator 2 defrost maximum duration	dEF	32931	0	38148	12288	RW	Word	-	1...250	min
dS1	Evaporator 1 defrost end temperature	dEF	32936	0	38148	49152	RW	Word	Y	-58.0...302	°C/°F
dS2	Evaporator 2 defrost end temperature	dEF	32937	0	38149	3	RW	Word	Y	-58.0...302	°C/°F
dSS	Temperature threshold for starting defrost	dEF	32935	0	38149	12	RW	Word	Y	-58.0...302	°C/°F
dPO	Defrost activation request at power-on	dEF	32938	0	38149	48	RW	Word	-	0...1	flag
tCd	Compressor output activation/deactivation time before a defrost	dEF	32939	0	38149	192	RW	Word	Y	-60...60	min
ndE	minimum defrost duration time	dEF	32940	0	38149	768	RW	Word	-	0...250	min
PdC	Hot gas extraction time at the end of the defrost	dEF	32941	0	38149	3072	RW	Word	-	0...250	min
tPd	Pump down time before defrost start	dEF	32943	0	38149	12288	RW	Word	-	0...255	min
dPH	Regular defrost start hour	dEF	32882	0	38149	49152	RW	Word	-	0...24	hours
dPn	Regular defrost start minutes	dEF	32883	0	38150	3	RW	Word	-	0...59	min
dPd	Regular defrost interval duration	dEF	32884	0	38150	12	RW	Word	-	1...7	day
Fd1	1st weekend/holiday day	dEF	32831	0	38150	48	RW	Word	-	0...7	num
Fd2	2nd weekend/holiday day	dEF	32832	0	38150	192	RW	Word	-	0...7	num
Edt	Timeout and defrost end temperature specific to each event	dEF	32833	0	38150	768	RW	Word	-	0...1	num
Fdn	Weekday defrost number	dEF	32781	0	38184	3	RW	Word	-	0...250	num
FFn	Weekend/holiday defrost number	dEF	32782	0	38184	12	RW	Word	-	0...250	num
PrH	Basin heater pre-activation time	dEF	33038	0	38179	3072	RW	Word	-	0...255	min

Label	Description	Folder	Val. Par. Address	Val. Filter	Vis. Par. Address	Vis. Filter	R/W	Data Size	CPL	Range	MU
d1H	Weekday defrost no. 1 start hour	dEF	32834	0	38150	3072	RW	Word	-	0...24	hours
d1n	Weekday defrost no. 1 start minute	dEF	32835	0	38150	12288	RW	Word	-	0...59	min
d1t	1st weekday defrost duration	dEF	32836	0	38150	49152	RW	Word	-	0...250	min
d1S	1st weekday defrost end temperature	dEF	32837	0	38151	3	RW	Word	Y	-58.0...302	°C/°F
d2H	Weekday defrost no. 2 start hour	dEF	32838	0	38151	12	RW	Word	-	d1H...24	hours
d2n	Weekday defrost no. 2 start minutes	dEF	32839	0	38151	48	RW	Word	-	0...59	min
d2t	2nd weekday defrost duration	dEF	32840	0	38151	192	RW	Word	-	0...250	min
d2S	2nd weekday defrost end temperature	dEF	32841	0	38151	768	RW	Word	Y	-58.0...302	°C/°F
d3H	Weekday defrost no. 3 start hour	dEF	32842	0	38151	3072	RW	Word	-	d2H...24	hours
d3n	Weekday defrost no. 3 start minutes	dEF	32843	0	38151	12288	RW	Word	-	0...59	min
d3t	3rd weekday defrost duration	dEF	32844	0	38151	49152	RW	Word	-	0...250	min
d3S	3rd weekday defrost end temperature	dEF	32845	0	38152	3	RW	Word	Y	-58.0...302	°C/°F
d4H	Weekday defrost no. 4 start hour	dEF	32846	0	38152	12	RW	Word	-	d3H...24	hours
d4n	Weekday defrost no. 4 start minutes	dEF	32847	0	38152	48	RW	Word	-	0...59	min
d4t	4th weekday defrost duration	dEF	32848	0	38152	192	RW	Word	-	0...250	min
d4S	4th weekday defrost end temperature	dEF	32849	0	38152	768	RW	Word	Y	-58.0...302	°C/°F
d5H	Weekday defrost no. 5 start hour	dEF	32850	0	38152	3072	RW	Word	-	d4H...24	hours
d5n	Weekday defrost no. 5 start minutes	dEF	32851	0	38152	12288	RW	Word	-	0...59	min
d5t	5th weekday defrost duration	dEF	32852	0	38152	49152	RW	Word	-	0...250	min
d5S	5th weekday defrost end temperature	dEF	32853	0	38153	3	RW	Word	Y	-58.0...302	°C/°F
d6H	Weekday defrost no. 6 start hour	dEF	32854	0	38153	12	RW	Word	-	d5H...24	hours
d6n	Weekday defrost no. 6 start minutes	dEF	32855	0	38153	48	RW	Word	-	0...59	min
d6t	6th weekday defrost duration	dEF	32856	0	38153	192	RW	Word	-	0...250	min
d6S	6th weekday defrost end temperature	dEF	32857	0	38153	768	RW	Word	Y	-58.0...302	°C/°F
F1H	Weekend/holiday defrost no. 1 start hour	dEF	32858	0	38153	3072	RW	Word	-	0...24	hours
F1n	Weekend/holiday defrost no. 1 start minute	dEF	32859	0	38153	12288	RW	Word	-	0...59	min
F1t	1st weekend/holiday defrost duration	dEF	32860	0	38153	49152	RW	Word	-	0...250	min
F1S	1st weekend/holiday defrost end temperature	dEF	32861	0	38154	3	RW	Word	Y	-58.0...302	°C/°F
F2H	Weekend/holiday defrost no. 2 start hour	dEF	32862	0	38154	12	RW	Word	-	F1H...24	hours

Label	Description	Folder	Val. Par. Address	Val. Filter	Vis. Par. Address	Vis. Filter	R/W	Data Size	CPL	Range	MU
F2n	Weekend/holiday defrost no. 2 start minutes	dEF	32863	0	38154	48	RW	Word	-	0...59	min
F2t	2nd weekend/holiday defrost duration	dEF	32864	0	38154	192	RW	Word	-	0...250	min
F2S	2nd weekend/holiday defrost end temperature	dEF	32865	0	38154	768	RW	Word	Y	-58.0...302	°C/°F
F3H	Weekend/holiday defrost no. 3 start hour	dEF	32866	0	38154	3072	RW	Word	-	F2H...24	hours
F3n	Weekend/holiday defrost no. 3 start minutes	dEF	32867	0	38154	12288	RW	Word	-	0...59	min
F3t	3rd weekend/holiday defrost duration	dEF	32868	0	38154	49152	RW	Word	-	0...250	min
F3S	3rd weekend/holiday defrost end temperature	dEF	32869	0	38155	3	RW	Word	Y	-58.0...302	°C/°F
F4H	Weekend/holiday defrost no. 4 start hour	dEF	32870	0	38155	12	RW	Word	-	F3H...24	hours
F4n	Weekend/holiday defrost no. 4 start minutes	dEF	32871	0	38155	48	RW	Word	-	0...59	min
F4t	4th weekend/holiday defrost duration	dEF	32872	0	38155	192	RW	Word	-	0...250	min
F4S	4th weekend/holiday defrost end temperature	dEF	32873	0	38155	768	RW	Word	Y	-58.0...302	°C/°F
F5H	Weekend/holiday defrost no. 5 start hour	dEF	32874	0	38155	3072	RW	Word	-	F4H...24	hours
F5n	Weekend/holiday defrost no. 5 start minutes	dEF	32875	0	38155	12288	RW	Word	-	0...59	min
F5t	5th weekend/holiday defrost duration	dEF	32876	0	38155	49152	RW	Word	-	0...250	min
F5S	5th weekend/holiday defrost end temperature	dEF	32877	0	38156	3	RW	Word	Y	-58.0...302	°C/°F
F6H	Weekend/holiday defrost no. 6 start hour	dEF	32878	0	38156	12	RW	Word	-	F5H...24	hours
F6n	Weekend/holiday defrost no. 6 start minutes	dEF	32879	0	38156	48	RW	Word	-	0...59	min
F6t	6th weekend/holiday defrost duration	dEF	32880	0	38156	192	RW	Word	-	0...250	min
F6S	6th weekend/holiday defrost end temperature	dEF	32881	0	38156	768	RW	Word	Y	-58.0...302	°C/°F
FP1	Selection of evaporator fan probe in normal mode	Fan	32944	0	38156	3072	RW	Word	-	0...8	num
FP2	Selection of evaporator fan probe in defrost	Fan	32945	0	38156	12288	RW	Word	-	0...8	num
FPt	FSt parameter mode (absolute or relative)	Fan	32946	0	38156	49152	RW	Word	-	0...1	flag
FSt	Evaporator fan disabling temperature	Fan	32947	0	38157	3	RW	Word	Y	-58.0...302	°C/°F
FAd	Evaporator fan trigger differential	Fan	32948	0	38157	12	RW	Word	-	0.1...25.0	°C/°F
Fdt	Evaporator fan activation delay time after a defrost cycle	Fan	32949	0	38157	48	RW	Word	-	0...250	min

Label	Description	Folder	Val. Par. Address	Val. Filter	Vis. Par. Address	Vis. Filter	R/W	Data Size	CPL	Range	MU
dt	Dripping time	Fan	32954	0	38157	192	RW	Word	-	0...250	min
dFd	Evaporator fan cut-out during defrost	Fan	32952	0	38157	768	RW	Word	-	0...1	flag
FCO	Evaporator fan status with compressor output Off	Fan	32951	0	38157	3072	RW	Word	-	0...4	num
FOd	Evaporator fan status with door open	Fan	32953	0	38157	12288	RW	Word	-	0...1	flag
FdC	Evaporator fan shutoff delay after compressor deactivation	Fan	32950	0	38157	49152	RW	Word	-	0...250	min
FOn	Evaporator fan On time in cyclical regulator mode	Fan	32955	0	38158	3	RW	Word	-	0...250	min
FOF	Evaporator fan Off time in cyclical regulator mode	Fan	32956	0	38158	12	RW	Word	-	0...250	min
Fnn	Evaporator fan ON time in night mode (duty cycle)	Fan	32957	0	38158	48	RW	Word	-	0...250	min
FnF	Evaporator fan OFF time in night mode (duty cycle)	Fan	32958	0	38158	192	RW	Word	-	0...250	min
FE1	Variable speed fan probe selection	FE	33057	0	38182	48	RW	Word	-	0...12	num
FEt	Setpoint mode	FE	33058	0	38182	192	RW	Word	-	0...1	flag
FES	Setpoint	FE	33059	0	38182	768	RW	Word	Y	-58.0...302	°C/°F
FEd	Band	FE	33060	0	38182	3072	RW	Word	-	0.1...50.0	°C/°F
FEu	Cut-off band	FE	33061	0	38182	12288	RW	Word	-	0.0...25.0	°C/°F
FEC	Cut-off differential	FE	33062	0	38182	49152	RW	Word	-	0.1...25.0	°C/°F
FEr	Fan shutoff delay after compressor deactivation	FE	33063	0	38183	3	RW	Word	-	0...250	min
FE2	Minimum day percentage	FE	33064	0	38183	12	RW	Word	-	0...100	%
FE3	Maximum day percentage with compressor on	FE	33065	0	38183	48	RW	Word	-	0...100	%
FE4	Maximum day percentage with compressor off	FE	33066	0	38183	192	RW	Word	-	0...100	%
FE5	Minimum night percentage	FE	33067	0	38183	768	RW	Word	-	0...100	%
FE6	Maximum night percentage with compressor on	FE	33068	0	38183	3072	RW	Word	-	0...100	%
FE7	Maximum night percentage with compressor off	FE	33069	0	38183	12288	RW	Word	-	0...100	%
FE8	Percentage during defrost	FE	33070	0	38183	49152	RW	Word	-	0...100	%
FE9	Percentage in the event of probe error	FE	33071	0	38195	12	RW	Word	-	0...100	%
FEA	Maximum pick-up speed	FE	33072	0	38195	48	RW	Word	-	0...100	%
FEb	Fan pick-up time	FE	33073	0	38195	192	RW	Word	-	0...250	s
FEP	Fan forcing period at pick-up speed	FE	33074	0	38195	768	RW	Word	-	0...250	min
rA1	Temperature alarm probe 1 selection	AL	32972	0	38158	768	RW	Word	-	0...7	num

Label	Description	Folder	Val. Par. Address	Val. Filter	Vis. Par. Address	Vis. Filter	R/W	Data Size	CPL	Range	MU
rA2	Temperature alarm probe 2 selection	AL	32973	0	38158	3072	RW	Word	-	0...7	num
Att	Alarm mode (absolute or relative)	AL	32974	0	38158	12288	RW	Word	-	0...1	flag
AFd	Alarm activation differential	AL	32975	0	38158	49152	RW	Word	-	0.1...25.0	°C/°F
HA1	Maximum alarm 1 threshold	AL	32976	0	38159	3	RW	Word	Y	LA1...302	°C/°F
LA1	Minimum alarm 1 threshold	AL	32977	0	38159	12	RW	Word	Y	-58.0...HA1	°C/°F
HA2	Maximum alarm 2 threshold	AL	32978	0	38159	48	RW	Word	Y	LA2...302	°C/°F
LA2	Minimum alarm 2 threshold	AL	32979	0	38159	192	RW	Word	Y	-58.0...HA2	°C/°F
PAO	Temperature alarm exclusion time from power-on	AL	32980	0	38159	768	RW	Word	-	0...10	hours
dAO	Exclusion time for temperature alarms after a defrost cycle	AL	32982	0	38159	3072	RW	Word	-	0...250	min
OAO	High and low temperature alarms exclusion time after closing the door	AL	32981	0	38159	12288	RW	Word	-	0...10	hours
tdO	Door open alarm exclusion time	AL	33026	0	38159	49152	RW	Word	-	0...250	min
tA1	Probe 1 High/Minimum Alarm Delay	AL	32983	0	38160	3	RW	Word	-	0...250	min
tA2	Probe 2 High/Minimum Alarm Delay	AL	32984	0	38160	12	RW	Word	-	0...250	min
dAt	Defrost ended due to timeout alarm signaling	AL	32942	0	38160	48	RW	Word	-	0...1	flag
EAL	Regulators inhibited by external alarm	AL	32986	0	38160	192	RW	Word	-	0...2	num
rA3	Sets the input used by the two thresholds alarm regulator	AL	33045	0	38180	12288	RW	Word	-	0...8	num
ALL	Low alarm threshold (warning)	AL	33046	0	38180	49152	RW	Word	-	0.0...ALH	num
ALH	High alarm threshold (alarm)	AL	33047	0	38181	3	RW	Word	-	ALL...100	num
dAL	2 thresholds alarm regulator differential	AL	33048	0	38181	12	RW	Word	-	0.1...100	°C/°F
AL1	Minimum persistence time above the ALL threshold due to alarm activation	AL	33049	0	38181	48	RW	Word	-	0...250	min
AL2	Minimum persistence time above the ALH threshold due to alarm activation	AL	33056	0	38182	12	RW	Word	-	0...250	min
tP	Enables alarm acknowledgment with any key	AL	33027	0	38160	768	RW	Word	-	0...1	flag
Art	Regular watchdog alarm activation period	AL	32971	0	38160	3072	RW	Word	-	0...250	min*10
ttA	Manage temperature alarms with door open.	AL	33093	0	38186	3072	RW	Word	-	0...1	flag
dSd	Enable light relay from door switch	Lit	32968	0	38160	12288	RW	Word	-	0...1	flag
dLt	Light relay off delay from door closure	Lit	32969	0	38160	49152	RW	Word	-	0...250	min

Label	Description	Folder	Val. Par. Address	Val. Filter	Vis. Par. Address	Vis. Filter	R/W	Data Size	CPL	Range	MU
OFL	Enable cold room lights off via key during the delay set in parameter dLt	Lit	32970	0	38161	3	RW	Word	-	0...1	flag
dOd	Enable utility shutoff upon door switch activation	Lit	32985	0	38161	12	RW	Word	-	0...3	num
dOA	Behavior forced by digital input	Lit	32987	0	38161	48	RW	Word	-	0...5	num
PEA	Enable forced behavior from door switch and/or external alarm.	Lit	32988	0	38161	192	RW	Word	-	0...3	num
dCO	Compressor activation delay from acknowledgment	Lit	32989	0	38161	768	RW	Word	-	0...250	min
dFO	Fan enabling delay from acknowledgment	Lit	32990	0	38161	3072	RW	Word	-	0...250	min
ASb	Instrument off active light/auxiliary digital input or key	Lit	33016	0	38161	12288	RW	Word	-	0...1	flag
L00	Shared probe	Lin	32768	0	38161	49152	RW	Word	-	0...7	num
L01	Distributed viewing (refers to secondary)	Lin	32769	0	38162	3	RW	Word	-	0...2	num
L02	Setpoint synchronization	Lin	32770	0	38162	12	RW	Word	-	0...1	flag
L03	Defrost synchronization	Lin	32771	0	38162	48	RW	Word	-	0...2	num
L04	Inhibit resources at the end of defrost	Lin	32772	0	38162	192	RW	Word	-	0...1	flag
L05	Stand-by synchronization	Lin	32773	0	38162	768	RW	Word	-	0...1	flag
L06	Lights synchronization	Lin	32774	0	38162	3072	RW	Word	-	0...1	flag
L07	Reduced set synchronization	Lin	32775	0	38162	12288	RW	Word	-	0...1	flag
L08	AUX synchronization	Lin	32776	0	38162	49152	RW	Word	-	0...1	flag
L09	Shared saturation probe	Lin	32777	0	38163	3	RW	Word	-	0...1	flag
L10	Resource unlocking timeout during synchronized defrosts	Lin	33028	0	38163	12	RW	Word	-	0...250	min
L11	Number of devices connected in Link2	Lin	32778	0	38180	48	RW	Word	-	0...8	num
L12	Alarm relay sharing in Link2	Lin	32779	0	38180	192	RW	Word	-	0...2	num
L13	Link2 serial frame configuration	Lin	33039	0	38179	12288	RW	Word	-	0...1	flag
L14	Force cool mode	Lin	33055	0	38182	3	RW	Word	-	0...1	flag
L15	Shared buzzer and alarm silenced via Link2	Lin	33035	0	38184	48	RW	Word	-	0...2	num
dcS	Deep cooling setpoint	dEC	32962	0	38163	768	RW	Word	Y	-58.0...302	°C/°F
tdc	Deep cooling duration	dEC	32963	0	38163	3072	RW	Word	-	0...250	min
dcc	Defrost delay after deep cooling	dEC	32964	0	38163	12288	RW	Word	-	0...250	min
ESt	Type of action for the Energy Saving function	EnS	32891	0	38163	49152	RW	Word	-	0...8	num
ESF	Night mode activation (Energy Saving)	EnS	32959	0	38164	3	RW	Word	-	0...1	flag
Cdt	Door closing time	EnS	32960	0	38164	12	RW	Word	-	0...255	min*10

Label	Description	Folder	Val. Par. Address	Val. Filter	Vis. Par. Address	Vis. Filter	R/W	Data Size	CPL	Range	MU
ESo	Low consumption mode disabling timeout (door switch)	EnS	32961	0	38164	48	RW	Word	-	0...10	num
OS1	Offset on setpoint 1	EnS	32908	0	38164	192	RW	Word	Y	-50.0...50.0	°C/°F
OS2	Offset on setpoint 2	EnS	32909	0	38164	768	RW	Word	Y	-50.0...50.0	°C/°F
Od1	Refrigerated cabinets energy saving offset 1	EnS	32910	0	38164	3072	RW	Word	Y	-50.0...50.0	°C/°F
Od2	Refrigerated cabinets energy saving offset 2	EnS	32911	0	38164	12288	RW	Word	Y	-50.0...50.0	°C/°F
dn1	Differential during energy saving mode 1	EnS	32899	0	38164	49152	RW	Word	Y	-58.0...302	°C/°F
dn2	Differential during energy saving mode 2	EnS	32900	0	38165	3	RW	Word	Y	-58.0...302	°C/°F
EdH	Weekday energy saving start hour	EnS	32885	0	38165	12	RW	Word	-	0...24	hours
Edn	Weekday energy saving start minutes	EnS	32886	0	38165	48	RW	Word	-	0...59	min
Edd	Weekday energy saving duration	EnS	32887	0	38165	192	RW	Word	-	1...72	hours
EFH	Weekend/holiday energy saving start hour	EnS	32888	0	38165	768	RW	Word	-	0...24	hours
EFn	Weekend/holiday energy saving start minutes	EnS	32889	0	38165	3072	RW	Word	-	0...59	min
EFd	Weekend/holiday energy saving duration	EnS	32890	0	38165	12288	RW	Word	-	1...72	hours
FH	Frame heater probe selection	FrH	32991	0	38165	49152	RW	Word	-	0...9	num
FHt	Frame heater period	FrH	32993	0	38166	3	RW	Word	-	1...250	s*10
FH0	Frame heater set	FrH	32994	0	38166	12	RW	Word	Y	-58.0...302	°C/°F
FH1	Frame heater offset	FrH	32995	0	38166	48	RW	Word	-	0...25.0	°C/°F
FH2	Frame heater band	FrH	32996	0	38166	192	RW	Word	Y	-58.0...302	°C/°F
FH3	Frame heater minimum percentage/duty-cycle	FrH	32997	0	38166	768	RW	Word	-	0...100	%
FH4	Frame heater maximum percentage/day duty-cycle	FrH	32998	0	38166	3072	RW	Word	-	0...100	%
FH5	Frame heater maximum percentage/night duty-cycle	FrH	32999	0	38166	12288	RW	Word	-	0...100	%
FH6	Frame heater percentage/duty-cycle in defrost	FrH	33000	0	38166	49152	RW	Word	-	0...100	%
Adr	Modbus protocol controller address	Add	33157	0	38241	48	RW	Word	-	1...250	num
bAU	Baudrate selection	Add	33152	0	38241	192	RW	Word	-	0...2	num
Pty	MODBUS parity bit	Add	33154	0	38241	768	RW	Word	-	0...2	num
LOC	Disable terminal	diS	33003	0	38167	3	RW	Word	-	0...1	flag
PS1	Password 1 value	diS	33004	0	38167	12	RW	Word	-	0...250	num
PS2	Password 2 value	diS	33005	0	38167	48	RW	Word	-	0...250	num
ndt	Display with decimal point	diS	33006	0	38167	192	RW	Word	-	0...1	flag
CA1	Analog input 1 calibration	diS	32812	0	38167	768	RW	Word	Y	-30.0...30.0	°C/°F
CA2	Analog input 2 calibration	diS	32813	0	38167	3072	RW	Word	Y	-30.0...30.0	°C/°F

Label	Description	Folder	Val. Par. Address	Val. Filter	Vis. Par. Address	Vis. Filter	R/W	Data Size	CPL	Range	MU
CA3	Analog input 3 calibration	diS	32814	0	38167	12288	RW	Word	Y	-30.0...30.0	°C/°F
CA4	Analog input 4 calibration	diS	32815	0	38167	49152	RW	Word	Y	-30.0...30.0	°C/°F
CA5	Analog input 5 calibration	diS	32816	0	38168	3	RW	Word	Y	-30.0...30.0	°C/°F
CA6	Analog input 6 calibration	diS	32817	0	38168	12	RW	Word	Y	-30.0...30.0	bar/psi
CA7	Analog input 7 calibration	diS	32818	0	38168	48	RW	Word	Y	-30.0...30.0	bar/psi
LdL	Minimum display value	diS	33007	0	38168	192	RW	Word	Y	-58.0...HdL	°C/°F
HdL	Maximum display value	diS	33008	0	38168	768	RW	Word	Y	LdL...302.0	°C/°F
ddL	Display lock mode during a defrost	diS	33009	0	38168	3072	RW	Word	-	0...2	num
Ldd	Display lock timeout from end of defrost	diS	33010	0	38168	12288	RW	Word	-	0...250	min
dro	Select °C / °F	diS	33011	0	38168	49152	RW	Word	-	0...1	flag
SbP	Pressure unit of measure	diS	33012	0	38169	3	RW	Word	-	0...1	flag
rEP	Displayed pressure relative or absolute	diS	33170	0	38250	3	RW	Word	-	0...1	flag
ddd	Select main display value	diS	33013	0	38169	12	RW	Word	-	0...8	num
ddE	Resource displayed on ECHO	diS	33014	0	38169	48	RW	Word	-	0...11	num
rPH	Select HACCP probe	HCP	32965	0	38169	192	RW	Word	-	0...5	num
trA	Select ratiometric probe type	CnF	33163	0	38241	3072	RW	Word	-	0...8	num
H00	Select analog input type NTC/PTC/Pt1000	CnF	32780	0	38169	768	RW	Word	-	0...2	num
H02	Function activation time from terminal	CnF	33015	0	38169	3072	RW	Word	-	0...250	s
H03	Current input lower limit	CnF	33164	0	38241	12288	RW	Word	Y	-1...H04	bar
H04	Current input upper limit	CnF	33165	0	38241	49152	RW	Word	Y	H03...150	bar
H05	Ratiometric probe lower limit	CnF	33166	0	38242	3	RW	Word	Y	-1...H06	bar
H06	Ratiometric probe upper limit	CnF	33167	0	38242	12	RW	Word	Y	H05...150	bar
08L	Analog input 8 lower limit	CnF	33195	0	38250	49152	RW	Word	-	0...08H	num
08H	Analog input 8 upper limit	CnF	33196	0	38251	3	RW	Word	-	08L...100	num
08P	Keyboard probe prescaler	CnF	33197	0	38251	12	RW	Word	-	0...2	num
08U	Keyboard probe measurement unit	CnF	33200	0	38251	768	RW	Word	-	0...5	num
H08	Stand-by operating mode	CnF	33017	0	38169	12288	RW	Word	-	0...2	num
H11	Digital input 1 configurability and polarity	CnF	32783	0	38169	49152	RW	Word	Y	-19...19	num
H12	Digital input 2 configurability and polarity	CnF	32784	0	38170	3	RW	Word	Y	-19...19	num
H13	Digital input 3 configurability and polarity	CnF	32785	0	38170	12	RW	Word	Y	-19...19	num

Label	Description	Folder	Val. Par. Address	Val. Filter	Vis. Par. Address	Vis. Filter	R/W	Data Size	CPL	Range	MU
H14	Digital input 4 configurability and polarity	CnF	32786	0	38170	48	RW	Word	Y	-19...19	num
H15	Digital input 5 configurability and polarity	CnF	32787	0	38170	192	RW	Word	Y	-19...19	num
H16	Digital input 6 configurability and polarity	CnF	32788	0	38170	768	RW	Word	Y	-19...19	num
H17	Digital input 7 configurability and polarity	CnF	32789	0	38170	3072	RW	Word	Y	-19...19	num
H18	Digital input 8 configurability and polarity	CnF	32790	0	38170	12288	RW	Word	Y	-19...19	num
i01	Digital input 9 configurability and polarity	CnF	33050	0	38181	192	RW	Word	Y	-19...19	num
i02	Digital input 10 configurability and polarity	CnF	33051	0	38181	768	RW	Word	Y	-19...19	num
dti	Digital inputs 1 and 2 delay unit of measure	CnF	32799	0	38170	49152	RW	Word	-	0...1	flag
d11	D.I. 1 activation indication delay time	CnF	32791	0	38171	3	RW	Word	-	0...255	min
d12	D.I. 2 activation indication delay time	CnF	32792	0	38171	12	RW	Word	-	0...255	min
d13	D.I. 3 activation indication delay time	CnF	32793	0	38171	48	RW	Word	-	0...255	min
d14	D.I. 4 activation indication delay time	CnF	32794	0	38171	192	RW	Word	-	0...255	min
d15	D.I. 5 activation indication delay time	CnF	32795	0	38171	768	RW	Word	-	0...255	min
d16	D.I. 6 activation indication delay time	CnF	32796	0	38171	3072	RW	Word	-	0...255	min
d17	D.I. 7 activation indication delay time	CnF	32797	0	38171	12288	RW	Word	-	0...255	min
d18	D.I. 8 activation indication delay time	CnF	32798	0	38171	49152	RW	Word	-	0...255	min
01i	D.I. 9 activation indication delay time	CnF	33052	0	38181	3072	RW	Word	-	0...255	min
02i	D.I. 10 activation indication delay time	CnF	33053	0	38181	12288	RW	Word	-	0...255	min
H21	Configurability of digital output 1	CnF	32820	0	38172	3	RW	Word	-	0...19	num
H22	Configurability of digital output 2	CnF	32821	0	38172	12	RW	Word	-	0...19	num
H23	Configurability of digital output 3	CnF	32822	0	38172	48	RW	Word	-	0...19	num
H24	Configurability of digital output 4	CnF	32823	0	38172	192	RW	Word	-	0...19	num
H25	Configurability of digital output 5	CnF	32824	0	38172	768	RW	Word	-	0...19	num
H27	Configurability of digital output 7	CnF	32826	0	38172	12288	RW	Word	-	0...19	num
H29	Enable buzzer	CnF	32827	0	38172	49152	RW	Word	-	0...1	flag
d01	Configurability of digital output 8	CnF	33043	0	38180	768	RW	Word	-	0...19	num
d02	Configurability of digital output 9	CnF	33044	0	38180	3072	RW	Word	-	0...19	num

Label	Description	Folder	Val. Par. Address	Val. Filter	Vis. Par. Address	Vis. Filter	R/W	Data Size	CPL	Range	MU
H31	Configurability of the UP key	CnF	33018	0	38173	3	RW	Word	-	0...9	num
H32	Configurability of the DOWN key	CnF	33019	0	38173	12	RW	Word	-	0...9	num
H33	Configurability of the ESC key	CnF	33020	0	38173	48	RW	Word	-	0...9	num
H34	Configurability of the Free 1 key	CnF	33021	0	38173	192	RW	Word	-	0...9	num
H35	Configurability of the Free 2 key	CnF	33022	0	38173	768	RW	Word	-	0...9	num
H36	Configurability of the Free 3 key	CnF	33023	0	38173	3072	RW	Word	-	0...9	num
H37	Configurability of the Free 4 key	CnF	33024	0	38173	12288	RW	Word	-	0...9	num
H41	Configurability of analog input 1	CnF	32800	0	38173	49152	RW	Word	-	0...2	num
H42	Configurability of analog input 2	CnF	32801	0	38174	3	RW	Word	-	0...2	num
H43	Configurability of analog input 3	CnF	32802	0	38174	12	RW	Word	-	0...2	num
H44	Configurability of analog input 4	CnF	32803	0	38174	48	RW	Word	-	0...2	num
H45	Configurability of analog input 5	CnF	32804	0	38174	192	RW	Word	-	0...2	num
H46	Configurability of analog input 6	CnF	32805	0	38174	768	RW	Word	-	0...2	num
H47	Configurability of analog input 7	CnF	32806	0	38174	3072	RW	Word	-	0...2	num
H48	Configurability of analog input 8	CnF	33054	0	38181	49152	RW	Word	-	0...2	num
H50	Configurability of analog output 1	CnF	32828	0	38174	12288	RW	Word	-	0...1	flag
H51	Function associated with analog output	CnF	32829	0	38174	49152	RW	Word	-	0...3	num
H60	Parameter vector selector	CnF	33158	0	38242	48	R	Word	-	0...8	num
H68	RTC present	CnF	32830	0	38175	3	RW	Word	-	0...1	flag
H70	Selection of 1st sensor for virtual probe	CnF	32808	0	38175	12	RW	Word	-	0...5	num
H71	Selection of 2nd sensor for virtual probe	CnF	32809	0	38175	48	RW	Word	-	0...5	num
H72	Day virtual probe calculation %	CnF	32810	0	38175	192	RW	Word	-	0...100	%
H73	Night virtual probe calculation %	CnF	32811	0	38175	768	RW	Word	-	0...100	%
H74	Selection of 1st sensor for filtered virtual probe	CnF	33040	0	38179	49152	RW	Word	-	0...6	num
H75	Percentage in thousandths of the incoming signal for filtered virtual probe	CnF	33041	0	38180	3	RW	Word	-	1...1000	num
H76	Filtered virtual probe offset	CnF	33042	0	38180	12	RW	Word	Y	-999.9...999.9	num
EtY	Selection of electronic expansion valve driver	EE0	33025	0	38175	3072	RW	Word	-	0...1	flag
rSP	Select saturation probe	EE0	33280	0	38242	192	RW	Word	-	0...4	num
rSS	Select superheat probe valve 1	EE0	33281	0	38242	768	RW	Word	-	0...5	num
rbu	Select backup saturation probe	EE0	33282	0	38242	3072	RW	Word	-	0...2	num

Label	Description	Folder	Val. Par. Address	Val. Filter	Vis. Par. Address	Vis. Filter	R/W	Data Size	CPL	Range	MU
EPd	View temperature/pressure saturation value	EE0	33284	0	38242	12288	RW	Word	-	0...1	flag
Ert	Select type of refrigerant	EE0	33285	0	38242	49152	RW	Word	-	0...18	num
U02	Maximum valve opening percentage	EE0	33287	0	38243	12	RW	Word	-	0...100	%
U05	Operating time at max opening for alarm signaling	EE0	33290	0	38243	768	RW	Word	-	0...255	min
U06	Minimum useful valve opening percentage	EE0	33291	0	38243	3072	RW	Word	-	0...100	%
U07	Maximum useful valve opening percentage	EE0	33292	0	38243	12288	RW	Word	-	0...100	%
U08	Valve opening percentage during probe error	EE0	33293	0	38243	49152	RW	Word	-	0...100	%
U09	Minimum time needed to evaluate predictive filter parameters	EE0	33288	0	38243	48	RW	Word	-	0.0...3276.7	s
U10	Expired time predictive filter parameters	EE0	33289	0	38243	192	RW	Word	-	0...32767	s
U11	Minimum superheat temperature speed	EE0	33294	0	38244	3	RW	Word	-	-999.9...999.9	°C/s
U12	Minimum superheat to consider the evaporator empty	EE0	33295	0	38244	12	RW	Word	-	0...999,9	°C/°F
U13	Observation time for parameter recalculation	EE0	33296	0	38244	48	RW	Word	-	0...3600	s
U14	Superheat minimum transit band	EE0	33297	0	38244	192	RW	Word	-	0...U15	°C/°F
U15	Maximum superheat pass band	EE0	33298	0	38244	768	RW	Word	-	0.0...999.9	°C/°F
U16	Default superheat pass band	EE0	33299	0	38244	3072	RW	Word	-	0.0...999.9	°C/°F
U17	Upper threshold multiplier continuum modulation	EE0	33300	0	38244	12288	RW	Word	-	0.0...999.9	num
U18	Lower threshold multiplier continuum modulation	EE0	33301	0	38244	49152	RW	Word	-	0.0...999.9	num
U20	Continuous modulation differential gain	EE0	33304	0	38245	48	RW	Word	-	0...999.9	num
U21	Maximum valve open speed	EE0	33305	0	38245	192	RW	Word	-	0.0...999.9	%/s
U22	Enable saturation probe fixed value in case of error	EE0	33306	0	38245	768	RW	Word	-	0...1	num
U23	Saturation probe fixed value in case of error	EE0	33307	0	38245	3072	RW	Word	Y	-999.9...999.9	°C/°F
U25	Selection of loads to be disabled with faulty compressor	EE0	33310	0	38246	3	RW	Word	-	0...15	%
U26	Saturation temperature threshold for faulty compressor detection	EE0	33311	0	38246	12	RW	Word	Y	-999.9...999.9	°C/°F
U27	Minimum valve opening percentage	EE0	33312	0	38246	48	RW	Word	-	0.0...100	%
U51	Superheat filter coefficient	EE0	33283	0	38246	192	RW	Word	-	0...999	%
U52	Superheat offset integral time	EE0	33313	0	38246	768	RW	Word	-	0...999	s

Label	Description	Folder	Val. Par. Address	Val. Filter	Vis. Par. Address	Vis. Filter	R/W	Data Size	CPL	Range	MU
U53	Pump out time	EE0	33314	0	38246	3072	RW	Word	-	0...600	s
U54	Pump in time	EE0	33315	0	38246	12288	RW	Word	-	0...600	s
U55	Pump out/in period	EE0	33316	0	38246	49152	RW	Word	-	0...900	s*10
U56	AUG band.	EE0	33317	0	38247	3	RW	Word	-	0.0...10.0	°C/°F
U57	Superheat offset maximum value.	EE0	33318	0	38247	12	RW	Word	-	0.0...10.0	°C/°F
U58	Sets if the controller consider also air temperature.	EE0	33319	0	38247	12288	RW	Word	-	0/1	flag
U60	Minimum superheat filter threshold	EE0	33326	0	38248	12	RW	Word	Y	-99.9...0.0	°C/°F
U61	Maximum superheat filter threshold	EE0	33327	0	38248	48	RW	Word	-	0.0...99.9	°C/°F
U64	Minimum superheat percentage - forced mode	EE0	33330	0	38248	3072	RW	Word	-	0...100	%
U65	Activation time of minimum superheat percentage	EE0	33331	0	38248	12288	RW	Word	-	0...999	s
U66	Selects the superheat regulation algorithm	EE0	33332	0	38248	49152	RW	Word	-	0/1	flag
U67	Superheat lower threshold	EE0	33333	0	38249	3	RW	Word	Y	-99.9...OLt	°C/°F
U68	Time spent under the superheat lower threshold	EE0	33334	0	38249	12	RW	Word	-	0...600	s
OLt	Minimum superheat threshold	EE0	33302	0	38245	3	RW	Word	-	0...999.9	°C/°F
A_F	Select PID automatic or manual mode valve 1	EE0	10287	0	38250	12	RW	Word	-	0...1	flag
dUt	PID duty cycle in manual mode valve 1	EE0	10288	0	38250	48	RW	Word	-	0...100	%
HOE	Enable MOP	EE0	33320	0	38247	48	RW	Word	-	0...1	flag
tAP	Min. time max. temp threshold exceeded due to alarm activation	EE0	33321	0	38247	192	RW	Word	-	0...255	min
Hot	Maximum evaporator temperature threshold	EE0	33322	0	38247	768	RW	Word	Y	-999.9...999.9	°C/°F
HdP	MOP disable duration at startup	EE0	33323	0	38247	3072	RW	Word	-	0...999	min
HPd	MOP proportional band.	EE0	33325	0	38247	49152	RW	Word	-	0.1...999.9	K
UL	Visibility of parameter transfer function (Device -> UNICARD/MFK)	FPr	-	-	38178	3	RW	Word	-	0...3	num
dL	Visibility of parameter transfer function (UNICARD/MFK -> Device)	FPr	-	-	38178	12	RW	Word	-	0...3	num
Fr	Visibility of UNICARD/MFK formatting function	FPr	-	-	38178	48	RW	Word	-	0...3	num
OHP	Selection of oil temperature probe	OiL	33032	0	38178	12288	RW	Word	-	0...8	num
OSP	Oil heater setpoint	OiL	33033	0	38178	49152	RW	Word	Y	OLS...OHS	°C/°F
OHd	Oil heater differential	OiL	33034	0	38179	3	RW	Word	-	0.1...25.0	°C/°F
OHS	Maximum oil heater setpoint value that can be set	OiL	33036	0	38179	48	RW	Word	Y	OLS...302.0	°C/°F

Label	Description	Folder	Val. Par. Address	Val. Filter	Vis. Par. Address	Vis. Filter	R/W	Data Size	CPL	Range	MU
OLS	Minimum oil heater setpoint value that can be set	OiL	33037	0	38179	192	RW	Word	Y	-58.0...OHS	°C/°F
Application 1 parameters											
V1-rE	Regulation type	V1	34428	0	38272	3	RW	Word	-	0...6	num
V1-rP1	Thermostat regulation probe 1	V1	34429	0	38272	12	RW	Word	-	0...8	num
V1-rP2	Thermostat regulation probe 2	V1	34430	0	38272	48	RW	Word	-	0...9	num
V1-SP1	Regulation setpoint 1	V1	34431	0	38272	192	RW	Word	Y	V1-LS1...V1-HS1	°C/°F
V1-dF1	Setpoint differential 1	V1	34432	0	38272	768	RW	Word	Y	-58.0...302	°C/°F
V1-SP2	Regulation setpoint 2	V1	34433	0	38272	3072	RW	Word	Y	V1-LS2...V1-HS2	°C/°F
V1-dF2	Setpoint differential 2	V1	34434	0	38272	12288	RW	Word	Y	-58.0...302	°C/°F
V1-Stt	Differential management mode	V1	34437	0	38272	49152	RW	Word	-	0...1	flag
V1-HS1	Maximum value that can be set for Setpoint 1	V1	34440	0	38273	3	RW	Word	Y	V1-LS1...V1-HdL	°C/°F
V1-LS1	Minimum value that can be set for Setpoint 1	V1	34441	0	38273	12	RW	Word	Y	V1-LdL...V1-HS1	°C/°F
V1-HS2	Maximum value that can be set for Setpoint 2	V1	34442	0	38273	48	RW	Word	Y	V1-LS2...V1-HdL	°C/°F
V1-LS2	Minimum value that can be set for Setpoint 2	V1	34443	0	38273	192	RW	Word	Y	V1-LdL...V1-HS2	°C/°F
V1-HC1	Setpoint 1 operating mode (Heating/Cooling)	V1	34438	0	38273	768	RW	Word	-	0...1	flag
V1-HC2	Setpoint 2 operating mode (Heating/Cooling)	V1	34439	0	38273	3072	RW	Word	-	0...1	flag
V1-Cit	Minimum compressor output activation time	V1	34448	0	38273	49152	RW	Word	-	0...250	min
V1-CAt	Maximum compressor output activation time	V1	34449	0	38274	3	RW	Word	-	0...250	min
V1-Ont	Compressor output ON time if regulation probe is faulty	V1	34454	0	38274	12	RW	Word	-	0...250	min
V1-OFt	Compressor output OFF time if regulation probe is faulty	V1	34455	0	38274	48	RW	Word	-	0...250	min
V1-dOn	Compressor output activation delay from call	V1	34450	0	38274	192	RW	Word	-	0...250	s
V1-dOF	Compressor output activation delay from switch-off	V1	34451	0	38274	768	RW	Word	-	0...250	min
V1-dbi	Delay between two consecutive compressor output power-ons	V1	34452	0	38274	3072	RW	Word	-	0...250	min
V1-OdO	Output activation delay at startup	V1	34453	0	38274	12288	RW	Word	-	0...250	min
V1-CFP	Condenser pre-ventilation time in Heat/Cool	V1	34537	0	38275	12	RW	Word	-	0...255	s

Label	Description	Folder	Val. Par. Address	Val. Filter	Vis. Par. Address	Vis. Filter	R/W	Data Size	CPL	Range	MU
V1-CFd	Condenser fan cut-out during defrosting.	V1	34538	0	38275	48	RW	Word	-	0...1	flag
V1-OF1	Remote offset	V1	34459	0	38275	192	RW	Word	Y	-50.0...50.0	°C/°F
V1-Pot	Pump down time	V1	34565	0	38306	192	RW	Word	-	0...250	s
V1-SS1	Compressor softstart: advance hotgas valve opening	V1	34566	0	38306	768	RW	Word	-	0...250	s
V1-SS2	Compressor softstart: delay hotgas valve closing	V1	34567	0	38306	3072	RW	Word	-	0...250	s
V1-dP1	Select defrost probe 1	V1	34460	0	38275	768	RW	Word	-	0...8	num
V1-dP2	Defrost probe 2 selection	V1	34461	0	38275	3072	RW	Word	-	0...8	num
V1-dty	Type of defrost	V1	34464	0	38275	12288	RW	Word	-	0...4	num
V1-dFt	Dual evaporator defrost activation mode	V1	34462	0	38275	49152	RW	Word	-	0...2	num
V1-dit	Interval between defrosts	V1	34465	0	38276	3	RW	Word	-	0...250	hours
V1-dt1	Unit of measure for defrost intervals	V1	34468	0	38276	12	RW	Word	-	0...2	num
V1-dt2	Unit of measure for defrost duration	V1	34469	0	38276	48	RW	Word	-	0...2	num
V1-dCt	Defrost interval count mode	V1	34463	0	38276	192	RW	Word	-	0...5	num
V1-dOH	Defrost cycle activation delay from the call	V1	34470	0	38276	768	RW	Word	-	0...250	min
V1-dE1	Evaporator 1 defrost maximum duration	V1	34466	0	38276	3072	RW	Word	-	1...250	min
V1-dE2	Evaporator 2 defrost maximum duration	V1	34467	0	38276	12288	RW	Word	-	1...250	min
V1-dS1	Evaporator 1 defrost end temperature	V1	34472	0	38276	49152	RW	Word	Y	-58.0...302	°C/°F
V1-dS2	Evaporator 2 defrost end temperature	V1	34473	0	38277	3	RW	Word	Y	-58.0...302	°C/°F
V1-dSS	Temperature threshold for starting defrost	V1	34471	0	38277	12	RW	Word	Y	-58.0...302	°C/°F
V1-dPO	Defrost activation request at power-on	V1	34474	0	38277	48	RW	Word	-	0...1	flag
V1-tcd	Compressor output activation/deactivation time before a defrost	V1	34475	0	38277	192	RW	Word	Y	-60...60	min
V1-ndE	minimum defrost duration time	V1	34476	0	38277	768	RW	Word	-	0...250	min
V1-PdC	Hot gas extraction time at the end of the defrost	V1	34477	0	38277	3072	RW	Word	-	0...250	min
V1-tPd	Pump down time before defrost start	V1	34479	0	38277	12288	RW	Word	-	0...255	min
V1-dPH	Regular defrost start hour	V1	34418	0	38277	49152	RW	Word	-	0...24	hours
V1-dPn	Regular defrost start minutes	V1	34419	0	38278	3	RW	Word	-	0...59	min
V1-dPd	Regular defrost interval duration	V1	34420	0	38278	12	RW	Word	-	1...7	day
V1-Fd1	1st weekend/holiday day	V1	34367	0	38278	48	RW	Word	-	0...7	num
V1-Fd2	2nd weekend/holiday day	V1	34368	0	38278	192	RW	Word	-	0...7	num

Label	Description	Folder	Val. Par. Address	Val. Filter	Vis. Par. Address	Vis. Filter	R/W	Data Size	CPL	Range	MU
V1-Edt	Timeout and defrost end temperature specific to each event	V1	34369	0	38278	768	RW	Word	-	0...1	flag
V1-Fdn	Weekday defrost number	V1	34317	0	38312	3	RW	Word	-	0...250	num
V1-FFn	Weekend/holiday defrost number	V1	34318	0	38312	12	RW	Word	-	0...250	num
V1-PrH	Basin heater pre-activation time	V1	34574	0	38307	3072	RW	Word	-	0...255	min
V1-d1H	Weekday defrost no. 1 start hour	V1	34370	0	38278	3072	RW	Word	-	0...24	hours
V1-d1n	Weekday defrost no. 1 start minute	V1	34371	0	38278	12288	RW	Word	-	0...59	min
V1-d1t	1st weekday defrost duration	V1	34372	0	38278	49152	RW	Word	-	0...250	min
V1-d1S	1st weekday defrost end temperature	V1	34373	0	38279	3	RW	Word	Y	-58.0...302	°C/°F
V1-d2H	Weekday defrost no. 2 start hour	V1	34374	0	38279	12	RW	Word	-	V1-d1H...24	hours
V1-d2n	Weekday defrost no. 2 start minutes	V1	34375	0	38279	48	RW	Word	-	0...59	min
V1-d2t	2nd weekday defrost duration	V1	34376	0	38279	192	RW	Word	-	0...250	min
V1-d2S	2nd weekday defrost end temperature	V1	34377	0	38279	768	RW	Word	Y	-58.0...302	°C/°F
V1-d3H	Weekday defrost no. 3 start hour	V1	34378	0	38279	3072	RW	Word	-	V1-d2H...24	hours
V1-d3n	Weekday defrost no. 3 start minutes	V1	34379	0	38279	12288	RW	Word	-	0...59	min
V1-d3t	3rd weekday defrost duration	V1	34380	0	38279	49152	RW	Word	-	0...250	min
V1-d3S	3rd weekday defrost end temperature	V1	34381	0	38280	3	RW	Word	Y	-58.0...302	°C/°F
V1-d4H	Weekday defrost no. 4 start hour	V1	34382	0	38280	12	RW	Word	-	V1-d3H...24	hours
V1-d4n	Weekday defrost no. 4 start minutes	V1	34383	0	38280	48	RW	Word	-	0...59	min
V1-d4t	4th weekday defrost duration	V1	34384	0	38280	192	RW	Word	-	0...250	min
V1-d4S	4th weekday defrost end temperature	V1	34385	0	38280	768	RW	Word	Y	-58.0...302	°C/°F
V1-d5H	Weekday defrost no. 5 start hour	V1	34386	0	38280	3072	RW	Word	-	V1-d4H...24	hours
V1-d5n	Weekday defrost no. 5 start minutes	V1	34387	0	38280	12288	RW	Word	-	0...59	min
V1-d5t	5th weekday defrost duration	V1	34388	0	38280	49152	RW	Word	-	0...250	min
V1-d5S	5th weekday defrost end temperature	V1	34389	0	38281	3	RW	Word	Y	-58.0...302	°C/°F
V1-d6H	Weekday defrost no. 6 start hour	V1	34390	0	38281	12	RW	Word	-	V1-d5H...24	hours
V1-d6n	Weekday defrost no. 6 start minutes	V1	34391	0	38281	48	RW	Word	-	0...59	min
V1-d6t	6th weekday defrost duration	V1	34392	0	38281	192	RW	Word	-	0...250	min
V1-d6S	6th weekday defrost end temperature	V1	34393	0	38281	768	RW	Word	Y	-58.0...302	°C/°F
V1-F1H	Weekend/holiday defrost no. 1 start hour	V1	34394	0	38281	3072	RW	Word	-	0...24	hours

Label	Description	Folder	Val. Par. Address	Val. Filter	Vis. Par. Address	Vis. Filter	R/W	Data Size	CPL	Range	MU
V1-F1n	Weekend/holiday defrost no. 1 start minute	V1	34395	0	38281	12288	RW	Word	-	0...59	min
V1-F1t	1st weekend/holiday defrost duration	V1	34396	0	38281	49152	RW	Word	-	0...250	min
V1-F1S	1st weekend/holiday defrost end temperature	V1	34397	0	38282	3	RW	Word	Y	-58.0...302	°C/°F
V1-F2H	Weekend/holiday defrost no. 2 start hour	V1	34398	0	38282	12	RW	Word	-	V1-F1H...24	hours
V1-F2n	Weekend/holiday defrost no. 2 start minutes	V1	34399	0	38282	48	RW	Word	-	0...59	min
V1-F2t	2nd weekend/holiday defrost duration	V1	34400	0	38282	192	RW	Word	-	0...250	min
V1-F2S	2nd weekend/holiday defrost end temperature	V1	34401	0	38282	768	RW	Word	Y	-58.0...302	°C/°F
V1-F3H	Weekend/holiday defrost no. 3 start hour	V1	34402	0	38282	3072	RW	Word	-	V1-F2H...24	hours
V1-F3n	Weekend/holiday defrost no. 3 start minutes	V1	34403	0	38282	12288	RW	Word	-	0...59	min
V1-F3t	3rd weekend/holiday defrost duration	V1	34404	0	38282	49152	RW	Word	-	0...250	min
V1-F3S	3rd weekend/holiday defrost end temperature	V1	34405	0	38283	3	RW	Word	Y	-58.0...302	°C/°F
V1-F4H	Weekend/holiday defrost no. 4 start hour	V1	34406	0	38283	12	RW	Word	-	V1-F3H...24	hours
V1-F4n	Weekend/holiday defrost no. 4 start minutes	V1	34407	0	38283	48	RW	Word	-	0...59	min
V1-F4t	4th weekend/holiday defrost duration	V1	34408	0	38283	192	RW	Word	-	0...250	min
V1-F4S	4th weekend/holiday defrost end temperature	V1	34409	0	38283	768	RW	Word	Y	-58.0...302	°C/°F
V1-F5H	Weekend/holiday defrost no. 5 start hour	V1	34410	0	38283	3072	RW	Word	-	V1-F4H...24	hours
V1-F5n	Weekend/holiday defrost no. 5 start minutes	V1	34411	0	38283	12288	RW	Word	-	0...59	min
V1-F5t	5th weekend/holiday defrost duration	V1	34412	0	38283	49152	RW	Word	-	0...250	min
V1-F5S	5th weekend/holiday defrost end temperature	V1	34413	0	38284	3	RW	Word	Y	-58.0...302	°C/°F
V1-F6H	Weekend/holiday defrost no. 6 start hour	V1	34414	0	38284	12	RW	Word	-	V1-F5H...24	hours
V1-F6n	Weekend/holiday defrost no. 6 start minutes	V1	34415	0	38284	48	RW	Word	-	0...59	min
V1-F6t	6th weekend/holiday defrost duration	V1	34416	0	38284	192	RW	Word	-	0...250	min
V1-F6S	6th weekend/holiday defrost end temperature	V1	34417	0	38284	768	RW	Word	Y	-58.0...302	°C/°F
V1-FP1	Selection of evaporator fan probe in normal mode	V1	34480	0	38284	3072	RW	Word	-	0...7	num

Label	Description	Folder	Val. Par. Address	Val. Filter	Vis. Par. Address	Vis. Filter	R/W	Data Size	CPL	Range	MU
V1-FP2	Selection of evaporator fan probe in defrost	V1	34481	0	38284	12288	RW	Word	-	0...7	num
V1-FPt	FSt parameter mode (absolute or relative)	V1	34482	0	38284	49152	RW	Word	-	0...1	flag
V1-FSt	Evaporator fan disabling temperature	V1	34483	0	38285	3	RW	Word	Y	-58.0...302	°C/°F
V1-FAd	Evaporator fan trigger differential	V1	34484	0	38285	12	RW	Word	-	0.1...25.0	°C/°F
V1-Fdt	Evaporator fan activation delay time after a defrost cycle	V1	34485	0	38285	48	RW	Word	-	0...250	min
V1-dt	Dripping time	V1	34490	0	38285	192	RW	Word	-	0...250	min
V1-dFd	Evaporator fan cut-out during defrost	V1	34488	0	38285	768	RW	Word	-	0...1	flag
V1-FCO	Evaporator fan status with compressor output Off	V1	34487	0	38285	3072	RW	Word	-	0...4	num
V1-Fod	Evaporator fan status with door open	V1	34489	0	38285	12288	RW	Word	-	0...1	flag
V1-FdC	Evaporator fan shutoff delay after compressor deactivation	V1	34486	0	38285	49152	RW	Word	-	0...250	min
V1-FOn	Evaporator fan On time in cyclical regulator mode	V1	34491	0	38286	3	RW	Word	-	0...250	min
V1-FOF	Evaporator fan Off time in cyclical regulator mode	V1	34492	0	38286	12	RW	Word	-	0...250	min
V1-Fnn	Evaporator fan ON time in night mode (duty cycle)	V1	34493	0	38286	48	RW	Word	-	0...250	min
V1-FnF	Evaporator fan OFF time in night mode (duty cycle)	V1	34494	0	38286	192	RW	Word	-	0...250	min
V1-FE1	Variable speed fan probe selection	V1	34593	0	38310	48	RW	Word	-	0...12	num
V1-FEt	Setpoint mode	V1	34594	0	38310	192	RW	Word	-	0...1	flag
V1-FES	Setpoint	V1	34595	0	38310	768	RW	Word	Y	-58...302	°C/°F
V1-FEd	Band	V1	34596	0	38310	3072	RW	Word	-	0.1...50.0	°C/°F
V1-FEu	Cut-off band	V1	34597	0	38310	12288	RW	Word	-	0.0...25.0	°C/°F
V1-FEC	Cut-off differential	V1	34598	0	38310	49152	RW	Word	-	0.1...25.0	°C/°F
V1-FEr	Fan shutoff delay after compressor deactivation	V1	34599	0	38311	3	RW	Word	-	0...250	min
V1-FE2	Minimum day percentage	V1	34600	0	38311	12	RW	Word	-	0...100	%
V1-FE3	Maximum day percentage with compressor on	V1	34601	0	38311	48	RW	Word	-	0...100	%
V1-FE4	Maximum day percentage with compressor off	V1	34602	0	38311	192	RW	Word	-	0...100	%
V1-FE5	Minimum night percentage	V1	34603	0	38311	768	RW	Word	-	0...100	%
V1-FE6	Maximum night percentage with compressor on	V1	34604	0	38311	3072	RW	Word	-	0...100	%

Label	Description	Folder	Val. Par. Address	Val. Filter	Vis. Par. Address	Vis. Filter	R/W	Data Size	CPL	Range	MU
V1-FE7	Maximum night percentage with compressor off	V1	34605	0	38311	12288	RW	Word	-	0...100	%
V1-FE8	Percentage during defrost	V1	34606	0	38311	49152	RW	Word	-	0...100	%
V1-FE9	Percentage in the event of probe error	V1	34607	0	38323	12	RW	Word	-	0...100	%
V1-FEA	Maximum pick-up speed	V1	34608	0	38323	48	RW	Word	-	0...100	%
V1-FEb	Fan pick-up time	V1	34609	0	38323	192	RW	Word	-	0...250	s
V1-FEP	Fan forcing period at pick-up speed	V1	34610	0	38323	768	RW	Word	-	0...250	min
V1-rA1	Temperature alarm probe 1 selection	V1	34508	0	38286	768	RW	Word	-	0...7	num
V1-rA2	Temperature alarm probe 2 selection	V1	34509	0	38286	3072	RW	Word	-	0...7	num
V1-Att	Alarm mode (absolute or relative)	V1	34510	0	38286	12288	RW	Word	-	0...1	flag
V1-AFd	Alarm activation differential	V1	34511	0	38286	49152	RW	Word	-	0.1...25.0	°C/°F
V1-HA1	Maximum alarm 1 threshold	V1	34512	0	38287	3	RW	Word	Y	V1-LA1...302	°C/°F
V1-LA1	Minimum alarm 1 threshold	V1	34513	0	38287	12	RW	Word	Y	-58.0...V1-HA1	°C/°F
V1-HA2	Maximum alarm 2 threshold	V1	34514	0	38287	48	RW	Word	Y	V1-LA2...302	°C/°F
V1-LA2	Minimum alarm 2 threshold	V1	34515	0	38287	192	RW	Word	Y	-58.0...V1-HA2	°C/°F
V1-PAO	Temperature alarm exclusion time from power-on	V1	34516	0	38287	768	RW	Word	-	0...10	hours
V1-dAO	Exclusion time for temperature alarms after a defrost cycle	V1	34518	0	38287	3072	RW	Word	-	0...250	min
V1-OAO	High and low temperature alarms exclusion time after closing the door	V1	34517	0	38287	12288	RW	Word	-	0...10	hours
V1-tdO	Door open alarm exclusion time	V1	34562	0	38287	49152	RW	Word	-	0...250	min
V1-tA1	Probe 1 High/Minimum Alarm Delay	V1	34519	0	38288	3	RW	Word	-	0...250	min
V1-tA2	Probe 2 High/Minimum Alarm Delay	V1	34520	0	38288	12	RW	Word	-	0...250	min
V1-dAt	Defrost ended due to timeout alarm signaling	V1	34478	0	38288	48	RW	Word	-	0...1	flag
V1-EAL	Regulators inhibited by external alarm	V1	34522	0	38288	192	RW	Word	-	0...2	num
V1-rA3	Sets the input used by the two thresholds alarm regulator	V1	34581	0	38308	12288	RW	Word	-	0...8	num
V1-ALL	Low alarm threshold (warning)	V1	34582	0	38308	49152	RW	Word	-	0.0...V1-ALH	num
V1-ALH	High alarm threshold (alarm)	V1	34583	0	38309	3	RW	Word	-	V1-ALL...100	num
V1-dAL	2 thresholds alarm regulator differential	V1	34584	0	38309	12	RW	Word	-	0.1...100	°C/°F

Label	Description	Folder	Val. Par. Address	Val. Filter	Vis. Par. Address	Vis. Filter	R/W	Data Size	CPL	Range	MU
V1-AL1	Minimum persistence time above the ALL threshold due to alarm activation	V1	34585	0	38309	48	RW	Word	-	0...250	min
V1-AL2	Minimum persistence time above the ALH threshold due to alarm activation	V1	34592	0	38310	12	RW	Word	-	0...250	min
V1-tP	Enables alarm acknowledgment with any key	V1	34563	0	38288	768	RW	Word	-	0...1	flag
V1-Art	Regular watchdog alarm activation period	V1	34507	0	38288	3072	RW	Word	-	0...250	min*10
V1-ttA	Manage temperature alarms with door open.	V1	34611	0	38314	3072	RW	Word	-	0...1	flag
V1-dSd	Enable light relay from door switch	V1	34504	0	38288	12288	RW	Word	-	0...1	flag
V1-dLt	Light relay off delay from door closure	V1	34505	0	38288	49152	RW	Word	-	0...250	min
V1-OFL	Enable cold room lights off via key during the delay set in parameter dLt	V1	34506	0	38289	3	RW	Word	-	0...1	flag
V1-dOd	Enable utility shutoff upon door switch activation	V1	34521	0	38289	12	RW	Word	-	0...3	num
V1-dOA	Behavior forced by digital input	V1	34523	0	38289	48	RW	Word	-	0...5	num
V1-PEA	Enable forced behavior from door switch and/or external alarm.	V1	34524	0	38289	192	RW	Word	-	0...3	num
V1-dCO	Compressor activation delay from acknowledgment	V1	34525	0	38289	768	RW	Word	-	0...250	min
V1-dFO	Fan enabling delay from acknowledgment	V1	34526	0	38289	3072	RW	Word	-	0...250	min
V1-ASb	Instrument off active light/auxiliary digital input or key	V1	34552	0	38289	12288	RW	Word	-	0...1	flag
V1-L00	Shared probe	V1	34304	0	38289	49152	RW	Word	-	0...7	num
V1-L01	Distributed viewing (refers to secondary)	V1	34305	0	38290	3	RW	Word	-	0...2	num
V1-L02	Setpoint synchronization	V1	34306	0	38290	12	RW	Word	-	0...1	flag
V1-L03	Defrost synchronization	V1	34307	0	38290	48	RW	Word	-	0...2	num
V1-L04	Inhibit resources at the end of defrost	V1	34308	0	38290	192	RW	Word	-	0...1	flag
V1-L05	Stand-by synchronization	V1	34309	0	38290	768	RW	Word	-	0...1	flag
V1-L06	Lights synchronization	V1	34310	0	38290	3072	RW	Word	-	0...1	flag
V1-L07	Reduced set synchronization	V1	34311	0	38290	12288	RW	Word	-	0...1	flag
V1-L08	AUX synchronization	V1	34312	0	38290	49152	RW	Word	-	0...1	flag
V1-L09	Shared saturation probe	V1	34313	0	38291	3	RW	Word	-	0...1	flag
V1-L10	Resource unlocking timeout during synchronized defrosts	V1	34564	0	38291	12	RW	Word	-	0...250	min

Label	Description	Folder	Val. Par. Address	Val. Filter	Vis. Par. Address	Vis. Filter	R/W	Data Size	CPL	Range	MU
V1-L11	Number of devices connected in Link2	V1	34314	0	38308	48	RW	Word	-	0...8	num
V1-L12	Alarm relay sharing in Link2	V1	34315	0	38308	192	RW	Word	-	0...2	num
V1-L13	Link2 serial frame configuration	V1	34575	0	38307	12288	RW	Word	-	0...1	flag
V1-L14	Force cool mode	V1	34591	0	38310	3	RW	Word	-	0...1	flag
V1-L15	Shared buzzer and alarm silenced via Link2	V1	34571	0	38312	48	RW	Word	-	0...2	num
V1-dcS	Deep cooling setpoint	V1	34498	0	38291	768	RW	Word	Y	-58.0...302	°C/°F
V1-tdc	Deep cooling duration	V1	34499	0	38291	3072	RW	Word	-	0...250	min
V1-dcc	Defrost delay after deep cooling	V1	34500	0	38291	12288	RW	Word	-	0...250	min
V1-ESt	Type of action for the Energy Saving function	V1	34427	0	38291	49152	RW	Word	-	0...8	num
V1-ESF	Night mode activation (Energy Saving)	V1	34495	0	38292	3	RW	Word	-	0...1	flag
V1-Cdt	Door closing time	V1	34496	0	38292	12	RW	Word	-	0...255	min*10
V1-ESo	Low consumption mode disabling timeout (door switch)	V1	34497	0	38292	48	RW	Word	-	0...10	num
V1-OS1	Offset on setpoint 1	V1	34444	0	38292	192	RW	Word	Y	-50.0...50.0	°C/°F
V1-OS2	Offset on setpoint 2	V1	34445	0	38292	768	RW	Word	Y	-50.0...50.0	°C/°F
V1-Od1	Refrigerated cabinets energy saving offset 1	V1	34446	0	38292	3072	RW	Word	Y	-50.0...50.0	°C/°F
V1-Od2	Refrigerated cabinets energy saving offset 2	V1	34447	0	38292	12288	RW	Word	Y	-50.0...50.0	°C/°F
V1-dn1	Differential during energy saving mode 1	V1	34435	0	38292	49152	RW	Word	Y	-58.0...302	°C/°F
V1-dn2	Differential during energy saving mode 2	V1	34436	0	38293	3	RW	Word	Y	-58.0...302	°C/°F
V1-EdH	Weekday energy saving start hour	V1	34421	0	38293	12	RW	Word	-	0...24	hours
V1-Edn	Weekday energy saving start minutes	V1	34422	0	38293	48	RW	Word	-	0...59	min
V1-Edd	Weekday energy saving duration	V1	34423	0	38293	192	RW	Word	-	1...72	hours
V1-EFH	Weekend/holiday energy saving start hour	V1	34424	0	38293	768	RW	Word	-	0...24	hours
V1-EFn	Weekend/holiday energy saving start minutes	V1	34425	0	38293	3072	RW	Word	-	0...59	min
V1-EFd	Weekend/holiday energy saving duration	V1	34426	0	38293	12288	RW	Word	-	1...72	hours
V1-FH	Frame heater probe selection	V1	34527	0	38293	49152	RW	Word	-	0...9	num
V1-FHt	Frame heater period	V1	34529	0	38294	3	RW	Word	-	1...250	s
V1-FH0	Frame heater set	V1	34530	0	38294	12	RW	Word	Y	-58.0...302	°C/°F
V1-FH1	Frame heater offset	V1	34531	0	38294	48	RW	Word	-	0.0...25.0	°C/°F
V1-FH2	Frame heater band	V1	34532	0	38294	192	RW	Word	Y	-58.0...302	°C/°F

Label	Description	Folder	Val. Par. Address	Val. Filter	Vis. Par. Address	Vis. Filter	R/W	Data Size	CPL	Range	MU
V1-FH3	Frame heater minimum percentage/duty-cycle	V1	34533	0	38294	768	RW	Word	-	0...100	%
V1-FH4	Frame heater maximum percentage/day duty-cycle	V1	34534	0	38294	3072	RW	Word	-	0...100	%
V1-FH5	Frame heater maximum percentage/night duty-cycle	V1	34535	0	38294	12288	RW	Word	-	0...100	%
V1-FH6	Frame heater percentage/duty-cycle in defrost	V1	34536	0	38294	49152	RW	Word	-	0...100	%
V1-LOC	Disable terminal	V1	34539	0	38295	3	RW	Word	-	0...1	flag
V1-PS1	Password 1 value	V1	34540	0	38295	12	RW	Word	-	0...250	num
V1-PS2	Password 2 value	V1	34541	0	38295	48	RW	Word	-	0...250	num
V1-ndt	Display with decimal point	V1	34542	0	38295	192	RW	Word	-	0...1	flag
V1-CA1	Analog input 1 calibration	V1	34348	0	38295	768	RW	Word	Y	-30.0...30.0	°C/°F
V1-CA2	Analog input 2 calibration	V1	34349	0	38295	3072	RW	Word	Y	-30.0...30.0	°C/°F
V1-CA3	Analog input 3 calibration	V1	34350	0	38295	12288	RW	Word	Y	-30.0...30.0	°C/°F
V1-CA4	Analog input 4 calibration	V1	34351	0	38295	49152	RW	Word	Y	-30.0...30.0	°C/°F
V1-CA5	Analog input 5 calibration	V1	34352	0	38296	3	RW	Word	Y	-30.0...30.0	°C/°F
V1-CA6	Analog input 6 calibration	V1	34353	0	38296	12	RW	Word	Y	-30.0...30.0	bar/psi
V1-CA7	Analog input 7 calibration	V1	34354	0	38296	48	RW	Word	Y	-30.0...30.0	bar/psi
V1-LdL	Minimum display value	V1	34543	0	38296	192	RW	Word	Y	-58.0...V1-HdL	°C/°F
V1-HdL	Maximum display value	V1	34544	0	38296	768	RW	Word	Y	V1-LdL...302	°C/°F
V1-ddL	Display lock mode during a defrost	V1	34545	0	38296	3072	RW	Word	-	0...2	num
V1-Ldd	Display lock timeout from end of defrost	V1	34546	0	38296	12288	RW	Word	-	0...250	min
V1-dro	Select °C / °F	V1	34547	0	38296	49152	RW	Word	-	0...1	flag
V1-SbP	Pressure unit of measure	V1	34548	0	38297	3	RW	Word	-	0...1	flag
V1-ddd	Select main display value	V1	34549	0	38297	12	RW	Word	-	0...8	num
V1-ddE	Resource displayed on ECHO	V1	34550	0	38297	48	RW	Word	-	0...11	num
V1-rPH	Receiver maximum valve opening %	V1	34501	0	38297	192	RW	Word	-	0...5	num
V1-H00	Select analog input type NTC/PTC	V1	34316	0	38297	768	RW	Word	-	0...2	num
V1-H02	Function activation time from terminal	V1	34551	0	38297	3072	RW	Word	-	0...250	s
V1-H08	Stand-by operating mode	V1	34553	0	38297	12288	RW	Word	-	0...2	num
V1-H11	Digital input 1 configurability and polarity	V1	34319	0	38297	49152	RW	Word	Y	-19...19	num

Label	Description	Folder	Val. Par. Address	Val. Filter	Vis. Par. Address	Vis. Filter	R/W	Data Size	CPL	Range	MU
V1-H12	Digital input 2 configurability and polarity	V1	34320	0	38298	3	RW	Word	Y	-19...19	num
V1-H13	Digital input 3 configurability and polarity	V1	34321	0	38298	12	RW	Word	Y	-19...19	num
V1-H14	Digital input 4 configurability and polarity	V1	34322	0	38298	48	RW	Word	Y	-19...19	num
V1-H15	Digital input 5 configurability and polarity	V1	34323	0	38298	192	RW	Word	Y	-19...19	num
V1-H16	Digital input 6 configurability and polarity	V1	34324	0	38298	768	RW	Word	Y	-19...19	num
V1-H17	Digital input 7 configurability and polarity	V1	34325	0	38298	3072	RW	Word	Y	-19...19	num
V1-H18	Digital input 8 configurability and polarity	V1	34326	0	38298	12288	RW	Word	Y	-19...19	num
V1-i01	Digital input 9 configurability and polarity	V1	34586	0	38309	192	RW	Word	Y	-19...19	num
V1-i02	Digital input 10 configurability and polarity	V1	34587	0	38309	768	RW	Word	Y	-19...19	num
V1-dti	Digital inputs 1 and 2 delay unit of measure	V1	34335	0	38298	49152	RW	Word	-	0...1	flag
V1-d11	D.I. 1 activation indication delay time	V1	34327	0	38299	3	RW	Word	-	0...255	min
V1-d12	D.I. 2 activation indication delay time	V1	34328	0	38299	12	RW	Word	-	0...255	min
V1-d13	D.I. 3 activation indication delay time	V1	34329	0	38299	48	RW	Word	-	0...255	min
V1-d14	D.I. 4 activation indication delay time	V1	34330	0	38299	192	RW	Word	-	0...255	min
V1-d15	D.I. 5 activation indication delay time	V1	34331	0	38299	768	RW	Word	-	0...255	min
V1-d16	D.I. 6 activation indication delay time	V1	34332	0	38299	3072	RW	Word	-	0...255	min
V1-d17	D.I. 7 activation indication delay time	V1	34333	0	38299	12288	RW	Word	-	0...255	min
V1-d18	D.I. 8 activation indication delay time	V1	34334	0	38299	49152	RW	Word	-	0...255	min
V1-01i	D.I. 9 activation indication delay time	V1	34588	0	38309	3072	RW	Word	-	0...255	min
V1-02i	D.I. 10 activation indication delay time	V1	34589	0	38309	12288	RW	Word	-	0...255	min
V1-H21	Configurability of digital output 1	V1	34356	0	38300	3	RW	Word	-	0...19	num
V1-H22	Configurability of digital output 2	V1	34357	0	38300	12	RW	Word	-	0...19	num
V1-H23	Configurability of digital output 3	V1	34358	0	38300	48	RW	Word	-	0...19	num
V1-H24	Configurability of digital output 4	V1	34359	0	38300	192	RW	Word	-	0...19	num
V1-H25	Configurability of digital output 5	V1	34360	0	38300	768	RW	Word	-	0...19	num
V1-H27	Configurability of digital output 7	V1	34362	0	38300	12288	RW	Word	-	0...19	num

Label	Description	Folder	Val. Par. Address	Val. Filter	Vis. Par. Address	Vis. Filter	R/W	Data Size	CPL	Range	MU
V1-H29	Enable buzzer	V1	34363	0	38300	49152	RW	Word	-	0...1	num
V1-d01	Configurability of digital output 8	V1	34579	0	38308	768	RW	Word	-	0...19	num
V1-d02	Configurability of digital output 9	V1	34580	0	38308	3072	RW	Word	-	0...19	num
V1-H31	Configurability of the UP key	V1	34554	0	38301	3	RW	Word	-	0...9	num
V1-H32	Configurability of the DOWN key	V1	34555	0	38301	12	RW	Word	-	0...9	num
V1-H33	Configurability of the ESC key	V1	34556	0	38301	48	RW	Word	-	0...9	num
V1-H34	Configurability of the Free 1 key	V1	34557	0	38301	192	RW	Word	-	0...9	num
V1-H35	Configurability of the Free 2 key	V1	34558	0	38301	768	RW	Word	-	0...9	num
V1-H36	Configurability of the Free 3 key	V1	34559	0	38301	3072	RW	Word	-	0...9	num
V1-H37	Configurability of the Free 4 key	V1	34560	0	38301	12288	RW	Word	-	0...9	num
V1-H41	Configurability of analog input 1	V1	34336	0	38301	49152	RW	Word	-	0...2	num
V1-H42	Configurability of analog input 2	V1	34337	0	38302	3	RW	Word	-	0...2	num
V1-H43	Configurability of analog input 3	V1	34338	0	38302	12	RW	Word	-	0...2	num
V1-H44	Configurability of analog input 4	V1	34339	0	38302	48	RW	Word	-	0...2	num
V1-H45	Configurability of analog input 5	V1	34340	0	38302	192	RW	Word	-	0...2	num
V1-H46	Configurability of analog input 6	V1	34341	0	38302	768	RW	Word	-	0...2	num
V1-H47	Configurability of analog input 7	V1	34342	0	38302	3072	RW	Word	-	0...2	num
V1-H48	Configurability of analog input 8	V1	34590	0	38309	49152	RW	Word	-	0...2	num
V1-H50	Configurability of analog output 1	V1	34364	0	38302	12288	RW	Word	-	0...1	num
V1-H51	Function associated with analog output	V1	34365	0	38302	49152	RW	Word	-	0...3	num
V1-H68	RTC present	V1	34366	0	38303	3	RW	Word	-	0...1	num
V1-H70	Selection of 1st sensor for virtual probe	V1	34344	0	38303	12	RW	Word	-	0...5	num
V1-H71	Selection of 2nd sensor for virtual probe	V1	34345	0	38303	48	RW	Word	-	0...5	num
V1-H72	Day virtual probe calculation %	V1	34346	0	38303	192	RW	Word	-	0...100	%
V1-H73	Night virtual probe calculation %	V1	34347	0	38303	768	RW	Word	-	0...100	%
V1-H74	Selection of 1st sensor for filtered virtual probe	V1	34576	0	38307	49152	RW	Word	-	0...65635	num
V1-H75	Percentage in thousandths of the incoming signal for filtered virtual probe	V1	34577	0	38308	3	RW	Word	-	0...65635	num
V1-H76	Filtered virtual probe offset	V1	34578	0	38308	12	RW	Word	Y	0...65635	num
V1-EtY	Selection of electronic expansion valve driver	V1	34561	0	38303	3072	RW	Word	-	0...1	flag

Label	Description	Folder	Val. Par. Address	Val. Filter	Vis. Par. Address	Vis. Filter	R/W	Data Size	CPL	Range	MU
V1-UL	Visibility of parameter transfer function (Device -> UNICARD/MFK)	V1	-	-	38306	3	RW	Word	-	0...3	num
V1-dL	Visibility of parameter transfer function (UNICARD/MFK -> Device)	V1	-	-	38306	12	RW	Word	-	0...3	num
V1-Fr	Visibility of UNICARD/MFK formatting function	V1	-	-	38306	48	RW	Word	-	0...3	num
V1-OHP	Selection of oil temperature probe	V1	34568	0	38306	12288	RW	Word	-	0...8	num
V1-OSP	Oil heater setpoint	V1	34569	0	38306	49152	RW	Word	Y	V1-OLS...V1-OHS	°C/°F
V1-OHd	Oil heater differential	V1	34570	0	38307	3	RW	Word	-	0.1...25.0	°C/°F
V1-OHS	Maximum oil heater setpoint value that can be set	V1	34572	0	38307	48	RW	Word	Y	V1-OLS...302	°C/°F
V1-OLS	Minimum oil heater setpoint value that can be set	V1	34573	0	38307	192	RW	Word	Y	-58.0...V1-OHS	°C/°F
Application 2 parameters											
V2-rE	Regulation type	V2	34812	0	38368	3	RW	Word	-	0...6	num
V2-rP1	Thermostat regulation probe 1	V2	34813	0	38368	12	RW	Word	-	0...8	num
V2-rP2	Thermostat regulation probe 2	V2	34814	0	38368	48	RW	Word	-	0...9	num
V2-SP1	Regulation setpoint 1	V2	34815	0	38368	192	RW	Word	Y	V2-LS1...V2-HS1	°C/°F
V2-dF1	Setpoint differential 1	V2	34816	0	38368	768	RW	Word	Y	-58.0...302	°C/°F
V2-SP2	Regulation setpoint 2	V2	34817	0	38368	3072	RW	Word	Y	V2-LS2...V2-HS2	°C/°F
V2-dF2	Setpoint differential 2	V2	34818	0	38368	12288	RW	Word	Y	-58.0...302	°C/°F
V2-Stt	Differential management mode	V2	34821	0	38368	49152	RW	Word	-	0...1	flag
V2-HS1	Maximum value that can be set for Setpoint 1	V2	34824	0	38369	3	RW	Word	Y	V2-LS1...V2-HdL	°C/°F
V2-LS1	Minimum value that can be set for Setpoint 1	V2	34825	0	38369	12	RW	Word	Y	V2-LdL...V2-HS1	°C/°F
V2-HS2	Maximum value that can be set for Setpoint 2	V2	34826	0	38369	48	RW	Word	Y	V2-LS2...V2-HdL	°C/°F
V2-LS2	Minimum value that can be set for Setpoint 2	V2	34827	0	38369	192	RW	Word	Y	V2-LdL...V2-HS2	°C/°F
V2-HC1	Setpoint 1 operating mode (Heating/Cooling)	V2	34822	0	38369	768	RW	Word	-	0...1	flag
V2-HC2	Setpoint 2 operating mode (Heating/Cooling)	V2	34823	0	38369	3072	RW	Word	-	0...1	flag
V2-Cit	Minimum compressor output activation time	V2	34832	0	38369	49152	RW	Word	-	0...250	min
V2-CAt	Maximum compressor output activation time	V2	34833	0	38370	3	RW	Word	-	0...250	min
V2-Ont	Compressor output ON time if regulation probe is faulty	V2	34838	0	38370	12	RW	Word	-	0...250	min

Label	Description	Folder	Val. Par. Address	Val. Filter	Vis. Par. Address	Vis. Filter	R/W	Data Size	CPL	Range	MU
V2-OFt	Compressor output OFF time if regulation probe is faulty	V2	34839	0	38370	48	RW	Word	-	0...250	min
V2-dOn	Compressor output activation delay from call	V2	34834	0	38370	192	RW	Word	-	0...250	s
V2-dOF	Compressor output activation delay from switch-off	V2	34835	0	38370	768	RW	Word	-	0...250	min
V2-dbi	Delay between two consecutive compressor output power-ons	V2	34836	0	38370	3072	RW	Word	-	0...250	min
V2-OdO	Output activation delay at startup	V2	34837	0	38370	12288	RW	Word	-	0...250	min
V2-CFP	Condenser pre-ventilation time in Heat/Cool	V2	34921	0	38371	12	RW	Word	-	0...255	s
V2-CFd	Condenser fan cut-out during defrosting.	V2	34922	0	38371	48	RW	Word	-	0...1	flag
V2-OF1	Remote offset	V2	34843	0	38371	192	RW	Word	Y	-50.0...50.0	°C/°F
V2-Pot	Pump down time	V2	34949	0	38402	192	RW	Word	-	0...250	s
V2-SS1	Compressor softstart: advance hotgas valve opening	V2	34950	0	38402	768	RW	Word	-	0...250	s
V2-SS2	Compressor softstart: delay hotgas valve closing	V2	34951	0	38402	3072	RW	Word	-	0...250	s
V2-dP1	Select defrost probe 1	V2	34844	0	38371	768	RW	Word	-	0...8	num
V2-dP2	Defrost probe 2 selection	V2	34845	0	38371	3072	RW	Word	-	0...8	num
V2-dty	Type of defrost	V2	34848	0	38371	12288	RW	Word	-	0...4	num
V2-dFt	Dual evaporator defrost activation mode	V2	34846	0	38371	49152	RW	Word	-	0...2	num
V2-dit	Interval between defrosts	V2	34849	0	38372	3	RW	Word	-	0...250	hours
V2-dt1	Unit of measure for defrost intervals	V2	34852	0	38372	12	RW	Word	-	0...2	num
V2-dt2	Unit of measure for defrost duration	V2	34853	0	38372	48	RW	Word	-	0...2	num
V2-dCt	Defrost interval count mode	V2	34847	0	38372	192	RW	Word	-	0...5	num
V2-dOH	Defrost cycle activation delay from the call	V2	34854	0	38372	768	RW	Word	-	0...250	min
V2-dE1	Evaporator 1 defrost maximum duration	V2	34850	0	38372	3072	RW	Word	-	1...250	min
V2-dE2	Evaporator 2 defrost maximum duration	V2	34851	0	38372	12288	RW	Word	-	1...250	min
V2-dS1	Evaporator 1 defrost end temperature	V2	34856	0	38372	49152	RW	Word	Y	-58.0...302	°C/°F
V2-dS2	Evaporator 2 defrost end temperature	V2	34857	0	38373	3	RW	Word	Y	-58.0...302	°C/°F
V2-dSS	Temperature threshold for starting defrost	V2	34855	0	38373	12	RW	Word	Y	-58.0...302	°C/°F
V2-dPO	Defrost activation request at power-on	V2	34858	0	38373	48	RW	Word	-	0...1	flag
V2-tcd	Compressor output activation/deactivation time before a defrost	V2	34859	0	38373	192	RW	Word	Y	-60...60	min

Label	Description	Folder	Val. Par. Address	Val. Filter	Vis. Par. Address	Vis. Filter	R/W	Data Size	CPL	Range	MU
V2-ndE	minimum defrost duration time	V2	34860	0	38373	768	RW	Word	-	0...250	min
V2-PdC	Hot gas extraction time at the end of the defrost	V2	34861	0	38373	3072	RW	Word	-	0...250	min
V2-tPd	Pump down time before defrost start	V2	34863	0	38373	12288	RW	Word	-	0...255	min
V2-dPH	Regular defrost start hour	V2	34802	0	38373	49152	RW	Word	-	0...24	hours
V2-dPn	Regular defrost start minutes	V2	34803	0	38374	3	RW	Word	-	0...59	min
V2-dPd	Regular defrost interval duration	V2	34804	0	38374	12	RW	Word	-	1...7	day
V2-Fd1	1st weekend/holiday day	V2	34751	0	38374	48	RW	Word	-	0...7	num
V2-Fd2	2nd weekend/holiday day	V2	34752	0	38374	192	RW	Word	-	0...7	num
V2-Edt	Timeout and defrost end temperature specific to each event	V2	34753	0	38374	768	RW	Word	-	0...1	flag
V2-Fdn	Weekday defrost number	V2	34701	0	38408	3	RW	Word	-	0...250	num
V2-FFn	Weekend/holiday defrost number	V2	34702	0	38408	12	RW	Word	-	0...250	num
V2-PrH	Basin heater pre-activation time	V2	34958	0	38403	3072	RW	Word	-	0...255	min
V2-d1H	Weekday defrost no. 1 start hour	V2	34754	0	38374	3072	RW	Word	-	0...24	hours
V2-d1n	Weekday defrost no. 1 start minute	V2	34755	0	38374	12288	RW	Word	-	0...59	min
V2-d1t	1st weekday defrost duration	V2	34756	0	38374	49152	RW	Word	-	0...250	min
V2-d1S	1st weekday defrost end temperature	V2	34757	0	38375	3	RW	Word	Y	-58.0...302	°C/°F
V2-d2H	Weekday defrost no. 2 start hour	V2	34758	0	38375	12	RW	Word	-	V2-d1H...24	hours
V2-d2n	Weekday defrost no. 2 start minutes	V2	34759	0	38375	48	RW	Word	-	0...59	min
V2-d2t	2nd weekday defrost duration	V2	34760	0	38375	192	RW	Word	-	0...250	min
V2-d2S	2nd weekday defrost end temperature	V2	34761	0	38375	768	RW	Word	Y	-58.0...302	°C/°F
V2-d3H	Weekday defrost no. 3 start hour	V2	34762	0	38375	3072	RW	Word	-	V2-d2H...24	hours
V2-d3n	Weekday defrost no. 3 start minutes	V2	34763	0	38375	12288	RW	Word	-	0...59	min
V2-d3t	3rd weekday defrost duration	V2	34764	0	38375	49152	RW	Word	-	0...250	min
V2-d3S	3rd weekday defrost end temperature	V2	34765	0	38376	3	RW	Word	Y	-58.0...302	°C/°F
V2-d4H	Weekday defrost no. 4 start hour	V2	34766	0	38376	12	RW	Word	-	V2-d3H...24	hours
V2-d4n	Weekday defrost no. 4 start minutes	V2	34767	0	38376	48	RW	Word	-	0...59	min
V2-d4t	4th weekday defrost duration	V2	34768	0	38376	192	RW	Word	-	0...250	min
V2-d4S	4th weekday defrost end temperature	V2	34769	0	38376	768	RW	Word	Y	-58.0...302	°C/°F
V2-d5H	Weekday defrost no. 5 start hour	V2	34770	0	38376	3072	RW	Word	-	V2-d4H...24	hours

Label	Description	Folder	Val. Par. Address	Val. Filter	Vis. Par. Address	Vis. Filter	R/W	Data Size	CPL	Range	MU
V2-d5n	Weekday defrost no. 5 start minutes	V2	34771	0	38376	12288	RW	Word	-	0...59	min
V2-d5t	5th weekday defrost duration	V2	34772	0	38376	49152	RW	Word	-	0...250	min
V2-d5S	5th weekday defrost end temperature	V2	34773	0	38377	3	RW	Word	Y	-58.0...302	°C/°F
V2-d6H	Weekday defrost no. 6 start hour	V2	34774	0	38377	12	RW	Word	-	V2-d5H...24	hours
V2-d6n	Weekday defrost no. 6 start minutes	V2	34775	0	38377	48	RW	Word	-	0...59	min
V2-d6t	6th weekday defrost duration	V2	34776	0	38377	192	RW	Word	-	0...250	min
V2-d6S	6th weekday defrost end temperature	V2	34777	0	38377	768	RW	Word	Y	-58.0...302	°C/°F
V2-F1H	Weekend/holiday defrost no. 1 start hour	V2	34778	0	38377	3072	RW	Word	-	0...24	hours
V2-F1n	Weekend/holiday defrost no. 1 start minute	V2	34779	0	38377	12288	RW	Word	-	0...59	min
V2-F1t	1st weekend/holiday defrost duration	V2	34780	0	38377	49152	RW	Word	-	0...250	min
V2-F1S	1st weekend/holiday defrost end temperature	V2	34781	0	38378	3	RW	Word	Y	-58.0...302	°C/°F
V2-F2H	Weekend/holiday defrost no. 2 start hour	V2	34782	0	38378	12	RW	Word	-	V2-F1H...24	hours
V2-F2n	Weekend/holiday defrost no. 2 start minutes	V2	34783	0	38378	48	RW	Word	-	0...59	min
V2-F2t	2nd weekend/holiday defrost duration	V2	34784	0	38378	192	RW	Word	-	0...250	min
V2-F2S	2nd weekend/holiday defrost end temperature	V2	34785	0	38378	768	RW	Word	Y	-58.0...302	°C/°F
V2-F3H	Weekend/holiday defrost no. 3 start hour	V2	34786	0	38378	3072	RW	Word	-	V2-F2H...24	hours
V2-F3n	Weekend/holiday defrost no. 3 start minutes	V2	34787	0	38378	12288	RW	Word	-	0...59	min
V2-F3t	3rd weekend/holiday defrost duration	V2	34788	0	38378	49152	RW	Word	-	0...250	min
V2-F3S	3rd weekend/holiday defrost end temperature	V2	34789	0	38379	3	RW	Word	Y	-58.0...302	°C/°F
V2-F4H	Weekend/holiday defrost no. 4 start hour	V2	34790	0	38379	12	RW	Word	-	V2-F3H...24	hours
V2-F4n	Weekend/holiday defrost no. 4 start minutes	V2	34791	0	38379	48	RW	Word	-	0...59	min
V2-F4t	4th weekend/holiday defrost duration	V2	34792	0	38379	192	RW	Word	-	0...250	min
V2-F4S	4th weekend/holiday defrost end temperature	V2	34793	0	38379	768	RW	Word	Y	-58.0...302	°C/°F
V2-F5H	Weekend/holiday defrost no. 5 start hour	V2	34794	0	38379	3072	RW	Word	-	V2-F4H...24	hours
V2-F5n	Weekend/holiday defrost no. 5 start minutes	V2	34795	0	38379	12288	RW	Word	-	0...59	min
V2-F5t	5th weekend/holiday defrost duration	V2	34796	0	38379	49152	RW	Word	-	0...250	min

Label	Description	Folder	Val. Par. Address	Val. Filter	Vis. Par. Address	Vis. Filter	R/W	Data Size	CPL	Range	MU
V2-F5S	5th weekend/holiday defrost end temperature	V2	34797	0	38380	3	RW	Word	Y	-58.0...302	°C/°F
V2-F6H	Weekend/holiday defrost no. 6 start hour	V2	34798	0	38380	12	RW	Word	-	V2-F5H...24	hours
V2-F6n	Weekend/holiday defrost no. 6 start minutes	V2	34799	0	38380	48	RW	Word	-	0...59	min
V2-F6t	6th weekend/holiday defrost duration	V2	34800	0	38380	192	RW	Word	-	0...250	min
V2-F6S	6th weekend/holiday defrost end temperature	V2	34801	0	38380	768	RW	Word	Y	-58.0...302	°C/°F
V2-FP1	Selection of evaporator fan probe in normal mode	V2	34864	0	38380	3072	RW	Word	-	0...7	num
V2-FP2	Selection of evaporator fan probe in defrost	V2	34865	0	38380	12288	RW	Word	-	0...7	num
V2-FPt	FSt parameter mode (absolute or relative)	V2	34866	0	38380	49152	RW	Word	-	0...1	flag
V2-FSt	Evaporator fan disabling temperature	V2	34867	0	38381	3	RW	Word	Y	-58.0...302	°C/°F
V2-FAd	Evaporator fan trigger differential	V2	34868	0	38381	12	RW	Word	-	0.1...25.0	°C/°F
V2-Fdt	Evaporator fan activation delay time after a defrost cycle	V2	34869	0	38381	48	RW	Word	-	0...250	min
V2-dt	Dripping time	V2	34874	0	38381	192	RW	Word	-	0...250	min
V2-dFd	Evaporator fan cut-out during defrost	V2	34872	0	38381	768	RW	Word	-	0...1	flag
V2-FCO	Evaporator fan status with compressor output Off	V2	34871	0	38381	3072	RW	Word	-	0...4	num
V2-Fod	Evaporator fan status with door open	V2	34873	0	38381	12288	RW	Word	-	0...1	flag
V2-FdC	Evaporator fan shutoff delay after compressor deactivation	V2	34870	0	38381	49152	RW	Word	-	0...250	min
V2-FOn	Evaporator fan On time in cyclical regulator mode	V2	34875	0	38382	3	RW	Word	-	0...250	min
V2-FOF	Evaporator fan Off time in cyclical regulator mode	V2	34876	0	38382	12	RW	Word	-	0...250	min
V2-Fnn	Evaporator fan ON time in night mode (duty cycle)	V2	34877	0	38382	48	RW	Word	-	0...250	min
V2-FnF	Evaporator fan OFF time in night mode (duty cycle)	V2	34878	0	38382	192	RW	Word	-	0...250	min
V2-FE1	Variable speed fan probe selection	V2	34977	0	38406	48	RW	Word	-	0...12	num
V2-FEt	Setpoint mode	V2	34978	0	38406	192	RW	Word	-	0...1	flag
V2-FES	Setpoint	V2	34979	0	38406	768	RW	Word	Y	-58...302	°C/°F
V2-FEd	Band	V2	34980	0	38406	3072	RW	Word	-	0.1...50.0	°C/°F
V2-FEu	Cut-off band	V2	34981	0	38406	12288	RW	Word	-	0.0...25.0	°C/°F
V2-FEC	Cut-off differential	V2	34982	0	38406	49152	RW	Word	-	0.1...25.0	°C/°F

Label	Description	Folder	Val. Par. Address	Val. Filter	Vis. Par. Address	Vis. Filter	R/W	Data Size	CPL	Range	MU
V2-FEr	Fan shutoff delay after compressor deactivation	V2	34983	0	38407	3	RW	Word	-	0...250	min
V2-FE2	Minimum day percentage	V2	34984	0	38407	12	RW	Word	-	0...100	%
V2-FE3	Maximum day percentage with compressor on	V2	34985	0	38407	48	RW	Word	-	0...100	%
V2-FE4	Maximum day percentage with compressor off	V2	34986	0	38407	192	RW	Word	-	0...100	%
V2-FE5	Minimum night percentage	V2	34987	0	38407	768	RW	Word	-	0...100	%
V2-FE6	Maximum night percentage with compressor on	V2	34988	0	38407	3072	RW	Word	-	0...100	%
V2-FE7	Maximum night percentage with compressor off	V2	34989	0	38407	12288	RW	Word	-	0...100	%
V2-FE8	Percentage during defrost	V2	34990	0	38407	49152	RW	Word	-	0...100	%
V2-FE9	Percentage in the event of probe error	V2	34991	0	38419	12	RW	Word	-	0...100	%
V2-FEA	Maximum pick-up speed	V2	34992	0	38419	48	RW	Word	-	0...100	%
V2-FEb	Fan pick-up time	V2	34993	0	38419	192	RW	Word	-	0...250	s
V2-FEP	Fan forcing period at pick-up speed	V2	34994	0	38419	768	RW	Word	-	0...250	min
V2-rA1	Temperature alarm probe 1 selection	V2	34892	0	38382	768	RW	Word	-	0...7	num
V2-rA2	Temperature alarm probe 2 selection	V2	34893	0	38382	3072	RW	Word	-	0...7	num
V2-Att	Alarm mode (absolute or relative)	V2	34894	0	38382	12288	RW	Word	-	0...1	flag
V2-AFd	Alarm activation differential	V2	34895	0	38382	49152	RW	Word	-	0.1...25.0	°C/°F
V2-HA1	Maximum alarm 1 threshold	V2	34896	0	38383	3	RW	Word	Y	V2-LA1...302	°C/°F
V2-LA1	Minimum alarm 1 threshold	V2	34897	0	38383	12	RW	Word	Y	-58.0...V2-HA1	°C/°F
V2-HA2	Maximum alarm 2 threshold	V2	34898	0	38383	48	RW	Word	Y	V2-LA2...302	°C/°F
V2-LA2	Minimum alarm 2 threshold	V2	34899	0	38383	192	RW	Word	Y	-58.0...V2-HA2	°C/°F
V2-PAO	Temperature alarm exclusion time from power-on	V2	34900	0	38383	768	RW	Word	-	0...10	hours
V2-dAO	Exclusion time for temperature alarms after a defrost cycle	V2	34902	0	38383	3072	RW	Word	-	0...250	min
V2-OAO	High and low temperature alarms exclusion time after closing the door	V2	34901	0	38383	12288	RW	Word	-	0...10	hours
V2-tdO	Door open alarm exclusion time	V2	34946	0	38383	49152	RW	Word	-	0...250	min
V2-tA1	Probe 1 High/Minimum Alarm Delay	V2	34903	0	38384	3	RW	Word	-	0...250	min
V2-tA2	Probe 2 High/Minimum Alarm Delay	V2	34904	0	38384	12	RW	Word	-	0...250	min

Label	Description	Folder	Val. Par. Address	Val. Filter	Vis. Par. Address	Vis. Filter	R/W	Data Size	CPL	Range	MU
V2-dAt	Defrost ended due to timeout alarm signaling	V2	34862	0	38384	48	RW	Word	-	0...1	flag
V2-EAL	Regulators inhibited by external alarm	V2	34906	0	38384	192	RW	Word	-	0...2	num
V2-rA3	Sets the input used by the two thresholds alarm regulator	V2	34965	0	38404	12288	RW	Word	-	0...8	num
V2-ALL	Low alarm threshold (warning)	V2	34966	0	38404	49152	RW	Word	-	0.0...V2-ALH	num
V2-ALH	High alarm threshold (alarm)	V2	34967	0	38405	3	RW	Word	-	V2-ALL...100	num
V2-dAL	2 thresholds alarm regulator differential	V2	34968	0	38405	12	RW	Word	-	0.1...100	°C/°F
V2-AL1	Minimum persistence time above the ALL threshold due to alarm activation	V2	34969	0	38405	48	RW	Word	-	0...250	min
V2-AL2	Minimum persistence time above the ALH threshold due to alarm activation	V2	34976	0	38406	12	RW	Word	-	0...250	min
V2-tP	Enables alarm acknowledgment with any key	V2	34947	0	38384	768	RW	Word	-	0...1	flag
V2-Art	Regular watchdog alarm activation period	V2	34891	0	38384	3072	RW	Word	-	0...250	min*10
V2-ttA	Manage temperature alarms with door open.	V2	34995	0	38410	3072	RW	Word	-	0...1	flag
V2-dSd	Enable light relay from door switch	V2	34888	0	38384	12288	RW	Word	-	0...1	flag
V2-dLt	Light relay off delay from door closure	V2	34889	0	38384	49152	RW	Word	-	0...250	min
V2-OFL	Enable cold room lights off via key during the delay set in parameter dLt	V2	34890	0	38385	3	RW	Word	-	0...1	flag
V2-dOd	Enable utility shutoff upon door switch activation	V2	34905	0	38385	12	RW	Word	-	0...3	num
V2-dOA	Behavior forced by digital input	V2	34907	0	38385	48	RW	Word	-	0...5	num
V2-PEA	Enable forced behavior from door switch and/or external alarm.	V2	34908	0	38385	192	RW	Word	-	0...3	num
V2-dCO	Compressor activation delay from acknowledgment	V2	34909	0	38385	768	RW	Word	-	0...250	min
V2-dFO	Fan enabling delay from acknowledgment	V2	34910	0	38385	3072	RW	Word	-	0...250	min
V2-ASb	Instrument off active light/auxiliary digital input or key	V2	34936	0	38385	12288	RW	Word	-	0...1	flag
V2-L00	Shared probe	V2	34688	0	38385	49152	RW	Word	-	0...7	num
V2-L01	Distributed viewing (refers to secondary)	V2	34689	0	38386	3	RW	Word	-	0...2	num
V2-L02	Setpoint synchronization	V2	34690	0	38386	12	RW	Word	-	0...1	flag
V2-L03	Defrost synchronization	V2	34691	0	38386	48	RW	Word	-	0...2	num
V2-L04	Inhibit resources at the end of defrost	V2	34692	0	38386	192	RW	Word	-	0...1	flag

Label	Description	Folder	Val. Par. Address	Val. Filter	Vis. Par. Address	Vis. Filter	R/W	Data Size	CPL	Range	MU
V2-L05	Stand-by synchronization	V2	34693	0	38386	768	RW	Word	-	0...1	flag
V2-L06	Lights synchronization	V2	34694	0	38386	3072	RW	Word	-	0...1	flag
V2-L07	Reduced set synchronization	V2	34695	0	38386	12288	RW	Word	-	0...1	flag
V2-L08	AUX synchronization	V2	34696	0	38386	49152	RW	Word	-	0...1	flag
V2-L09	Shared saturation probe	V2	34697	0	38387	3	RW	Word	-	0...1	flag
V2-L10	Resource unlocking timeout during synchronized defrosts	V2	34948	0	38387	12	RW	Word	-	0...250	min
V2-L11	Number of devices connected in Link2	V2	34698	0	38404	48	RW	Word	-	0...8	num
V2-L12	Alarm relay sharing in Link2	V2	34699	0	38404	192	RW	Word	-	0...2	num
V2-L13	Link2 serial frame configuration	V2	34959	0	38403	12288	RW	Word	-	0...1	flag
V2-L14	Force cool mode	V2	34975	0	38406	3	RW	Word	-	0...1	flag
V2-L15	Shared buzzer and alarm silenced via Link2	V2	34955	0	38408	48	RW	Word	-	0...2	num
V2-dcS	Deep cooling setpoint	V2	34882	0	38387	768	RW	Word	Y	-58.0...302	°C/°F
V2-tdc	Deep cooling duration	V2	34883	0	38387	3072	RW	Word	-	0...250	min
V2-dcc	Defrost delay after deep cooling	V2	34884	0	38387	12288	RW	Word	-	0...250	min
V2-ESt	Type of action for the Energy Saving function	V2	34811	0	38387	49152	RW	Word	-	0...8	num
V2-ESF	Night mode activation (Energy Saving)	V2	34879	0	38388	3	RW	Word	-	0...1	flag
V2-Cdt	Door closing time	V2	34880	0	38388	12	RW	Word	-	0...255	min*10
V2-ESo	Low consumption mode disabling timeout (door switch)	V2	34881	0	38388	48	RW	Word	-	0...10	num
V2-OS1	Offset on setpoint 1	V2	34828	0	38388	192	RW	Word	Y	-50.0...50.0	°C/°F
V2-OS2	Offset on setpoint 2	V2	34829	0	38388	768	RW	Word	Y	-50.0...50.0	°C/°F
V2-Od1	Refrigerated cabinets energy saving offset 1	V2	34830	0	38388	3072	RW	Word	Y	-50.0...50.0	°C/°F
V2-Od2	Refrigerated cabinets energy saving offset 2	V2	34831	0	38388	12288	RW	Word	Y	-50.0...50.0	°C/°F
V2-dn1	Differential during energy saving mode 1	V2	34819	0	38388	49152	RW	Word	Y	-58.0...302	°C/°F
V2-dn2	Differential during energy saving mode 2	V2	34820	0	38389	3	RW	Word	Y	-58.0...302	°C/°F
V2-EdH	Weekday energy saving start hour	V2	34805	0	38389	12	RW	Word	-	0...24	hours
V2-Edn	Weekday energy saving start minutes	V2	34806	0	38389	48	RW	Word	-	0...59	min
V2-Edd	Weekday energy saving duration	V2	34807	0	38389	192	RW	Word	-	1...72	hours
V2-EFH	Weekend/holiday energy saving start hour	V2	34808	0	38389	768	RW	Word	-	0...24	hours

Label	Description	Folder	Val. Par. Address	Val. Filter	Vis. Par. Address	Vis. Filter	R/W	Data Size	CPL	Range	MU
V2-EFn	Weekend/holiday energy saving start minutes	V2	34809	0	38389	3072	RW	Word	-	0...59	min
V2-EFd	Weekend/holiday energy saving duration	V2	34810	0	38389	12288	RW	Word	-	1...72	hours
V2-FH	Frame heater probe selection	V2	34911	0	38389	49152	RW	Word	-	0...9	num
V2-FHt	Frame heater period	V2	34913	0	38390	3	RW	Word	-	1...250	s
V2-FH0	Frame heater set	V2	34914	0	38390	12	RW	Word	Y	-58.0...302	°C/°F
V2-FH1	Frame heater offset	V2	34915	0	38390	48	RW	Word	-	0.0...25.0	°C/°F
V2-FH2	Frame heater band	V2	34916	0	38390	192	RW	Word	Y	-58.0...302	°C/°F
V2-FH3	Frame heater minimum percentage/duty-cycle	V2	34917	0	38390	768	RW	Word	-	0...100	%
V2-FH4	Frame heater maximum percentage/day duty-cycle	V2	34918	0	38390	3072	RW	Word	-	0...100	%
V2-FH5	Frame heater maximum percentage/night duty-cycle	V2	34919	0	38390	12288	RW	Word	-	0...100	%
V2-FH6	Frame heater percentage/duty-cycle in defrost	V2	34920	0	38390	49152	RW	Word	-	0...100	%
V2-LOC	Disable terminal	V2	34923	0	38391	3	RW	Word	-	0...1	flag
V2-PS1	Password 1 value	V2	34924	0	38391	12	RW	Word	-	0...250	num
V2-PS2	Password 2 value	V2	34925	0	38391	48	RW	Word	-	0...250	num
V2-ndt	Display with decimal point	V2	34926	0	38391	192	RW	Word	-	0...1	flag
V2-CA1	Analog input 1 calibration	V2	34732	0	38391	768	RW	Word	Y	-30.0...30.0	°C/°F
V2-CA2	Analog input 2 calibration	V2	34733	0	38391	3072	RW	Word	Y	-30.0...30.0	°C/°F
V2-CA3	Analog input 3 calibration	V2	34734	0	38391	12288	RW	Word	Y	-30.0...30.0	°C/°F
V2-CA4	Analog input 4 calibration	V2	34735	0	38391	49152	RW	Word	Y	-30.0...30.0	°C/°F
V2-CA5	Analog input 5 calibration	V2	34736	0	38392	3	RW	Word	Y	-30.0...30.0	°C/°F
V2-CA6	Analog input 6 calibration	V2	34737	0	38392	12	RW	Word	Y	-30.0...30.0	bar/psi
V2-CA7	Analog input 7 calibration	V2	34738	0	38392	48	RW	Word	Y	-30.0...30.0	bar/psi
V2-LdL	Minimum display value	V2	34927	0	38392	192	RW	Word	Y	-58.0...V2-HdL	°C/°F
V2-HdL	Maximum display value	V2	34928	0	38392	768	RW	Word	Y	V2-LdL...302	°C/°F
V2-ddL	Display lock mode during a defrost	V2	34929	0	38392	3072	RW	Word	-	0...2	num
V2-Ldd	Display lock timeout from end of defrost	V2	34930	0	38392	12288	RW	Word	-	0...250	min
V2-dro	Select °C / °F	V2	34931	0	38392	49152	RW	Word	-	0...1	flag
V2-SbP	Pressure unit of measure	V2	34932	0	38393	3	RW	Word	-	0...1	flag

Label	Description	Folder	Val. Par. Address	Val. Filter	Vis. Par. Address	Vis. Filter	R/W	Data Size	CPL	Range	MU
V2-ddd	Select main display value	V2	34933	0	38393	12	RW	Word	-	0...8	num
V2-ddE	Resource displayed on ECHO	V2	34934	0	38393	48	RW	Word	-	0...11	num
V2-rPH	Receiver maximum valve opening %	V2	34885	0	38393	192	RW	Word	-	0...5	num
V2-H00	Select analog input type NTC/PTC	V2	34700	0	38393	768	RW	Word	-	0...2	num
V2-H02	Function activation time from terminal	V2	34935	0	38393	3072	RW	Word	-	0...250	s
V2-H08	Stand-by operating mode	V2	34937	0	38393	12288	RW	Word	-	0...2	num
V2-H11	Digital input 1 configurability and polarity	V2	34703	0	38393	49152	RW	Word	Y	-19...19	num
V2-H12	Digital input 2 configurability and polarity	V2	34704	0	38394	3	RW	Word	Y	-19...19	num
V2-H13	Digital input 3 configurability and polarity	V2	34705	0	38394	12	RW	Word	Y	-19...19	num
V2-H14	Digital input 4 configurability and polarity	V2	34706	0	38394	48	RW	Word	Y	-19...19	num
V2-H15	Digital input 5 configurability and polarity	V2	34707	0	38394	192	RW	Word	Y	-19...19	num
V2-H16	Digital input 6 configurability and polarity	V2	34708	0	38394	768	RW	Word	Y	-19...19	num
V2-H17	Digital input 7 configurability and polarity	V2	34709	0	38394	3072	RW	Word	Y	-19...19	num
V2-H18	Digital input 8 configurability and polarity	V2	34710	0	38394	12288	RW	Word	Y	-19...19	num
V2-i01	Digital input 9 configurability and polarity	V2	34970	0	38405	192	RW	Word	Y	-19...19	num
V2-i02	Digital input 10 configurability and polarity	V2	34971	0	38405	768	RW	Word	Y	-19...19	num
V2-dti	Digital inputs 1 and 2 delay unit of measure	V2	34719	0	38394	49152	RW	Word	-	0...1	flag
V2-d11	D.I. 1 activation indication delay time	V2	34711	0	38395	3	RW	Word	-	0...255	min
V2-d12	D.I. 2 activation indication delay time	V2	34712	0	38395	12	RW	Word	-	0...255	min
V2-d13	D.I. 3 activation indication delay time	V2	34713	0	38395	48	RW	Word	-	0...255	min
V2-d14	D.I. 4 activation indication delay time	V2	34714	0	38395	192	RW	Word	-	0...255	min
V2-d15	D.I. 5 activation indication delay time	V2	34715	0	38395	768	RW	Word	-	0...255	min
V2-d16	D.I. 6 activation indication delay time	V2	34716	0	38395	3072	RW	Word	-	0...255	min
V2-d17	D.I. 7 activation indication delay time	V2	34717	0	38395	12288	RW	Word	-	0...255	min
V2-d18	D.I. 8 activation indication delay time	V2	34718	0	38395	49152	RW	Word	-	0...255	min
V2-01i	D.I. 9 activation indication delay time	V2	34972	0	38405	3072	RW	Word	-	0...255	min

Label	Description	Folder	Val. Par. Address	Val. Filter	Vis. Par. Address	Vis. Filter	R/W	Data Size	CPL	Range	MU
V2-02i	D.I. 10 activation indication delay time	V2	34973	0	38405	12288	RW	Word	-	0...255	min
V2-H21	Configurability of digital output 1	V2	34740	0	38396	3	RW	Word	-	0...19	num
V2-H22	Configurability of digital output 2	V2	34741	0	38396	12	RW	Word	-	0...19	num
V2-H23	Configurability of digital output 3	V2	34742	0	38396	48	RW	Word	-	0...19	num
V2-H24	Configurability of digital output 4	V2	34743	0	38396	192	RW	Word	-	0...19	num
V2-H25	Configurability of digital output 5	V2	34744	0	38396	768	RW	Word	-	0...19	num
V2-H27	Configurability of digital output 7	V2	34746	0	38396	12288	RW	Word	-	0...19	num
V2-H29	Enable buzzer	V2	34747	0	38396	49152	RW	Word	-	0...1	num
V2-d01	Configurability of digital output 8	V2	34963	0	38404	768	RW	Word	-	0...19	num
V2-d02	Configurability of digital output 9	V2	34964	0	38404	3072	RW	Word	-	0...19	num
V2-H31	Configurability of the UP key	V2	34938	0	38397	3	RW	Word	-	0...9	num
V2-H32	Configurability of the DOWN key	V2	34939	0	38397	12	RW	Word	-	0...9	num
V2-H33	Configurability of the ESC key	V2	34940	0	38397	48	RW	Word	-	0...9	num
V2-H34	Configurability of the Free 1 key	V2	34941	0	38397	192	RW	Word	-	0...9	num
V2-H35	Configurability of the Free 2 key	V2	34942	0	38397	768	RW	Word	-	0...9	num
V2-H36	Configurability of the Free 3 key	V2	34943	0	38397	3072	RW	Word	-	0...9	num
V2-H37	Configurability of the Free 4 key	V2	34944	0	38397	12288	RW	Word	-	0...9	num
V2-H41	Configurability of analog input 1	V2	34720	0	38397	49152	RW	Word	-	0...2	num
V2-H42	Configurability of analog input 2	V2	34721	0	38398	3	RW	Word	-	0...2	num
V2-H43	Configurability of analog input 3	V2	34722	0	38398	12	RW	Word	-	0...2	num
V2-H44	Configurability of analog input 4	V2	34723	0	38398	48	RW	Word	-	0...2	num
V2-H45	Configurability of analog input 5	V2	34724	0	38398	192	RW	Word	-	0...2	num
V2-H46	Configurability of analog input 6	V2	34725	0	38398	768	RW	Word	-	0...2	num
V2-H47	Configurability of analog input 7	V2	34726	0	38398	3072	RW	Word	-	0...2	num
V2-H48	Configurability of analog input 8	V2	34974	0	38405	49152	RW	Word	-	0...2	num
V2-H50	Configurability of analog output 1	V2	34748	0	38398	12288	RW	Word	-	0...1	num
V2-H51	Function associated with analog output	V2	34749	0	38398	49152	RW	Word	-	0...3	num
V2-H68	RTC present	V2	34750	0	38399	3	RW	Word	-	0...1	num
V2-H70	Selection of 1st sensor for virtual probe	V2	34728	0	38399	12	RW	Word	-	0...5	num
V2-H71	Selection of 2nd sensor for virtual probe	V2	34729	0	38399	48	RW	Word	-	0...5	num

Label	Description	Folder	Val. Par. Address	Val. Filter	Vis. Par. Address	Vis. Filter	R/W	Data Size	CPL	Range	MU
V2-H72	Day virtual probe calculation %	V2	34730	0	38399	192	RW	Word	-	0...100	%
V2-H73	Night virtual probe calculation %	V2	34731	0	38399	768	RW	Word	-	0...100	%
V2-H74	Selection of 1st sensor for filtered virtual probe	V2	34960	0	38403	49152	RW	Word	-	0...65635	num
V2-H75	Percentage in thousandths of the incoming signal for filtered virtual probe	V2	34961	0	38404	3	RW	Word	-	0...65635	num
V2-H76	Filtered virtual probe offset	V2	34962	0	38404	12	RW	Word	-	0...65635	num
V2-EtY	Selection of electronic expansion valve driver	V2	34945	0	38399	3072	RW	Word	-	0...1	flag
V2-UL	Visibility of parameter transfer function (Device -> UNICARD/MFK)	V2	-	-	38402	3	RW	Word	-	0...3	num
V2-dL	Visibility of parameter transfer function (UNICARD/MFK -> Device)	V2	-	-	38402	12	RW	Word	-	0...3	num
V2-Fr	Visibility of UNICARD/MFK formatting function	V2	-	-	38402	48	RW	Word	-	0...3	num
V2-OHP	Selection of oil temperature probe	V2	34952	0	38402	12288	RW	Word	-	0...8	num
V2-OSP	Oil heater setpoint	V2	34953	0	38402	49152	RW	Word	Y	V2-OLS...V2-OHS	°C/°F
V2-OHd	Oil heater differential	V2	34954	0	38403	3	RW	Word	-	0.1...25.0	°C/°F
V2-OHS	Maximum oil heater setpoint value that can be set	V2	34956	0	38403	48	RW	Word	Y	V2-OLS...302	°C/°F
V2-OLS	Minimum oil heater setpoint value that can be set	V2	34957	0	38403	192	RW	Word	Y	-58.0...V2-OHS	°C/°F
Application 3 parameters											
V3-rE	Regulation type	V3	35196	0	38464	3	RW	Word	-	0...6	num
V3-rP1	Thermostat regulation probe 1	V3	35197	0	38464	12	RW	Word	-	0...8	num
V3-rP2	Thermostat regulation probe 2	V3	35198	0	38464	48	RW	Word	-	0...9	num
V3-SP1	Regulation setpoint 1	V3	35199	0	38464	192	RW	Word	Y	V3-LS1...V3-HS1	°C/°F
V3-dF1	Setpoint differential 1	V3	35200	0	38464	768	RW	Word	Y	-58.0...302	°C/°F
V3-SP2	Regulation setpoint 2	V3	35201	0	38464	3072	RW	Word	Y	V3-LS2...V3-HS2	°C/°F
V3-dF2	Setpoint differential 2	V3	35202	0	38464	12288	RW	Word	Y	-58.0...302	°C/°F
V3-Stt	Differential management mode	V3	35205	0	38464	49152	RW	Word	-	0...1	flag
V3-HS1	Maximum value that can be set for Setpoint 1	V3	35208	0	38465	3	RW	Word	Y	V3-LS1...V3-HdL	°C/°F
V3-LS1	Minimum value that can be set for Setpoint 1	V3	35209	0	38465	12	RW	Word	Y	V3-LdL...V3-HS1	°C/°F
V3-HS2	Maximum value that can be set for Setpoint 2	V3	35210	0	38465	48	RW	Word	Y	V3-LS2...V3-HdL	°C/°F

Label	Description	Folder	Val. Par. Address	Val. Filter	Vis. Par. Address	Vis. Filter	R/W	Data Size	CPL	Range	MU
V3-LS2	Minimum value that can be set for Setpoint 2	V3	35211	0	38465	192	RW	Word	Y	V3-LdL...V3-HS2	°C/°F
V3-HC1	Setpoint 1 operating mode (Heating/Cooling)	V3	35206	0	38465	768	RW	Word	-	0...1	flag
V3-HC2	Setpoint 2 operating mode (Heating/Cooling)	V3	35207	0	38465	3072	RW	Word	-	0...1	flag
V3-Cit	Minimum compressor output activation time	V3	35216	0	38465	49152	RW	Word	-	0...250	min
V3-CAt	Maximum compressor output activation time	V3	35217	0	38466	3	RW	Word	-	0...250	min
V3-Ont	Compressor output ON time if regulation probe is faulty	V3	35222	0	38466	12	RW	Word	-	0...250	min
V3-OFt	Compressor output OFF time if regulation probe is faulty	V3	35223	0	38466	48	RW	Word	-	0...250	min
V3-dOn	Compressor output activation delay from call	V3	35218	0	38466	192	RW	Word	-	0...250	s
V3-dOF	Compressor output activation delay from switch-off	V3	35219	0	38466	768	RW	Word	-	0...250	min
V3-dbi	Delay between two consecutive compressor output power-ons	V3	35220	0	38466	3072	RW	Word	-	0...250	min
V3-OdO	Output activation delay at startup	V3	35221	0	38466	12288	RW	Word	-	0...250	min
V3-CFP	Condenser pre-ventilation time in Heat/Cool	V3	35305	0	38467	12	RW	Word	-	0...255	s
V3-CFd	Condenser fan cut-out during defrosting.	V3	35306	0	38467	48	RW	Word	-	0...1	flag
V3-OF1	Remote offset	V3	35227	0	38467	192	RW	Word	Y	-50.0...50.0	°C/°F
V3-Pot	Pump down time	V3	35333	0	38498	192	RW	Word	-	0...250	s
V3-SS1	Compressor softstart: advance hotgas valve opening	V3	35334	0	38498	768	RW	Word	-	0...250	s
V3-SS2	Compressor softstart: delay hotgas valve closing	V3	35335	0	38498	3072	RW	Word	-	0...250	s
V3-dP1	Select defrost probe 1	V3	35228	0	38467	768	RW	Word	-	0...8	num
V3-dP2	Defrost probe 2 selection	V3	35229	0	38467	3072	RW	Word	-	0...8	num
V3-dty	Type of defrost	V3	35232	0	38467	12288	RW	Word	-	0...4	num
V3-dFt	Dual evaporator defrost activation mode	V3	35230	0	38467	49152	RW	Word	-	0...2	num
V3-dit	Interval between defrosts	V3	35233	0	38468	3	RW	Word	-	0...250	hours
V3-dt1	Unit of measure for defrost intervals	V3	35236	0	38468	12	RW	Word	-	0...2	num
V3-dt2	Unit of measure for defrost duration	V3	35237	0	38468	48	RW	Word	-	0...2	num
V3-dCt	Defrost interval count mode	V3	35231	0	38468	192	RW	Word	-	0...5	num
V3-dOH	Defrost cycle activation delay from the call	V3	35238	0	38468	768	RW	Word	-	0...250	min

Label	Description	Folder	Val. Par. Address	Val. Filter	Vis. Par. Address	Vis. Filter	R/W	Data Size	CPL	Range	MU
V3-dE1	Evaporator 1 defrost maximum duration	V3	35234	0	38468	3072	RW	Word	-	1...250	min
V3-dE2	Evaporator 2 defrost maximum duration	V3	35235	0	38468	12288	RW	Word	-	1...250	min
V3-dS1	Evaporator 1 defrost end temperature	V3	35240	0	38468	49152	RW	Word	Y	-58.0...302	°C/°F
V3-dS2	Evaporator 2 defrost end temperature	V3	35241	0	38469	3	RW	Word	Y	-58.0...302	°C/°F
V3-dSS	Temperature threshold for starting defrost	V3	35239	0	38469	12	RW	Word	Y	-58.0...302	°C/°F
V3-dPO	Defrost activation request at power-on	V3	35242	0	38469	48	RW	Word	-	0...1	flag
V3-tcd	Compressor output activation/deactivation time before a defrost	V3	35243	0	38469	192	RW	Word	Y	-60...60	min
V3-ndE	minimum defrost duration time	V3	35244	0	38469	768	RW	Word	-	0...250	min
V3-PdC	Hot gas extraction time at the end of the defrost	V3	35245	0	38469	3072	RW	Word	-	0...250	min
V3-tPd	Pump down time before defrost start	V3	35247	0	38469	12288	RW	Word	-	0...255	min
V3-dPH	Regular defrost start hour	V3	35186	0	38469	49152	RW	Word	-	0...24	hours
V3-dPn	Regular defrost start minutes	V3	35187	0	38470	3	RW	Word	-	0...59	min
V3-dPd	Regular defrost interval duration	V3	35188	0	38470	12	RW	Word	-	1...7	day
V3-Fd1	1st weekend/holiday day	V3	35135	0	38470	48	RW	Word	-	0...7	num
V3-Fd2	2nd weekend/holiday day	V3	35136	0	38470	192	RW	Word	-	0...7	num
V3-Edt	Timeout and defrost end temperature specific to each event	V3	35137	0	38470	768	RW	Word	-	0...1	flag
V3-Fdn	Weekday defrost number	V3	35085	0	38504	3	RW	Word	-	0...250	num
V3-FFn	Weekend/holiday defrost number	V3	35086	0	38504	12	RW	Word	-	0...250	num
V3-PrH	Basin heater pre-activation time	V3	35342	0	38499	3072	RW	Word	-	0...255	min
V3-d1H	Weekday defrost no. 1 start hour	V3	35138	0	38470	3072	RW	Word	-	0...24	hours
V3-d1n	Weekday defrost no. 1 start minute	V3	35139	0	38470	12288	RW	Word	-	0...59	min
V3-d1t	1st weekday defrost duration	V3	35140	0	38470	49152	RW	Word	-	0...250	min
V3-d1S	1st weekday defrost end temperature	V3	35141	0	38471	3	RW	Word	Y	-58.0...302	°C/°F
V3-d2H	Weekday defrost no. 2 start hour	V3	35142	0	38471	12	RW	Word	-	V3-d1H...24	hours
V3-d2n	Weekday defrost no. 2 start minutes	V3	35143	0	38471	48	RW	Word	-	0...59	min
V3-d2t	2nd weekday defrost duration	V3	35144	0	38471	192	RW	Word	-	0...250	min
V3-d2S	2nd weekday defrost end temperature	V3	35145	0	38471	768	RW	Word	Y	-58.0...302	°C/°F
V3-d3H	Weekday defrost no. 3 start hour	V3	35146	0	38471	3072	RW	Word	-	V3-d2H...24	hours
V3-d3n	Weekday defrost no. 3 start minutes	V3	35147	0	38471	12288	RW	Word	-	0...59	min

Label	Description	Folder	Val. Par. Address	Val. Filter	Vis. Par. Address	Vis. Filter	R/W	Data Size	CPL	Range	MU
V3-d3t	3rd weekday defrost duration	V3	35148	0	38471	49152	RW	Word	-	0...250	min
V3-d3S	3rd weekday defrost end temperature	V3	35149	0	38472	3	RW	Word	Y	-58.0...302	°C/°F
V3-d4H	Weekday defrost no. 4 start hour	V3	35150	0	38472	12	RW	Word	-	V3-d3H...24	hours
V3-d4n	Weekday defrost no. 4 start minutes	V3	35151	0	38472	48	RW	Word	-	0...59	min
V3-d4t	4th weekday defrost duration	V3	35152	0	38472	192	RW	Word	-	0...250	min
V3-d4S	4th weekday defrost end temperature	V3	35153	0	38472	768	RW	Word	Y	-58.0...302	°C/°F
V3-d5H	Weekday defrost no. 5 start hour	V3	35154	0	38472	3072	RW	Word	-	V3-d4H...24	hours
V3-d5n	Weekday defrost no. 5 start minutes	V3	35155	0	38472	12288	RW	Word	-	0...59	min
V3-d5t	5th weekday defrost duration	V3	35156	0	38472	49152	RW	Word	-	0...250	min
V3-d5S	5th weekday defrost end temperature	V3	35157	0	38473	3	RW	Word	Y	-58.0...302	°C/°F
V3-d6H	Weekday defrost no. 6 start hour	V3	35158	0	38473	12	RW	Word	-	V3-d5H...24	hours
V3-d6n	Weekday defrost no. 6 start minutes	V3	35159	0	38473	48	RW	Word	-	0...59	min
V3-d6t	6th weekday defrost duration	V3	35160	0	38473	192	RW	Word	-	0...250	min
V3-d6S	6th weekday defrost end temperature	V3	35161	0	38473	768	RW	Word	Y	-58.0...302	°C/°F
V3-F1H	Weekend/holiday defrost no. 1 start hour	V3	35162	0	38473	3072	RW	Word	-	0...24	hours
V3-F1n	Weekend/holiday defrost no. 1 start minute	V3	35163	0	38473	12288	RW	Word	-	0...59	min
V3-F1t	1st weekend/holiday defrost duration	V3	35164	0	38473	49152	RW	Word	-	0...250	min
V3-F1S	1st weekend/holiday defrost end temperature	V3	35165	0	38474	3	RW	Word	Y	-58.0...302	°C/°F
V3-F2H	Weekend/holiday defrost no. 2 start hour	V3	35166	0	38474	12	RW	Word	-	V3-F1H...24	hours
V3-F2n	Weekend/holiday defrost no. 2 start minutes	V3	35167	0	38474	48	RW	Word	-	0...59	min
V3-F2t	2nd weekend/holiday defrost duration	V3	35168	0	38474	192	RW	Word	-	0...250	min
V3-F2S	2nd weekend/holiday defrost end temperature	V3	35169	0	38474	768	RW	Word	Y	-58.0...302	°C/°F
V3-F3H	Weekend/holiday defrost no. 3 start hour	V3	35170	0	38474	3072	RW	Word	-	V3-F2H...24	hours
V3-F3n	Weekend/holiday defrost no. 3 start minutes	V3	35171	0	38474	12288	RW	Word	-	0...59	min
V3-F3t	3rd weekend/holiday defrost duration	V3	35172	0	38474	49152	RW	Word	-	0...250	min
V3-F3S	3rd weekend/holiday defrost end temperature	V3	35173	0	38475	3	RW	Word	Y	-58.0...302	°C/°F
V3-F4H	Weekend/holiday defrost no. 4 start hour	V3	35174	0	38475	12	RW	Word	-	V3-F3H...24	hours

Label	Description	Folder	Val. Par. Address	Val. Filter	Vis. Par. Address	Vis. Filter	R/W	Data Size	CPL	Range	MU
V3-F4n	Weekend/holiday defrost no. 4 start minutes	V3	35175	0	38475	48	RW	Word	-	0...59	min
V3-F4t	4th weekend/holiday defrost duration	V3	35176	0	38475	192	RW	Word	-	0...250	min
V3-F4S	4th weekend/holiday defrost end temperature	V3	35177	0	38475	768	RW	Word	Y	-58.0...302	°C/°F
V3-F5H	Weekend/holiday defrost no. 5 start hour	V3	35178	0	38475	3072	RW	Word	-	V3-F4H...24	hours
V3-F5n	Weekend/holiday defrost no. 5 start minutes	V3	35179	0	38475	12288	RW	Word	-	0...59	min
V3-F5t	5th weekend/holiday defrost duration	V3	35180	0	38475	49152	RW	Word	-	0...250	min
V3-F5S	5th weekend/holiday defrost end temperature	V3	35181	0	38476	3	RW	Word	Y	-58.0...302	°C/°F
V3-F6H	Weekend/holiday defrost no. 6 start hour	V3	35182	0	38476	12	RW	Word	-	V3-F5H...24	hours
V3-F6n	Weekend/holiday defrost no. 6 start minutes	V3	35183	0	38476	48	RW	Word	-	0...59	min
V3-F6t	6th weekend/holiday defrost duration	V3	35184	0	38476	192	RW	Word	-	0...250	min
V3-F6S	6th weekend/holiday defrost end temperature	V3	35185	0	38476	768	RW	Word	Y	-58.0...302	°C/°F
V3-FP1	Selection of evaporator fan probe in normal mode	V3	35248	0	38476	3072	RW	Word	-	0...7	num
V3-FP2	Selection of evaporator fan probe in defrost	V3	35249	0	38476	12288	RW	Word	-	0...7	num
V3-FPt	FSt parameter mode (absolute or relative)	V3	35250	0	38476	49152	RW	Word	-	0...1	flag
V3-FSt	Evaporator fan disabling temperature	V3	35251	0	38477	3	RW	Word	Y	-58.0...302	°C/°F
V3-FAd	Evaporator fan trigger differential	V3	35252	0	38477	12	RW	Word	-	0.1...25.0	°C/°F
V3-Fdt	Evaporator fan activation delay time after a defrost cycle	V3	35253	0	38477	48	RW	Word	-	0...250	min
V3-dt	Dripping time	V3	35258	0	38477	192	RW	Word	-	0...250	min
V3-dFd	Evaporator fan cut-out during defrost	V3	35256	0	38477	768	RW	Word	-	0...1	flag
V3-FCO	Evaporator fan status with compressor output Off	V3	35255	0	38477	3072	RW	Word	-	0...4	num
V3-Fod	Evaporator fan status with door open	V3	35257	0	38477	12288	RW	Word	-	0...1	flag
V3-FdC	Evaporator fan shutoff delay after compressor deactivation	V3	35254	0	38477	49152	RW	Word	-	0...250	min
V3-FOn	Evaporator fan On time in cyclical regulator mode	V3	35259	0	38478	3	RW	Word	-	0...250	min
V3-FOF	Evaporator fan Off time in cyclical regulator mode	V3	35260	0	38478	12	RW	Word	-	0...250	min
V3-Fnn	Evaporator fan ON time in night mode (duty cycle)	V3	35261	0	38478	48	RW	Word	-	0...250	min

Label	Description	Folder	Val. Par. Address	Val. Filter	Vis. Par. Address	Vis. Filter	R/W	Data Size	CPL	Range	MU
V3-FnF	Evaporator fan OFF time in night mode (duty cycle)	V3	35262	0	38478	192	RW	Word	-	0...250	min
V3-FE1	Variable speed fan probe selection	V3	35361	0	38502	48	RW	Word	-	0...12	num
V3-FEt	Setpoint mode	V3	35362	0	38502	192	RW	Word	-	0...1	flag
V3-FES	Setpoint	V3	35363	0	38502	768	RW	Word	Y	-58...302	°C/°F
V3-FEd	Band	V3	35364	0	38502	3072	RW	Word	-	0.1...50.0	°C/°F
V3-FEu	Cut-off band	V3	35365	0	38502	12288	RW	Word	-	0.0...25.0	°C/°F
V3-FEC	Cut-off differential	V3	35366	0	38502	49152	RW	Word	-	0.1...25.0	°C/°F
V3-FEr	Fan shutoff delay after compressor deactivation	V3	35367	0	38503	3	RW	Word	-	0...250	min
V3-FE2	Minimum day percentage	V3	35368	0	38503	12	RW	Word	-	0...100	%
V3-FE3	Maximum day percentage with compressor on	V3	35369	0	38503	48	RW	Word	-	0...100	%
V3-FE4	Maximum day percentage with compressor off	V3	35370	0	38503	192	RW	Word	-	0...100	%
V3-FE5	Minimum night percentage	V3	35371	0	38503	768	RW	Word	-	0...100	%
V3-FE6	Maximum night percentage with compressor on	V3	35372	0	38503	3072	RW	Word	-	0...100	%
V3-FE7	Maximum night percentage with compressor off	V3	35373	0	38503	12288	RW	Word	-	0...100	%
V3-FE8	Percentage during defrost	V3	35374	0	38503	49152	RW	Word	-	0...100	%
V3-FE9	Percentage in the event of probe error	V3	35375	0	38515	12	RW	Word	-	0...100	%
V3-FEA	Maximum pick-up speed	V3	35376	0	38515	48	RW	Word	-	0...100	%
V3-FEb	Fan pick-up time	V3	35377	0	38515	192	RW	Word	-	0...250	s
V3-FEP	Fan forcing period at pick-up speed	V3	35378	0	38515	768	RW	Word	-	0...250	min
V3-rA1	Temperature alarm probe 1 selection	V3	35276	0	38478	768	RW	Word	-	0...7	num
V3-rA2	Temperature alarm probe 2 selection	V3	35277	0	38478	3072	RW	Word	-	0...7	num
V3-Att	Alarm mode (absolute or relative)	V3	35278	0	38478	12288	RW	Word	-	0...1	flag
V3-AFd	Alarm activation differential	V3	35279	0	38478	49152	RW	Word	-	0.1...25.0	°C/°F
V3-HA1	Maximum alarm 1 threshold	V3	35280	0	38479	3	RW	Word	Y	V3-LA1...302	°C/°F
V3-LA1	Minimum alarm 1 threshold	V3	35281	0	38479	12	RW	Word	Y	-58.0...V3-HA1	°C/°F
V3-HA2	Maximum alarm 2 threshold	V3	35282	0	38479	48	RW	Word	Y	V3-LA2...302	°C/°F
V3-LA2	Minimum alarm 2 threshold	V3	35283	0	38479	192	RW	Word	Y	-58.0...V3-HA2	°C/°F

Label	Description	Folder	Val. Par. Address	Val. Filter	Vis. Par. Address	Vis. Filter	R/W	Data Size	CPL	Range	MU
V3-PAO	Temperature alarm exclusion time from power-on	V3	35284	0	38479	768	RW	Word	-	0...10	hours
V3-dAO	Exclusion time for temperature alarms after a defrost cycle	V3	35286	0	38479	3072	RW	Word	-	0...250	min
V3-OAO	High and low temperature alarms exclusion time after closing the door	V3	35285	0	38479	12288	RW	Word	-	0...10	hours
V3-tdO	Door open alarm exclusion time	V3	35330	0	38479	49152	RW	Word	-	0...250	min
V3-tA1	Probe 1 High/Minimum Alarm Delay	V3	35287	0	38480	3	RW	Word	-	0...250	min
V3-tA2	Probe 2 High/Minimum Alarm Delay	V3	35288	0	38480	12	RW	Word	-	0...250	min
V3-dAt	Defrost ended due to timeout alarm signaling	V3	35246	0	38480	48	RW	Word	-	0...1	flag
V3-EAL	Regulators inhibited by external alarm	V3	35290	0	38480	192	RW	Word	-	0...2	num
V3-rA3	Sets the input used by the two thresholds alarm regulator	V3	35349	0	38500	12288	RW	Word	-	0...8	num
V3-ALL	Low alarm threshold (warning)	V3	35350	0	38500	49152	RW	Word	-	0.0...V3-ALH	num
V3-ALH	High alarm threshold (alarm)	V3	35351	0	38501	3	RW	Word	-	V3-ALL...100	num
V3-dAL	2 thresholds alarm regulator differential	V3	35352	0	38501	12	RW	Word	-	0.1...100	°C/°F
V3-AL1	Minimum persistence time above the ALL threshold due to alarm activation	V3	35353	0	38501	48	RW	Word	-	0...250	min
V3-AL2	Minimum persistence time above the ALH threshold due to alarm activation	V3	35360	0	38502	12	RW	Word	-	0...250	min
V3-tP	Enables alarm acknowledgment with any key	V3	35331	0	38480	768	RW	Word	-	0...1	flag
V3-Art	Regular watchdog alarm activation period	V3	35275	0	38480	3072	RW	Word	-	0...250	min*10
V3-ttA	Manage temperature alarms with door open.	V3	35379	0	38506	3072	RW	Word	-	0...1	flag
V3-dSd	Enable light relay from door switch	V3	35272	0	38480	12288	RW	Word	-	0...1	flag
V3-dLt	Light relay off delay from door closure	V3	35273	0	38480	49152	RW	Word	-	0...250	min
V3-OFL	Enable cold room lights off via key during the delay set in parameter dLt	V3	35274	0	38481	3	RW	Word	-	0...1	flag
V3-dOd	Enable utility shutoff upon door switch activation	V3	35289	0	38481	12	RW	Word	-	0...3	num
V3-dOA	Behavior forced by digital input	V3	35291	0	38481	48	RW	Word	-	0...5	num
V3-PEA	Enable forced behavior from door switch and/or external alarm.	V3	35292	0	38481	192	RW	Word	-	0...3	num

Label	Description	Folder	Val. Par. Address	Val. Filter	Vis. Par. Address	Vis. Filter	R/W	Data Size	CPL	Range	MU
V3-dCO	Compressor activation delay from acknowledgment	V3	35293	0	38481	768	RW	Word	-	0...250	min
V3-dFO	Fan enabling delay from acknowledgment	V3	35294	0	38481	3072	RW	Word	-	0...250	min
V3-ASb	Instrument off active light/auxiliary digital input or key	V3	35320	0	38481	12288	RW	Word	-	0...1	flag
V3-L00	Shared probe	V3	35072	0	38481	49152	RW	Word	-	0...7	num
V3-L01	Distributed viewing (refers to secondary)	V3	35073	0	38482	3	RW	Word	-	0...2	num
V3-L02	Setpoint synchronization	V3	35074	0	38482	12	RW	Word	-	0...1	flag
V3-L03	Defrost synchronization	V3	35075	0	38482	48	RW	Word	-	0...2	num
V3-L04	Inhibit resources at the end of defrost	V3	35076	0	38482	192	RW	Word	-	0...1	flag
V3-L05	Stand-by synchronization	V3	35077	0	38482	768	RW	Word	-	0...1	flag
V3-L06	Lights synchronization	V3	35078	0	38482	3072	RW	Word	-	0...1	flag
V3-L07	Reduced set synchronization	V3	35079	0	38482	12288	RW	Word	-	0...1	flag
V3-L08	AUX synchronization	V3	35080	0	38482	49152	RW	Word	-	0...1	flag
V3-L09	Shared saturation probe	V3	35081	0	38483	3	RW	Word	-	0...1	flag
V3-L10	Resource unlocking timeout during synchronized defrosts	V3	35332	0	38483	12	RW	Word	-	0...250	min
V3-L11	Number of devices connected in Link2	V3	35082	0	38500	48	RW	Word	-	0...8	num
V3-L12	Alarm relay sharing in Link2	V3	35083	0	38500	192	RW	Word	-	0...2	num
V3-L13	Link2 serial frame configuration	V3	35343	0	38499	12288	RW	Word	-	0...1	flag
V3-L14	Force cool mode	V3	35359	0	38502	3	RW	Word	-	0...1	flag
V3-L15	Shared buzzer and alarm silenced via Link2	V3	35339	0	38504	48	RW	Word	-	0...2	num
V3-dcS	Deep cooling setpoint	V3	35266	0	38483	768	RW	Word	Y	-58.0...302	°C/°F
V3-tdc	Deep cooling duration	V3	35267	0	38483	3072	RW	Word	-	0...250	min
V3-dcc	Defrost delay after deep cooling	V3	35268	0	38483	12288	RW	Word	-	0...250	min
V3-ESt	Type of action for the Energy Saving function	V3	35195	0	38483	49152	RW	Word	-	0...8	num
V3-ESF	Night mode activation (Energy Saving)	V3	35263	0	38484	3	RW	Word	-	0...1	flag
V3-Cdt	Door closing time	V3	35264	0	38484	12	RW	Word	-	0...255	min*10
V3-ESo	Low consumption mode disabling timeout (door switch)	V3	35265	0	38484	48	RW	Word	-	0...10	num
V3-OS1	Offset on setpoint 1	V3	35212	0	38484	192	RW	Word	Y	-50.0...50.0	°C/°F
V3-OS2	Offset on setpoint 2	V3	35213	0	38484	768	RW	Word	Y	-50.0...50.0	°C/°F

Label	Description	Folder	Val. Par. Address	Val. Filter	Vis. Par. Address	Vis. Filter	R/W	Data Size	CPL	Range	MU
V3-Od1	Refrigerated cabinets energy saving offset 1	V3	35214	0	38484	3072	RW	Word	Y	-50.0...50.0	°C/°F
V3-Od2	Refrigerated cabinets energy saving offset 2	V3	35215	0	38484	12288	RW	Word	Y	-50.0...50.0	°C/°F
V3-dn1	Differential during energy saving mode 1	V3	35203	0	38484	49152	RW	Word	Y	-58.0...302	°C/°F
V3-dn2	Differential during energy saving mode 2	V3	35204	0	38485	3	RW	Word	Y	-58.0...302	°C/°F
V3-EdH	Weekday energy saving start hour	V3	35189	0	38485	12	RW	Word	-	0...24	hours
V3-Edn	Weekday energy saving start minutes	V3	35190	0	38485	48	RW	Word	-	0...59	min
V3-Edd	Weekday energy saving duration	V3	35191	0	38485	192	RW	Word	-	1...72	hours
V3-EFH	Weekend/holiday energy saving start hour	V3	35192	0	38485	768	RW	Word	-	0...24	hours
V3-EFn	Weekend/holiday energy saving start minutes	V3	35193	0	38485	3072	RW	Word	-	0...59	min
V3-EFd	Weekend/holiday energy saving duration	V3	35194	0	38485	12288	RW	Word	-	1...72	hours
V3-FH	Frame heater probe selection	V3	35295	0	38485	49152	RW	Word	-	0...9	num
V3-FHt	Frame heater period	V3	35297	0	38486	3	RW	Word	-	1...250	s
V3-FH0	Frame heater set	V3	35298	0	38486	12	RW	Word	Y	-58.0...302	°C/°F
V3-FH1	Frame heater offset	V3	35299	0	38486	48	RW	Word	-	0.0...25.0	°C/°F
V3-FH2	Frame heater band	V3	35300	0	38486	192	RW	Word	Y	-58.0...302	°C/°F
V3-FH3	Frame heater minimum percentage/duty-cycle	V3	35301	0	38486	768	RW	Word	-	0...100	%
V3-FH4	Frame heater maximum percentage/day duty-cycle	V3	35302	0	38486	3072	RW	Word	-	0...100	%
V3-FH5	Frame heater maximum percentage/night duty-cycle	V3	35303	0	38486	12288	RW	Word	-	0...100	%
V3-FH6	Frame heater percentage/duty-cycle in defrost	V3	35304	0	38486	49152	RW	Word	-	0...100	%
V3-LOC	Disable terminal	V3	35307	0	38487	3	RW	Word	-	0...1	flag
V3-PS1	Password 1 value	V3	35308	0	38487	12	RW	Word	-	0...250	num
V3-PS2	Password 2 value	V3	35309	0	38487	48	RW	Word	-	0...250	num
V3-ndt	Display with decimal point	V3	35310	0	38487	192	RW	Word	-	0...1	flag
V3-CA1	Analog input 1 calibration	V3	35116	0	38487	768	RW	Word	Y	-30.0...30.0	°C/°F
V3-CA2	Analog input 2 calibration	V3	35117	0	38487	3072	RW	Word	Y	-30.0...30.0	°C/°F
V3-CA3	Analog input 3 calibration	V3	35118	0	38487	12288	RW	Word	Y	-30.0...30.0	°C/°F
V3-CA4	Analog input 4 calibration	V3	35119	0	38487	49152	RW	Word	Y	-30.0...30.0	°C/°F

Label	Description	Folder	Val. Par. Address	Val. Filter	Vis. Par. Address	Vis. Filter	R/W	Data Size	CPL	Range	MU
V3-CA5	Analog input 5 calibration	V3	35120	0	38488	3	RW	Word	Y	-30.0...30.0	°C/°F
V3-CA6	Analog input 6 calibration	V3	35121	0	38488	12	RW	Word	Y	-30.0...30.0	bar/psi
V3-CA7	Analog input 7 calibration	V3	35122	0	38488	48	RW	Word	Y	-30.0...30.0	bar/psi
V3-LdL	Minimum display value	V3	35311	0	38488	192	RW	Word	Y	-58.0...V3-HdL	°C/°F
V3-HdL	Maximum display value	V3	35312	0	38488	768	RW	Word	Y	V3-LdL...302	°C/°F
V3-ddL	Display lock mode during a defrost	V3	35313	0	38488	3072	RW	Word	-	0...2	num
V3-Ldd	Display lock timeout from end of defrost	V3	35314	0	38488	12288	RW	Word	-	0...250	min
V3-dro	Select °C / °F	V3	35315	0	38488	49152	RW	Word	-	0...1	flag
V3-SbP	Pressure unit of measure	V3	35316	0	38489	3	RW	Word	-	0...1	flag
V3-ddd	Select main display value	V3	35317	0	38489	12	RW	Word	-	0...8	num
V3-ddE	Resource displayed on ECHO	V3	35318	0	38489	48	RW	Word	-	0...11	num
V3-rPH	Receiver maximum valve opening %	V3	35269	0	38489	192	RW	Word	-	0...5	num
V3-H00	Select analog input type NTC/PTC	V3	35084	0	38489	768	RW	Word	-	0...2	num
V3-H02	Function activation time from terminal	V3	35319	0	38489	3072	RW	Word	-	0...250	s
V3-H08	Stand-by operating mode	V3	35321	0	38489	12288	RW	Word	-	0...2	num
V3-H11	Digital input 1 configurability and polarity	V3	35087	0	38489	49152	RW	Word	Y	-19...19	num
V3-H12	Digital input 2 configurability and polarity	V3	35088	0	38490	3	RW	Word	Y	-19...19	num
V3-H13	Digital input 3 configurability and polarity	V3	35089	0	38490	12	RW	Word	Y	-19...19	num
V3-H14	Digital input 4 configurability and polarity	V3	35090	0	38490	48	RW	Word	Y	-19...19	num
V3-H15	Digital input 5 configurability and polarity	V3	35091	0	38490	192	RW	Word	Y	-19...19	num
V3-H16	Digital input 6 configurability and polarity	V3	35092	0	38490	768	RW	Word	Y	-19...19	num
V3-H17	Digital input 7 configurability and polarity	V3	35093	0	38490	3072	RW	Word	Y	-19...19	num
V3-H18	Digital input 8 configurability and polarity	V3	35094	0	38490	12288	RW	Word	Y	-19...19	num
V3-i01	Digital input 9 configurability and polarity	V3	35354	0	38501	192	RW	Word	Y	-19...19	num
V3-i02	Digital input 10 configurability and polarity	V3	35355	0	38501	768	RW	Word	Y	-19...19	num
V3-dti	Digital inputs 1 and 2 delay unit of measure	V3	35103	0	38490	49152	RW	Word	-	0...1	flag

Label	Description	Folder	Val. Par. Address	Val. Filter	Vis. Par. Address	Vis. Filter	R/W	Data Size	CPL	Range	MU
V3-d11	D.I. 1 activation indication delay time	V3	35095	0	38491	3	RW	Word	-	0...255	min
V3-d12	D.I. 2 activation indication delay time	V3	35096	0	38491	12	RW	Word	-	0...255	min
V3-d13	D.I. 3 activation indication delay time	V3	35097	0	38491	48	RW	Word	-	0...255	min
V3-d14	D.I. 4 activation indication delay time	V3	35098	0	38491	192	RW	Word	-	0...255	min
V3-d15	D.I. 5 activation indication delay time	V3	35099	0	38491	768	RW	Word	-	0...255	min
V3-d16	D.I. 6 activation indication delay time	V3	35100	0	38491	3072	RW	Word	-	0...255	min
V3-d17	D.I. 7 activation indication delay time	V3	35101	0	38491	12288	RW	Word	-	0...255	min
V3-d18	D.I. 8 activation indication delay time	V3	35102	0	38491	49152	RW	Word	-	0...255	min
V3-01i	D.I. 9 activation indication delay time	V3	35356	0	38501	3072	RW	Word	-	0...255	min
V3-02i	D.I. 10 activation indication delay time	V3	35357	0	38501	12288	RW	Word	-	0...255	min
V3-H21	Configurability of digital output 1	V3	35124	0	38492	3	RW	Word	-	0...19	num
V3-H22	Configurability of digital output 2	V3	35125	0	38492	12	RW	Word	-	0...19	num
V3-H23	Configurability of digital output 3	V3	35126	0	38492	48	RW	Word	-	0...19	num
V3-H24	Configurability of digital output 4	V3	35127	0	38492	192	RW	Word	-	0...19	num
V3-H25	Configurability of digital output 5	V3	35128	0	38492	768	RW	Word	-	0...19	num
V3-H27	Configurability of digital output 7	V3	35130	0	38492	12288	RW	Word	-	0...19	num
V3-H29	Enable buzzer	V3	35131	0	38492	49152	RW	Word	-	0...1	num
V3-d01	Configurability of digital output 8	V3	35347	0	38500	768	RW	Word	-	0...19	num
V3-d02	Configurability of digital output 9	V3	35348	0	38500	3072	RW	Word	-	0...19	num
V3-H31	Configurability of the UP key	V3	35322	0	38493	3	RW	Word	-	0...9	num
V3-H32	Configurability of the DOWN key	V3	35323	0	38493	12	RW	Word	-	0...9	num
V3-H33	Configurability of the ESC key	V3	35324	0	38493	48	RW	Word	-	0...9	num
V3-H34	Configurability of the Free 1 key	V3	35325	0	38493	192	RW	Word	-	0...9	num
V3-H35	Configurability of the Free 2 key	V3	35326	0	38493	768	RW	Word	-	0...9	num
V3-H36	Configurability of the Free 3 key	V3	35327	0	38493	3072	RW	Word	-	0...9	num
V3-H37	Configurability of the Free 4 key	V3	35328	0	38493	12288	RW	Word	-	0...9	num
V3-H41	Configurability of analog input 1	V3	35104	0	38493	49152	RW	Word	-	0...2	num
V3-H42	Configurability of analog input 2	V3	35105	0	38494	3	RW	Word	-	0...2	num
V3-H43	Configurability of analog input 3	V3	35106	0	38494	12	RW	Word	-	0...2	num
V3-H44	Configurability of analog input 4	V3	35107	0	38494	48	RW	Word	-	0...2	num

Label	Description	Folder	Val. Par. Address	Val. Filter	Vis. Par. Address	Vis. Filter	R/W	Data Size	CPL	Range	MU
V3-H45	Configurability of analog input 5	V3	35108	0	38494	192	RW	Word	-	0...2	num
V3-H46	Configurability of analog input 6	V3	35109	0	38494	768	RW	Word	-	0...2	num
V3-H47	Configurability of analog input 7	V3	35110	0	38494	3072	RW	Word	-	0...2	num
V3-H48	Configurability of analog input 8	V3	35358	0	38501	49152	RW	Word	-	0...2	num
V3-H50	Configurability of analog output 1	V3	35132	0	38494	12288	RW	Word	-	0...1	num
V3-H51	Function associated with analog output	V3	35133	0	38494	49152	RW	Word	-	0...3	num
V3-H68	RTC present	V3	35134	0	38495	3	RW	Word	-	0...1	num
V3-H70	Selection of 1st sensor for virtual probe	V3	35112	0	38495	12	RW	Word	-	0...5	num
V3-H71	Selection of 2nd sensor for virtual probe	V3	35113	0	38495	48	RW	Word	-	0...5	num
V3-H72	Day virtual probe calculation %	V3	35114	0	38495	192	RW	Word	-	0...100	%
V3-H73	Night virtual probe calculation %	V3	35115	0	38495	768	RW	Word	-	0...100	%
V3-H74	Selection of 1st sensor for filtered virtual probe	V3	35343	0	38499	49152	RW	Word	-	0...65635	num
V3-H75	Percentage in thousandths of the incoming signal for filtered virtual probe	V3	35344	0	38500	3	RW	Word	-	0...65635	num
V3-H76	Filtered virtual probe offset	V3	35346	0	38500	12	RW	Word	-	0...65635	num
V3-EtY	Selection of electronic expansion valve driver	V3	35329	0	38495	3072	RW	Word	-	0...1	flag
V3-UL	Visibility of parameter transfer function (Device -> UNICARD/MFK)	V3	-	-	38498	3	RW	Word	-	0...3	num
V3-dL	Visibility of parameter transfer function (UNICARD/MFK -> Device)	V3	-	-	38498	12	RW	Word	-	0...3	num
V3-Fr	Visibility of UNICARD/MFK formatting function	V3	-	-	38498	48	RW	Word	-	0...3	num
V3-OHP	Selection of oil temperature probe	V3	35336	0	38498	12288	RW	Word	-	0...8	num
V3-OSP	Oil heater setpoint	V3	35337	0	38498	49152	RW	Word	Y	V3-OLS...V3-OHS	°C/°F
V3-OHd	Oil heater differential	V3	35338	0	38499	3	RW	Word	-	0.1...25.0	°C/°F
V3-OHS	Maximum oil heater setpoint value that can be set	V3	35340	0	38499	48	RW	Word	Y	V3-OLS...302	°C/°F
V3-OLS	Minimum oil heater setpoint value that can be set	V3	35341	0	38499	192	RW	Word	Y	-58.0...V3-OHS	°C/°F
Application 4 parameters											
V4-rE	Regulation type	V4	35580	0	38560	3	RW	Word	-	0...6	num
V4-rP1	Thermostat regulation probe 1	V4	35581	0	38560	12	RW	Word	-	0...8	num
V4-rP2	Thermostat regulation probe 2	V4	35582	0	38560	48	RW	Word	-	0...9	num

Label	Description	Folder	Val. Par. Address	Val. Filter	Vis. Par. Address	Vis. Filter	R/W	Data Size	CPL	Range	MU
V4-SP1	Regulation setpoint 1	V4	35583	0	38560	192	RW	Word	Y	V4-LS1...V4-HS1	°C/°F
V4-dF1	Setpoint differential 1	V4	35584	0	38560	768	RW	Word	Y	-58.0...302	°C/°F
V4-SP2	Regulation setpoint 2	V4	35585	0	38560	3072	RW	Word	Y	V4-LS2...V4-HS2	°C/°F
V4-dF2	Setpoint differential 2	V4	35586	0	38560	12288	RW	Word	Y	-58.0...302	°C/°F
V4-Stt	Differential management mode	V4	35589	0	38560	49152	RW	Word	-	0...1	flag
V4-HS1	Maximum value that can be set for Setpoint 1	V4	35592	0	38561	3	RW	Word	Y	V4-LS1...V4-HdL	°C/°F
V4-LS1	Minimum value that can be set for Setpoint 1	V4	35593	0	38561	12	RW	Word	Y	V4-LdL...V4-HS1	°C/°F
V4-HS2	Maximum value that can be set for Setpoint 2	V4	35594	0	38561	48	RW	Word	Y	V4-LS2...V4-HdL	°C/°F
V4-LS2	Minimum value that can be set for Setpoint 2	V4	35595	0	38561	192	RW	Word	Y	V4-LdL...V4-HS2	°C/°F
V4-HC1	Setpoint 1 operating mode (Heating/Cooling)	V4	35590	0	38561	768	RW	Word	-	0...1	flag
V4-HC2	Setpoint 2 operating mode (Heating/Cooling)	V4	35591	0	38561	3072	RW	Word	-	0...1	flag
V4-Cit	Minimum compressor output activation time	V4	35600	0	38562	12	RW	Word	-	0...250	min
V4-CAt	Maximum compressor output activation time	V4	35601	0	38562	48	RW	Word	-	0...250	min
V4-Ont	Compressor output ON time if regulation probe is faulty	V4	35606	0	38561	49152	RW	Word	-	0...250	min
V4-OFt	Compressor output OFF time if regulation probe is faulty	V4	35607	0	38562	3	RW	Word	-	0...250	min
V4-dOn	Compressor output activation delay from call	V4	35602	0	38562	192	RW	Word	-	0...250	s
V4-dOF	Compressor output activation delay from switch-off	V4	35603	0	38562	768	RW	Word	-	0...250	min
V4-dbi	Delay between two consecutive compressor output power-ons	V4	35604	0	38562	3072	RW	Word	-	0...250	min
V4-OdO	Output activation delay at startup	V4	35605	0	38562	12288	RW	Word	-	0...250	min
V4-CFP	Condenser pre-ventilation time in Heat/Cool	V4	35689	0	38563	12	RW	Word	-	0...255	s
V4-CFd	Condenser fan cut-out during defrosting.	V4	35690	0	38563	48	RW	Word	-	0...1	flag
V4-OF1	Remote offset	V4	35611	0	38563	192	RW	Word	Y	-50.0...50.0	°C/°F
V4-Pot	Pump down time	V4	35717	0	38594	192	RW	Word	-	0...250	s
V4-SS1	Compressor softstart: advance hotgas valve opening	V4	35718	0	38594	768	RW	Word	-	0...250	s
V4-SS2	Compressor softstart: delay hotgas valve closing	V4	35719	0	38594	3072	RW	Word	-	0...250	s

Label	Description	Folder	Val. Par. Address	Val. Filter	Vis. Par. Address	Vis. Filter	R/W	Data Size	CPL	Range	MU
V4-dP1	Select defrost probe 1	V4	35612	0	38563	768	RW	Word	-	0...8	num
V4-dP2	Defrost probe 2 selection	V4	35613	0	38563	3072	RW	Word	-	0...8	num
V4-dty	Type of defrost	V4	35616	0	38563	12288	RW	Word	-	0...4	num
V4-dFt	Dual evaporator defrost activation mode	V4	35614	0	38563	49152	RW	Word	-	0...2	num
V4-dit	Interval between defrosts	V4	35617	0	38564	768	RW	Word	-	0...250	hours
V4-dt1	Unit of measure for defrost intervals	V4	35620	0	38564	3	RW	Word	-	0...2	num
V4-dt2	Unit of measure for defrost duration	V4	35621	0	38564	12	RW	Word	-	0...2	num
V4-dCt	Defrost interval count mode	V4	35615	0	38564	48	RW	Word	-	0...5	num
V4-dOH	Defrost cycle activation delay from the call	V4	35622	0	38564	192	RW	Word	-	0...250	min
V4-dE1	Evaporator 1 defrost maximum duration	V4	35618	0	38564	3072	RW	Word	-	1...250	min
V4-dE2	Evaporator 2 defrost maximum duration	V4	35619	0	38564	12288	RW	Word	-	1...250	min
V4-dS1	Evaporator 1 defrost end temperature	V4	35624	0	38564	49152	RW	Word	Y	-58.0...302	°C/°F
V4-dS2	Evaporator 2 defrost end temperature	V4	35625	0	38565	3	RW	Word	Y	-58.0...302	°C/°F
V4-dSS	Temperature threshold for starting defrost	V4	35623	0	38565	12	RW	Word	Y	-58.0...302	°C/°F
V4-dPO	Defrost activation request at power-on	V4	35626	0	38565	48	RW	Word	-	0...1	flag
V4-tcd	Compressor output activation/deactivation time before a defrost	V4	35627	0	38565	192	RW	Word	Y	-60...60	min
V4-ndE	minimum defrost duration time	V4	35628	0	38565	768	RW	Word	-	0...250	min
V4-PdC	Hot gas extraction time at the end of the defrost	V4	35629	0	38565	3072	RW	Word	-	0...250	min
V4-tPd	Pump down time before defrost start	V4	35631	0	38565	12288	RW	Word	-	0...255	min
V4-dPH	Regular defrost start hour	V4	35570	0	38565	49152	RW	Word	-	0...24	hours
V4-dPn	Regular defrost start minutes	V4	35571	0	38566	3	RW	Word	-	0...59	min
V4-dPd	Regular defrost interval duration	V4	35572	0	38566	12	RW	Word	-	1...7	day
V4-Fd1	1st weekend/holiday day	V4	35519	0	38566	48	RW	Word	-	0...7	num
V4-Fd2	2nd weekend/holiday day	V4	35520	0	38566	192	RW	Word	-	0...7	num
V4-Edt	Timeout and defrost end temperature specific to each event	V4	35521	0	38566	768	RW	Word	-	0...1	flag
V4-Fdn	Weekday defrost number	V4	35469	0	38600	3	RW	Word	-	0...250	num
V4-FFn	Weekend/holiday defrost number	V4	35470	0	38600	12	RW	Word	-	0...250	num
V4-PrH	Basin heater pre-activation time	V4	35726	0	38595	3072	RW	Word	-	0...255	min
V4-d1H	Weekday defrost no. 1 start hour	V4	35522	0	38566	3072	RW	Word	-	0...24	hours

Label	Description	Folder	Val. Par. Address	Val. Filter	Vis. Par. Address	Vis. Filter	R/W	Data Size	CPL	Range	MU
V4-d1n	Weekday defrost no. 1 start minute	V4	35523	0	38566	12288	RW	Word	-	0...59	min
V4-d1t	1st weekday defrost duration	V4	35524	0	38566	49152	RW	Word	-	0...250	min
V4-d1S	1st weekday defrost end temperature	V4	35525	0	38567	3	RW	Word	Y	-58.0...302	°C/°F
V4-d2H	Weekday defrost no. 2 start hour	V4	35526	0	38567	12	RW	Word	-	V4-d1H...24	hours
V4-d2n	Weekday defrost no. 2 start minutes	V4	35527	0	38567	48	RW	Word	-	0...59	min
V4-d2t	2nd weekday defrost duration	V4	35528	0	38567	192	RW	Word	-	0...250	min
V4-d2S	2nd weekday defrost end temperature	V4	35529	0	38567	768	RW	Word	Y	-58.0...302	°C/°F
V4-d3H	Weekday defrost no. 3 start hour	V4	35530	0	38567	3072	RW	Word	-	V4-d2H...24	hours
V4-d3n	Weekday defrost no. 3 start minutes	V4	35531	0	38567	12288	RW	Word	-	0...59	min
V4-d3t	3rd weekday defrost duration	V4	35532	0	38567	49152	RW	Word	-	0...250	min
V4-d3S	3rd weekday defrost end temperature	V4	35533	0	38568	3	RW	Word	Y	-58.0...302	°C/°F
V4-d4H	Weekday defrost no. 4 start hour	V4	35534	0	38568	12	RW	Word	-	V4-d3H...24	hours
V4-d4n	Weekday defrost no. 4 start minutes	V4	35535	0	38568	48	RW	Word	-	0...59	min
V4-d4t	4th weekday defrost duration	V4	35536	0	38568	192	RW	Word	-	0...250	min
V4-d4S	4th weekday defrost end temperature	V4	35537	0	38568	768	RW	Word	Y	-58.0...302	°C/°F
V4-d5H	Weekday defrost no. 5 start hour	V4	35538	0	38568	3072	RW	Word	-	V4-d4H...24	hours
V4-d5n	Weekday defrost no. 5 start minutes	V4	35539	0	38568	12288	RW	Word	-	0...59	min
V4-d5t	5th weekday defrost duration	V4	35540	0	38568	49152	RW	Word	-	0...250	min
V4-d5S	5th weekday defrost end temperature	V4	35541	0	38569	3	RW	Word	Y	-58.0...302	°C/°F
V4-d6H	Weekday defrost no. 6 start hour	V4	35542	0	38569	12	RW	Word	-	V4-d5H...24	hours
V4-d6n	Weekday defrost no. 6 start minutes	V4	35543	0	38569	48	RW	Word	-	0...59	min
V4-d6t	6th weekday defrost duration	V4	35544	0	38569	192	RW	Word	-	0...250	min
V4-d6S	6th weekday defrost end temperature	V4	35545	0	38569	768	RW	Word	Y	-58.0...302	°C/°F
V4-F1H	Weekend/holiday defrost no. 1 start hour	V4	35546	0	38569	3072	RW	Word	-	0...24	hours
V4-F1n	Weekend/holiday defrost no. 1 start minute	V4	35547	0	38569	12288	RW	Word	-	0...59	min
V4-F1t	1st weekend/holiday defrost duration	V4	35548	0	38569	49152	RW	Word	-	0...250	min
V4-F1S	1st weekend/holiday defrost end temperature	V4	35549	0	38570	3	RW	Word	Y	-58.0...302	°C/°F
V4-F2H	Weekend/holiday defrost no. 2 start hour	V4	35550	0	38570	12	RW	Word	-	V4-F1H...24	hours
V4-F2n	Weekend/holiday defrost no. 2 start minutes	V4	35551	0	38570	48	RW	Word	-	0...59	min

Label	Description	Folder	Val. Par. Address	Val. Filter	Vis. Par. Address	Vis. Filter	R/W	Data Size	CPL	Range	MU
V4-F2t	2nd weekend/holiday defrost duration	V4	35552	0	38570	192	RW	Word	-	0...250	min
V4-F2S	2nd weekend/holiday defrost end temperature	V4	35553	0	38570	768	RW	Word	Y	-58.0...302	°C/°F
V4-F3H	Weekend/holiday defrost no. 3 start hour	V4	35554	0	38570	3072	RW	Word	-	V4-F2H...24	hours
V4-F3n	Weekend/holiday defrost no. 3 start minutes	V4	35555	0	38570	12288	RW	Word	-	0...59	min
V4-F3t	3rd weekend/holiday defrost duration	V4	35556	0	38570	49152	RW	Word	-	0...250	min
V4-F3S	3rd weekend/holiday defrost end temperature	V4	35557	0	38571	3	RW	Word	Y	-58.0...302	°C/°F
V4-F4H	Weekend/holiday defrost no. 4 start hour	V4	35558	0	38571	12	RW	Word	-	V4-F3H...24	hours
V4-F4n	Weekend/holiday defrost no. 4 start minutes	V4	35559	0	38571	48	RW	Word	-	0...59	min
V4-F4t	4th weekend/holiday defrost duration	V4	35560	0	38571	192	RW	Word	-	0...250	min
V4-F4S	4th weekend/holiday defrost end temperature	V4	35561	0	38571	768	RW	Word	Y	-58.0...302	°C/°F
V4-F5H	Weekend/holiday defrost no. 5 start hour	V4	35562	0	38571	3072	RW	Word	-	V4-F4H...24	hours
V4-F5n	Weekend/holiday defrost no. 5 start minutes	V4	35563	0	38571	12288	RW	Word	-	0...59	min
V4-F5t	5th weekend/holiday defrost duration	V4	35564	0	38571	49152	RW	Word	-	0...250	min
V4-F5S	5th weekend/holiday defrost end temperature	V4	35565	0	38572	3	RW	Word	Y	-58.0...302	°C/°F
V4-F6H	Weekend/holiday defrost no. 6 start hour	V4	35566	0	38572	12	RW	Word	-	V4-F5H...24	hours
V4-F6n	Weekend/holiday defrost no. 6 start minutes	V4	35567	0	38572	48	RW	Word	-	0...59	min
V4-F6t	6th weekend/holiday defrost duration	V4	35568	0	38572	192	RW	Word	-	0...250	min
V4-F6S	6th weekend/holiday defrost end temperature	V4	35569	0	38572	768	RW	Word	Y	-58.0...302	°C/°F
V4-FP1	Selection of evaporator fan probe in normal mode	V4	35632	0	38572	3072	RW	Word	-	0...7	num
V4-FP2	Selection of evaporator fan probe in defrost	V4	35633	0	38572	12288	RW	Word	-	0...7	num
V4-FPt	FSt parameter mode (absolute or relative)	V4	35634	0	38572	49152	RW	Word	-	0...1	flag
V4-FSt	Evaporator fan disabling temperature	V4	35635	0	38573	3	RW	Word	Y	-58.0...302	°C/°F
V4-FAd	Evaporator fan trigger differential	V4	35636	0	38573	12	RW	Word	-	0.1...25.0	°C/°F
V4-Fdt	Evaporator fan activation delay time after a defrost cycle	V4	35637	0	38573	48	RW	Word	-	0...250	min
V4-dt	Dripping time	V4	35642	0	38573	192	RW	Word	-	0...250	min
V4-dFd	Evaporator fan cut-out during defrost	V4	35640	0	38573	768	RW	Word	-	0...1	flag

Label	Description	Folder	Val. Par. Address	Val. Filter	Vis. Par. Address	Vis. Filter	R/W	Data Size	CPL	Range	MU
V4-FCO	Evaporator fan status with compressor output Off	V4	35639	0	38573	3072	RW	Word	-	0...4	num
V4-Fod	Evaporator fan status with door open	V4	35641	0	38573	12288	RW	Word	-	0...1	flag
V4-FdC	Evaporator fan shutoff delay after compressor deactivation	V4	35638	0	38573	49152	RW	Word	-	0...250	min
V4-FOn	Evaporator fan On time in cyclical regulator mode	V4	35643	0	38574	3	RW	Word	-	0...250	min
V4-FOF	Evaporator fan Off time in cyclical regulator mode	V4	35644	0	38574	12	RW	Word	-	0...250	min
V4-Fnn	Evaporator fan ON time in night mode (duty cycle)	V4	35645	0	38574	48	RW	Word	-	0...250	min
V4-FnF	Evaporator fan OFF time in night mode (duty cycle)	V4	35646	0	38574	192	RW	Word	-	0...250	min
V4-FE1	Variable speed fan probe selection	V4	35745	0	38598	48	RW	Word	-	0...12	num
V4-FEt	Setpoint mode	V4	35746	0	38598	192	RW	Word	-	0...1	flag
V4-FES	Setpoint	V4	35747	0	38598	768	RW	Word	Y	-58...302	°C/°F
V4-FEd	Band	V4	35748	0	38598	3072	RW	Word	-	0.1...50.0	°C/°F
V4-FEu	Cut-off band	V4	35749	0	38598	12288	RW	Word	-	0.0...25.0	°C/°F
V4-FEC	Cut-off differential	V4	35750	0	38598	49152	RW	Word	-	0.1...25.0	°C/°F
V4-FEr	Fan shutoff delay after compressor deactivation	V4	35751	0	38599	3	RW	Word	-	0...250	min
V4-FE2	Minimum day percentage	V4	35752	0	38599	12	RW	Word	-	0...100	%
V4-FE3	Maximum day percentage with compressor on	V4	35753	0	38599	48	RW	Word	-	0...100	%
V4-FE4	Maximum day percentage with compressor off	V4	35754	0	38599	192	RW	Word	-	0...100	%
V4-FE5	Minimum night percentage	V4	35755	0	38599	768	RW	Word	-	0...100	%
V4-FE6	Maximum night percentage with compressor on	V4	35756	0	38599	3072	RW	Word	-	0...100	%
V4-FE7	Maximum night percentage with compressor off	V4	35757	0	38599	12288	RW	Word	-	0...100	%
V4-FE8	Percentage during defrost	V4	35758	0	38599	49152	RW	Word	-	0...100	%
V4-FE9	Percentage in the event of probe error	V4	35759	0	38611	12	RW	Word	-	0...100	%
V4-FEA	Maximum pick-up speed	V4	35760	0	38611	48	RW	Word	-	0...100	%
V4-FEb	Fan pick-up time	V4	35761	0	38611	192	RW	Word	-	0...250	s
V4-FEP	Fan forcing period at pick-up speed	V4	35762	0	38611	768	RW	Word	-	0...250	min
V4-rA1	Temperature alarm probe 1 selection	V4	35660	0	38574	768	RW	Word	-	0...7	num

Label	Description	Folder	Val. Par. Address	Val. Filter	Vis. Par. Address	Vis. Filter	R/W	Data Size	CPL	Range	MU
V4-rA2	Temperature alarm probe 2 selection	V4	35661	0	38574	3072	RW	Word	-	0...7	num
V4-Att	Alarm mode (absolute or relative)	V4	35662	0	38574	12288	RW	Word	-	0...1	flag
V4-AFd	Alarm activation differential	V4	35663	0	38574	49152	RW	Word	-	0.1...25.0	°C/°F
V4-HA1	Maximum alarm 1 threshold	V4	35664	0	38575	3	RW	Word	Y	V4-LA1...302	°C/°F
V4-LA1	Minimum alarm 1 threshold	V4	35665	0	38575	12	RW	Word	Y	-58.0...V4-HA1	°C/°F
V4-HA2	Maximum alarm 2 threshold	V4	35666	0	38575	48	RW	Word	Y	V4-LA2...302	°C/°F
V4-LA2	Minimum alarm 2 threshold	V4	35667	0	38575	192	RW	Word	Y	-58.0...V4-HA2	°C/°F
V4-PAO	Temperature alarm exclusion time from power-on	V4	35668	0	38575	768	RW	Word	-	0...10	hours
V4-dAO	Exclusion time for temperature alarms after a defrost cycle	V4	35670	0	38575	3072	RW	Word	-	0...250	min
V4-OAO	High and low temperature alarms exclusion time after closing the door	V4	35669	0	38575	12288	RW	Word	-	0...10	hours
V4-tdO	Door open alarm exclusion time	V4	35714	0	38575	49152	RW	Word	-	0...250	min
V4-tA1	Probe 1 High/Minimum Alarm Delay	V4	35671	0	38576	3	RW	Word	-	0...250	min
V4-tA2	Probe 2 High/Minimum Alarm Delay	V4	35672	0	38576	12	RW	Word	-	0...250	min
V4-dAt	Defrost ended due to timeout alarm signaling	V4	35630	0	38576	48	RW	Word	-	0...1	flag
V4-EAL	Regulators inhibited by external alarm	V4	35674	0	38576	192	RW	Word	-	0...2	num
V4-rA3	Sets the input used by the two thresholds alarm regulator	V4	35733	0	38596	12288	RW	Word	-	0...8	num
V4-ALL	Low alarm threshold (warning)	V4	35734	0	38596	49152	RW	Word	-	0.0...V4-ALH	num
V4-ALH	High alarm threshold (alarm)	V4	35735	0	38597	3	RW	Word	-	V4-ALL...100	num
V4-dAL	2 thresholds alarm regulator differential	V4	35736	0	38597	12	RW	Word	-	0.1...100	°C/°F
V4-AL1	Minimum persistence time above the ALL threshold due to alarm activation	V4	35737	0	38597	48	RW	Word	-	0...250	min
V4-AL2	Minimum persistence time above the ALH threshold due to alarm activation	V4	35744	0	38598	12	RW	Word	-	0...250	min
V4-tP	Enables alarm acknowledgment with any key	V4	35715	0	38576	768	RW	Word	-	0...1	flag
V4-Art	Regular watchdog alarm activation period	V4	35659	0	38576	3072	RW	Word	-	0...250	min*10
V4-ttA	Manage temperature alarms with door open.	V4	35763	0	38602	3072	RW	Word	-	0...1	flag
V4-dSd	Enable light relay from door switch	V4	35656	0	38576	12288	RW	Word	-	0...1	flag
V4-dLt	Light relay off delay from door closure	V4	35657	0	38576	49152	RW	Word	-	0...250	min

Label	Description	Folder	Val. Par. Address	Val. Filter	Vis. Par. Address	Vis. Filter	R/W	Data Size	CPL	Range	MU
V4-OFL	Enable cold room lights off via key during the delay set in parameter dLt	V4	35658	0	38577	3	RW	Word	-	0...1	flag
V4-dOd	Enable utility shutoff upon door switch activation	V4	35673	0	38577	12	RW	Word	-	0...3	num
V4-dOA	Behavior forced by digital input	V4	35675	0	38577	48	RW	Word	-	0...5	num
V4-PEA	Enable forced behavior from door switch and/or external alarm.	V4	35676	0	38577	192	RW	Word	-	0...3	num
V4-dCO	Compressor activation delay from acknowledgment	V4	35677	0	38577	768	RW	Word	-	0...250	min
V4-dFO	Fan enabling delay from acknowledgment	V4	35678	0	38577	3072	RW	Word	-	0...250	min
V4-ASb	Instrument off active light/auxiliary digital input or key	V4	35704	0	38577	12288	RW	Word	-	0...1	flag
V4-L00	Shared probe	V4	35456	0	38577	49152	RW	Word	-	0...7	num
V4-L01	Distributed viewing (refers to secondary)	V4	35457	0	38578	3	RW	Word	-	0...2	num
V4-L02	Setpoint synchronization	V4	35458	0	38578	12	RW	Word	-	0...1	flag
V4-L03	Defrost synchronization	V4	35459	0	38578	48	RW	Word	-	0...2	num
V4-L04	Inhibit resources at the end of defrost	V4	35460	0	38578	192	RW	Word	-	0...1	flag
V4-L05	Stand-by synchronization	V4	35461	0	38578	768	RW	Word	-	0...1	flag
V4-L06	Lights synchronization	V4	35462	0	38578	3072	RW	Word	-	0...1	flag
V4-L07	Reduced set synchronization	V4	35463	0	38578	12288	RW	Word	-	0...1	flag
V4-L08	AUX synchronization	V4	35464	0	38578	49152	RW	Word	-	0...1	flag
V4-L09	Shared saturation probe	V4	35465	0	38579	3	RW	Word	-	0...1	flag
V4-L10	Resource unlocking timeout during synchronized defrosts	V4	35716	0	38579	12	RW	Word	-	0...250	min
V4-L11	Number of devices connected in Link2	V4	35466	0	38596	48	RW	Word	-	0...8	num
V4-L12	Alarm relay sharing in Link2	V4	35467	0	38596	192	RW	Word	-	0...2	num
V4-L13	Link2 serial frame configuration	V4	35727	0	38595	12288	RW	Word	-	0...1	flag
V4-L14	Force cool mode	V4	35743	0	38598	3	RW	Word	-	0...1	flag
V4-L15	Shared buzzer and alarm silenced via Link2	V4	33035	0	38184	48	RW	Word	-	0...2	num
V4-dcS	Deep cooling setpoint	V4	35650	0	38579	768	RW	Word	Y	-58.0...302	°C/°F
V4-tdc	Deep cooling duration	V4	35651	0	38579	3072	RW	Word	-	0...250	min
V4-dcc	Defrost delay after deep cooling	V4	35652	0	38579	12288	RW	Word	-	0...250	min
V4-ESt	Type of action for the Energy Saving function	V4	35579	0	38579	49152	RW	Word	-	0...8	num

Label	Description	Folder	Val. Par. Address	Val. Filter	Vis. Par. Address	Vis. Filter	R/W	Data Size	CPL	Range	MU
V4-ESF	Night mode activation (Energy Saving)	V4	35647	0	38580	3	RW	Word	-	0...1	flag
V4-Cdt	Door closing time	V4	35648	0	38580	12	RW	Word	-	0...255	min*10
V4-ESo	Low consumption mode disabling timeout (door switch)	V4	35649	0	38580	48	RW	Word	-	0...10	num
V4-OS1	Offset on setpoint 1	V4	35596	0	38580	192	RW	Word	Y	-50.0...50.0	°C/°F
V4-OS2	Offset on setpoint 2	V4	35597	0	38580	768	RW	Word	Y	-50.0...50.0	°C/°F
V4-Od1	Refrigerated cabinets energy saving offset 1	V4	35598	0	38580	3072	RW	Word	Y	-50.0...50.0	°C/°F
V4-Od2	Refrigerated cabinets energy saving offset 2	V4	35599	0	38580	12288	RW	Word	Y	-50.0...50.0	°C/°F
V4-dn1	Differential during energy saving mode 1	V4	35587	0	38580	49152	RW	Word	Y	-58.0...302	°C/°F
V4-dn2	Differential during energy saving mode 2	V4	35588	0	38581	3	RW	Word	Y	-58.0...302	°C/°F
V4-EdH	Weekday energy saving start hour	V4	35573	0	38581	12	RW	Word	-	0...24	hours
V4-Edn	Weekday energy saving start minutes	V4	35574	0	38581	48	RW	Word	-	0...59	min
V4-Edd	Weekday energy saving duration	V4	35575	0	38581	192	RW	Word	-	1...72	hours
V4-EFH	Weekend/holiday energy saving start hour	V4	35576	0	38581	768	RW	Word	-	0...24	hours
V4-EFn	Weekend/holiday energy saving start minutes	V4	35577	0	38581	3072	RW	Word	-	0...59	min
V4-EFd	Weekend/holiday energy saving duration	V4	35578	0	38581	12288	RW	Word	-	1...72	hours
V4-FH	Frame heater probe selection	V4	35679	0	38581	49152	RW	Word	-	0...9	num
V4-FHt	Frame heater period	V4	35681	0	38582	3	RW	Word	-	1...250	s
V4-FH0	Frame heater set	V4	35682	0	38582	12	RW	Word	Y	-58.0...302	°C/°F
V4-FH1	Frame heater offset	V4	35683	0	38582	48	RW	Word	-	0.0...25.0	°C/°F
V4-FH2	Frame heater band	V4	35684	0	38582	192	RW	Word	Y	-58.0...302	°C/°F
V4-FH3	Frame heater minimum percentage/duty-cycle	V4	35685	0	38582	768	RW	Word	-	0...100	%
V4-FH4	Frame heater maximum percentage/day duty-cycle	V4	35686	0	38582	3072	RW	Word	-	0...100	%
V4-FH5	Frame heater maximum percentage/night duty-cycle	V4	35687	0	38582	12288	RW	Word	-	0...100	%
V4-FH6	Frame heater percentage/duty-cycle in defrost	V4	35688	0	38582	49152	RW	Word	-	0...100	%
V4-LOC	Disable terminal	V4	35691	0	38583	3	RW	Word	-	0...1	flag
V4-PS1	Password 1 value	V4	35692	0	38583	12	RW	Word	-	0...250	num

Label	Description	Folder	Val. Par. Address	Val. Filter	Vis. Par. Address	Vis. Filter	R/W	Data Size	CPL	Range	MU
V4-PS2	Password 2 value	V4	35693	0	38583	48	RW	Word	-	0...250	num
V4-ndt	Display with decimal point	V4	35694	0	38583	192	RW	Word	-	0...1	flag
V4-CA1	Analog input 1 calibration	V4	35500	0	38583	768	RW	Word	Y	-30.0...30.0	°C/°F
V4-CA2	Analog input 2 calibration	V4	35501	0	38583	3072	RW	Word	Y	-30.0...30.0	°C/°F
V4-CA3	Analog input 3 calibration	V4	35502	0	38583	12288	RW	Word	Y	-30.0...30.0	°C/°F
V4-CA4	Analog input 4 calibration	V4	35503	0	38583	49152	RW	Word	Y	-30.0...30.0	°C/°F
V4-CA5	Analog input 5 calibration	V4	35504	0	38584	3	RW	Word	Y	-30.0...30.0	°C/°F
V4-CA6	Analog input 6 calibration	V4	35505	0	38584	12	RW	Word	Y	-30.0...30.0	bar/psi
V4-CA7	Analog input 7 calibration	V4	35506	0	38584	48	RW	Word	Y	-30.0...30.0	bar/psi
V4-LdL	Minimum display value	V4	35695	0	38584	192	RW	Word	Y	-58.0...V4-HdL	°C/°F
V4-HdL	Maximum display value	V4	35696	0	38584	768	RW	Word	Y	V4-LdL...302	°C/°F
V4-ddL	Display lock mode during a defrost	V4	35697	0	38584	3072	RW	Word	-	0...2	num
V4-Ldd	Display lock timeout from end of defrost	V4	35698	0	38584	12288	RW	Word	-	0...250	min
V4-dro	Select °C / °F	V4	35699	0	38584	49152	RW	Word	-	0...1	flag
V4-SbP	Pressure unit of measure	V4	35700	0	38585	3	RW	Word	-	0...1	flag
V4-ddd	Select main display value	V4	35701	0	38585	12	RW	Word	-	0...8	num
V4-ddE	Resource displayed on ECHO	V4	35702	0	38585	48	RW	Word	-	0...11	num
V4-rPH	Receiver maximum valve opening %	V4	35653	0	38585	192	RW	Word	-	0...5	num
V4-H00	Select analog input type NTC/PTC	V4	35468	0	38585	768	RW	Word	-	0...2	num
V4-H02	Function activation time from terminal	V4	35703	0	38585	3072	RW	Word	-	0...250	s
V4-H08	Stand-by operating mode	V4	35705	0	38585	12288	RW	Word	-	0...2	num
V4-H11	Digital input 1 configurability and polarity	V4	35471	0	38585	49152	RW	Word	Y	-19...19	num
V4-H12	Digital input 2 configurability and polarity	V4	35472	0	38586	3	RW	Word	Y	-19...19	num
V4-H13	Digital input 3 configurability and polarity	V4	35473	0	38586	12	RW	Word	Y	-19...19	num
V4-H14	Digital input 4 configurability and polarity	V4	35474	0	38586	48	RW	Word	Y	-19...19	num
V4-H15	Digital input 5 configurability and polarity	V4	35475	0	38586	192	RW	Word	Y	-19...19	num
V4-H16	Digital input 6 configurability and polarity	V4	35476	0	38586	768	RW	Word	Y	-19...19	num

Label	Description	Folder	Val. Par. Address	Val. Filter	Vis. Par. Address	Vis. Filter	R/W	Data Size	CPL	Range	MU
V4-H17	Digital input 7 configurability and polarity	V4	35477	0	38586	3072	RW	Word	Y	-19...19	num
V4-H18	Digital input 8 configurability and polarity	V4	35478	0	38586	12288	RW	Word	Y	-19...19	num
V4-i01	Digital input 9 configurability and polarity	V4	35738	0	38597	192	RW	Word	Y	-19...19	num
V4-i02	Digital input 10 configurability and polarity	V4	35739	0	38597	768	RW	Word	Y	-19...19	num
V4-dti	Digital inputs 1 and 2 delay unit of measure	V4	35487	0	38586	49152	RW	Word	-	0...1	flag
V4-d11	D.I. 1 activation indication delay time	V4	35479	0	38587	3	RW	Word	-	0...255	min
V4-d12	D.I. 2 activation indication delay time	V4	35480	0	38587	12	RW	Word	-	0...255	min
V4-d13	D.I. 3 activation indication delay time	V4	35481	0	38587	48	RW	Word	-	0...255	min
V4-d14	D.I. 4 activation indication delay time	V4	35482	0	38587	192	RW	Word	-	0...255	min
V4-d15	D.I. 5 activation indication delay time	V4	35483	0	38587	768	RW	Word	-	0...255	min
V4-d16	D.I. 6 activation indication delay time	V4	35484	0	38587	3072	RW	Word	-	0...255	min
V4-d17	D.I. 7 activation indication delay time	V4	35485	0	38587	12288	RW	Word	-	0...255	min
V4-d18	D.I. 8 activation indication delay time	V4	35486	0	38587	49152	RW	Word	-	0...255	min
V4-01i	D.I. 9 activation indication delay time	V4	35740	0	38597	3072	RW	Word	-	0...255	min
V4-02i	D.I. 10 activation indication delay time	V4	35741	0	38597	12288	RW	Word	-	0...255	min
V4-H21	Configurability of digital output 1	V4	35508	0	38588	3	RW	Word	-	0...19	num
V4-H22	Configurability of digital output 2	V4	35509	0	38588	12	RW	Word	-	0...19	num
V4-H23	Configurability of digital output 3	V4	35510	0	38588	48	RW	Word	-	0...19	num
V4-H24	Configurability of digital output 4	V4	35511	0	38588	192	RW	Word	-	0...19	num
V4-H25	Configurability of digital output 5	V4	35512	0	38588	768	RW	Word	-	0...19	num
V4-H27	Configurability of digital output 7	V4	35514	0	38588	12288	RW	Word	-	0...19	num
V4-H29	Enable buzzer	V4	35515	0	38588	49152	RW	Word	-	0...1	num
V4-d01	Configurability of digital output 8	V4	35731	0	38596	768	RW	Word	-	0...19	num
V4-d02	Configurability of digital output 9	V4	35732	0	38596	3072	RW	Word	-	0...19	num
V4-H31	Configurability of the UP key	V4	35706	0	38589	3	RW	Word	-	0...9	num
V4-H32	Configurability of the DOWN key	V4	35707	0	38589	12	RW	Word	-	0...9	num
V4-H33	Configurability of the ESC key	V4	35708	0	38589	48	RW	Word	-	0...9	num
V4-H34	Configurability of the Free 1 key	V4	35709	0	38589	192	RW	Word	-	0...9	num

Label	Description	Folder	Val. Par. Address	Val. Filter	Vis. Par. Address	Vis. Filter	R/W	Data Size	CPL	Range	MU
V4-H35	Configurability of the Free 2 key	V4	35710	0	38589	768	RW	Word	-	0...9	num
V4-H36	Configurability of the Free 3 key	V4	35711	0	38589	3072	RW	Word	-	0...9	num
V4-H37	Configurability of the Free 4 key	V4	35712	0	38589	12288	RW	Word	-	0...9	num
V4-H41	Configurability of analog input 1	V4	35488	0	38589	49152	RW	Word	-	0...2	num
V4-H42	Configurability of analog input 2	V4	35489	0	38590	3	RW	Word	-	0...2	num
V4-H43	Configurability of analog input 3	V4	35490	0	38590	12	RW	Word	-	0...2	num
V4-H44	Configurability of analog input 4	V4	35491	0	38590	48	RW	Word	-	0...2	num
V4-H45	Configurability of analog input 5	V4	35492	0	38590	192	RW	Word	-	0...2	num
V4-H46	Configurability of analog input 6	V4	35493	0	38590	768	RW	Word	-	0...2	num
V4-H47	Configurability of analog input 7	V4	35494	0	38590	3072	RW	Word	-	0...2	num
V4-H48	Configurability of analog input 8	V4	35742	0	38597	49152	RW	Word	-	0...2	num
V4-H50	Configurability of analog output 1	V4	35516	0	38590	12288	RW	Word	-	0...1	num
V4-H51	Function associated with analog output	V4	35517	0	38590	49152	RW	Word	-	0...3	num
V4-H68	RTC present	V4	35518	0	38591	3	RW	Word	-	0...1	num
V4-H70	Selection of 1st sensor for virtual probe	V4	35496	0	38591	12	RW	Word	-	0...5	num
V4-H71	Selection of 2nd sensor for virtual probe	V4	35497	0	38591	48	RW	Word	-	0...5	num
V4-H72	Day virtual probe calculation %	V4	35498	0	38591	192	RW	Word	-	0...100	%
V4-H73	Night virtual probe calculation %	V4	35499	0	38591	768	RW	Word	-	0...100	%
V4-H74	Selection of 1st sensor for filtered virtual probe	V4	35727	0	38595	49152	RW	Word	-	0...65635	num
V4-H75	Percentage in thousandths of the incoming signal for filtered virtual probe	V4	35728	0	38596	3	RW	Word	-	0...65635	num
V4-H76	Filtered virtual probe offset	V4	35730	0	38596	12	RW	Word	-	0...65635	num
V4-EtY	Selection of electronic expansion valve driver	V4	35713	0	38591	3072	RW	Word	-	0...1	flag
V4-UL	Visibility of parameter transfer function (Device -> UNICARD/MFK)	V4	-	-	38594	3	RW	Word	-	0...3	num
V4-dL	Visibility of parameter transfer function (UNICARD/MFK -> Device)	V4	-	-	38594	12	RW	Word	-	0...3	num
V4-Fr	Visibility of UNICARD/MFK formatting function	V4	-	-	38594	48	RW	Word	-	0...3	num
V4-OHP	Selection of oil temperature probe	V4	35720	0	38594	12288	RW	Word	-	0...8	num
V4-OSP	Oil heater setpoint	V4	35721	0	38594	49152	RW	Word	Y	V4-OLS...V4-OHS	°C/°F

Label	Description	Folder	Val. Par. Address	Val. Filter	Vis. Par. Address	Vis. Filter	R/W	Data Size	CPL	Range	MU
V4-OHd	Oil heater differential	V4	35722	0	38595	3	RW	Word	-	0.1...25.0	°C/°F
V4-OHS	Maximum oil heater setpoint value that can be set	V4	35724	0	38595	48	RW	Word	Y	V4-OLS...302	°C/°F
V4-OLS	Minimum oil heater setpoint value that can be set	V4	35725	0	38595	192	RW	Word	Y	-58.0...V4-OHS	°C/°F
Application 5 parameters											
V5-rE	Regulation type	V5	35964	0	38656	3	RW	Word	-	0...6	num
V5-rP1	Thermostat regulation probe 1	V5	35965	0	38656	12	RW	Word	-	0...8	num
V5-rP2	Thermostat regulation probe 2	V5	35966	0	38656	48	RW	Word	-	0...9	num
V5-SP1	Regulation setpoint 1	V5	35967	0	38656	192	RW	Word	Y	V5-LS1...V5-HS1	°C/°F
V5-dF1	Setpoint differential 1	V5	35968	0	38656	768	RW	Word	Y	-58.0...302	°C/°F
V5-SP2	Regulation setpoint 2	V5	35969	0	38656	3072	RW	Word	Y	V5-LS2...V5-HS2	°C/°F
V5-dF2	Setpoint differential 2	V5	35970	0	38656	12288	RW	Word	Y	-58.0...302	°C/°F
V5-Stt	Differential management mode	V5	35973	0	38656	49152	RW	Word	-	0...1	flag
V5-HS1	Maximum value that can be set for Setpoint 1	V5	35976	0	38657	3	RW	Word	Y	V5-LS1...V5-HdL	°C/°F
V5-LS1	Minimum value that can be set for Setpoint 1	V5	35977	0	38657	12	RW	Word	Y	V5-LdL...V5-HS1	°C/°F
V5-HS2	Maximum value that can be set for Setpoint 2	V5	35978	0	38657	48	RW	Word	Y	V5-LS2...V5-HdL	°C/°F
V5-LS2	Minimum value that can be set for Setpoint 2	V5	35979	0	38657	192	RW	Word	Y	V5-LdL...V5-HS2	°C/°F
V5-HC1	Setpoint 1 operating mode (Heating/Cooling)	V5	35974	0	38657	768	RW	Word	-	0...1	flag
V5-HC2	Setpoint 2 operating mode (Heating/Cooling)	V5	35975	0	38657	3072	RW	Word	-	0...1	flag
V5-Cit	Minimum compressor output activation time	V5	35984	0	38657	49152	RW	Word	-	0...250	min
V5-CAt	Maximum compressor output activation time	V5	35985	0	38658	3	RW	Word	-	0...250	min
V5-Ont	Compressor output ON time if regulation probe is faulty	V5	35990	0	38658	12	RW	Word	-	0...250	min
V5-OFt	Compressor output OFF time if regulation probe is faulty	V5	35991	0	38658	48	RW	Word	-	0...250	min
V5-dOn	Compressor output activation delay from call	V5	35986	0	38658	192	RW	Word	-	0...250	s
V5-dOF	Compressor output activation delay from switch-off	V5	35987	0	38658	768	RW	Word	-	0...250	min
V5-dbi	Delay between two consecutive compressor output power-ons	V5	35988	0	38658	3072	RW	Word	-	0...250	min
V5-OdO	Output activation delay at startup	V5	35989	0	38658	12288	RW	Word	-	0...250	min

Label	Description	Folder	Val. Par. Address	Val. Filter	Vis. Par. Address	Vis. Filter	R/W	Data Size	CPL	Range	MU
V5-CFP	Condenser pre-ventilation time in Heat/Cool	V5	36073	0	38659	12	RW	Word	-	0...255	s
V5-CFd	Condenser fan cut-out during defrosting.	V5	36074	0	38659	48	RW	Word	-	0...1	flag
V5-OF1	Remote offset	V5	35995	0	38659	192	RW	Word	Y	-50.0...50.0	°C/°F
V5-Pot	Pump down time	V5	36101	0	38690	192	RW	Word	-	0...250	s
V5-SS1	Compressor softstart: advance hotgas valve opening	V5	36102	0	38690	768	RW	Word	-	0...250	s
V5-SS2	Compressor softstart: delay hotgas valve closing	V5	36103	0	38690	3072	RW	Word	-	0...250	s
V5-dP1	Select defrost probe 1	V5	35996	0	38659	768	RW	Word	-	0...8	num
V5-dP2	Defrost probe 2 selection	V5	35997	0	38659	3072	RW	Word	-	0...8	num
V5-dty	Type of defrost	V5	36000	0	38659	12288	RW	Word	-	0...4	num
V5-dFt	Dual evaporator defrost activation mode	V5	35998	0	38659	49152	RW	Word	-	0...2	num
V5-dit	Interval between defrosts	V5	36001	0	38660	3	RW	Word	-	0...250	hours
V5-dt1	Unit of measure for defrost intervals	V5	36004	0	38660	12	RW	Word	-	0...2	num
V5-dt2	Unit of measure for defrost duration	V5	36005	0	38660	48	RW	Word	-	0...2	num
V5-dCt	Defrost interval count mode	V5	35999	0	38660	192	RW	Word	-	0...5	num
V5-dOH	Defrost cycle activation delay from the call	V5	36006	0	38660	768	RW	Word	-	0...250	min
V5-dE1	Evaporator 1 defrost maximum duration	V5	36002	0	38660	3072	RW	Word	-	1...250	min
V5-dE2	Evaporator 2 defrost maximum duration	V5	36003	0	38660	12288	RW	Word	-	1...250	min
V5-dS1	Evaporator 1 defrost end temperature	V5	36008	0	38660	49152	RW	Word	Y	-58.0...302	°C/°F
V5-dS2	Evaporator 2 defrost end temperature	V5	36009	0	38661	3	RW	Word	Y	-58.0...302	°C/°F
V5-dSS	Temperature threshold for starting defrost	V5	36007	0	38661	12	RW	Word	Y	-58.0...302	°C/°F
V5-dPO	Defrost activation request at power-on	V5	36010	0	38661	48	RW	Word	-	0...1	flag
V5-tcd	Compressor output activation/deactivation time before a defrost	V5	36011	0	38661	192	RW	Word	Y	-60...60	min
V5-ndE	minimum defrost duration time	V5	36012	0	38661	768	RW	Word	-	0...250	min
V5-PdC	Hot gas extraction time at the end of the defrost	V5	36013	0	38661	3072	RW	Word	-	0...250	min
V5-tPd	Pump down time before defrost start	V5	36015	0	38661	12288	RW	Word	-	0...255	min
V5-dPH	Regular defrost start hour	V5	35954	0	38661	49152	RW	Word	-	0...24	hours
V5-dPn	Regular defrost start minutes	V5	35955	0	38662	3	RW	Word	-	0...59	min
V5-dPd	Regular defrost interval duration	V5	35956	0	38662	12	RW	Word	-	1...7	day
V5-Fd1	1st weekend/holiday day	V5	35903	0	38662	48	RW	Word	-	0...7	num

Label	Description	Folder	Val. Par. Address	Val. Filter	Vis. Par. Address	Vis. Filter	R/W	Data Size	CPL	Range	MU
V5-Fd2	2nd weekend/holiday day	V5	35904	0	38662	192	RW	Word	-	0...7	num
V5-Edt	Timeout and defrost end temperature specific to each event	V5	35905	0	38662	768	RW	Word	-	0...1	flag
V5-Fdn	Weekday defrost number	V5	35853	0	38696	3	RW	Word	-	0...250	num
V5-FFn	Weekend/holiday defrost number	V5	35854	0	38696	12	RW	Word	-	0...250	num
V5-PrH	Basin heater pre-activation time	V5	36110	0	38691	3072	RW	Word	-	0...255	min
V5-d1H	Weekday defrost no. 1 start hour	V5	35906	0	38662	3072	RW	Word	-	0...24	hours
V5-d1n	Weekday defrost no. 1 start minute	V5	35907	0	38662	12288	RW	Word	-	0...59	min
V5-d1t	1st weekday defrost duration	V5	35908	0	38662	49152	RW	Word	-	0...250	min
V5-d1S	1st weekday defrost end temperature	V5	35909	0	38663	3	RW	Word	Y	-58.0...302	°C/°F
V5-d2H	Weekday defrost no. 2 start hour	V5	35910	0	38663	12	RW	Word	-	V5-d1H...24	hours
V5-d2n	Weekday defrost no. 2 start minutes	V5	35911	0	38663	48	RW	Word	-	0...59	min
V5-d2t	2nd weekday defrost duration	V5	35912	0	38663	192	RW	Word	-	0...250	min
V5-d2S	2nd weekday defrost end temperature	V5	35913	0	38663	768	RW	Word	Y	-58.0...302	°C/°F
V5-d3H	Weekday defrost no. 3 start hour	V5	35914	0	38663	3072	RW	Word	-	V5-d2H...24	hours
V5-d3n	Weekday defrost no. 3 start minutes	V5	35915	0	38663	12288	RW	Word	-	0...59	min
V5-d3t	3rd weekday defrost duration	V5	35916	0	38663	49152	RW	Word	-	0...250	min
V5-d3S	3rd weekday defrost end temperature	V5	35917	0	38664	3	RW	Word	Y	-58.0...302	°C/°F
V5-d4H	Weekday defrost no. 4 start hour	V5	35918	0	38664	12	RW	Word	-	V5-d3H...24	hours
V5-d4n	Weekday defrost no. 4 start minutes	V5	35919	0	38664	48	RW	Word	-	0...59	min
V5-d4t	4th weekday defrost duration	V5	35920	0	38664	192	RW	Word	-	0...250	min
V5-d4S	4th weekday defrost end temperature	V5	35921	0	38664	768	RW	Word	Y	-58.0...302	°C/°F
V5-d5H	Weekday defrost no. 5 start hour	V5	35922	0	38664	3072	RW	Word	-	V5-d4H...24	hours
V5-d5n	Weekday defrost no. 5 start minutes	V5	35923	0	38664	12288	RW	Word	-	0...59	min
V5-d5t	5th weekday defrost duration	V5	35924	0	38664	49152	RW	Word	-	0...250	min
V5-d5S	5th weekday defrost end temperature	V5	35925	0	38665	3	RW	Word	Y	-58.0...302	°C/°F
V5-d6H	Weekday defrost no. 6 start hour	V5	35926	0	38665	12	RW	Word	-	V5-d5H...24	hours
V5-d6n	Weekday defrost no. 6 start minutes	V5	35927	0	38665	48	RW	Word	-	0...59	min
V5-d6t	6th weekday defrost duration	V5	35928	0	38665	192	RW	Word	-	0...250	min
V5-d6S	6th weekday defrost end temperature	V5	35929	0	38665	768	RW	Word	Y	-58.0...302	°C/°F

Label	Description	Folder	Val. Par. Address	Val. Filter	Vis. Par. Address	Vis. Filter	R/W	Data Size	CPL	Range	MU
V5-F1H	Weekend/holiday defrost no. 1 start hour	V5	35930	0	38665	3072	RW	Word	-	0...24	hours
V5-F1n	Weekend/holiday defrost no. 1 start minute	V5	35931	0	38665	12288	RW	Word	-	0...59	min
V5-F1t	1st weekend/holiday defrost duration	V5	35932	0	38665	49152	RW	Word	-	0...250	min
V5-F1S	1st weekend/holiday defrost end temperature	V5	35933	0	38666	3	RW	Word	Y	-58.0...302	°C/°F
V5-F2H	Weekend/holiday defrost no. 2 start hour	V5	35934	0	38666	12	RW	Word	-	V5-F1H...24	hours
V5-F2n	Weekend/holiday defrost no. 2 start minutes	V5	35935	0	38666	48	RW	Word	-	0...59	min
V5-F2t	2nd weekend/holiday defrost duration	V5	35936	0	38666	192	RW	Word	-	0...250	min
V5-F2S	2nd weekend/holiday defrost end temperature	V5	35937	0	38666	768	RW	Word	Y	-58.0...302	°C/°F
V5-F3H	Weekend/holiday defrost no. 3 start hour	V5	35938	0	38666	3072	RW	Word	-	V5-F2H...24	hours
V5-F3n	Weekend/holiday defrost no. 3 start minutes	V5	35939	0	38666	12288	RW	Word	-	0...59	min
V5-F3t	3rd weekend/holiday defrost duration	V5	35940	0	38666	49152	RW	Word	-	0...250	min
V5-F3S	3rd weekend/holiday defrost end temperature	V5	35941	0	38667	3	RW	Word	Y	-58.0...302	°C/°F
V5-F4H	Weekend/holiday defrost no. 4 start hour	V5	35942	0	38667	12	RW	Word	-	V5-F3H...24	hours
V5-F4n	Weekend/holiday defrost no. 4 start minutes	V5	35943	0	38667	48	RW	Word	-	0...59	min
V5-F4t	4th weekend/holiday defrost duration	V5	35944	0	38667	192	RW	Word	-	0...250	min
V5-F4S	4th weekend/holiday defrost end temperature	V5	35945	0	38667	768	RW	Word	Y	-58.0...302	°C/°F
V5-F5H	Weekend/holiday defrost no. 5 start hour	V5	35946	0	38667	3072	RW	Word	-	V5-F4H...24	hours
V5-F5n	Weekend/holiday defrost no. 5 start minutes	V5	35947	0	38667	12288	RW	Word	-	0...59	min
V5-F5t	5th weekend/holiday defrost duration	V5	35948	0	38667	49152	RW	Word	-	0...250	min
V5-F5S	5th weekend/holiday defrost end temperature	V5	35949	0	38668	3	RW	Word	Y	-58.0...302	°C/°F
V5-F6H	Weekend/holiday defrost no. 6 start hour	V5	35950	0	38668	12	RW	Word	-	V5-F5H...24	hours
V5-F6n	Weekend/holiday defrost no. 6 start minutes	V5	35951	0	38668	48	RW	Word	-	0...59	min
V5-F6t	6th weekend/holiday defrost duration	V5	35952	0	38668	192	RW	Word	-	0...250	min
V5-F6S	6th weekend/holiday defrost end temperature	V5	35953	0	38668	768	RW	Word	Y	-58.0...302	°C/°F

Label	Description	Folder	Val. Par. Address	Val. Filter	Vis. Par. Address	Vis. Filter	R/W	Data Size	CPL	Range	MU
V5-FP1	Selection of evaporator fan probe in normal mode	V5	36016	0	38668	3072	RW	Word	-	0...7	num
V5-FP2	Selection of evaporator fan probe in defrost	V5	36017	0	38668	12288	RW	Word	-	0...7	num
V5-FPt	FSt parameter mode (absolute or relative)	V5	36018	0	38668	49152	RW	Word	-	0...1	flag
V5-FSt	Evaporator fan disabling temperature	V5	36019	0	38669	3	RW	Word	Y	-58.0...302	°C/°F
V5-FAd	Evaporator fan trigger differential	V5	36020	0	38669	12	RW	Word	-	0.1...25.0	°C/°F
V5-Fdt	Evaporator fan activation delay time after a defrost cycle	V5	36021	0	38669	48	RW	Word	-	0...250	min
V5-dt	Dripping time	V5	36026	0	38669	192	RW	Word	-	0...250	min
V5-dFd	Evaporator fan cut-out during defrost	V5	36024	0	38669	768	RW	Word	-	0...1	flag
V5-FCO	Evaporator fan status with compressor output Off	V5	36023	0	38669	3072	RW	Word	-	0...4	num
V5-Fod	Evaporator fan status with door open	V5	36025	0	38669	12288	RW	Word	-	0...1	flag
V5-FdC	Evaporator fan shutoff delay after compressor deactivation	V5	36022	0	38669	49152	RW	Word	-	0...250	min
V5-FOn	Evaporator fan On time in cyclical regulator mode	V5	36027	0	38670	3	RW	Word	-	0...250	min
V5-FOF	Evaporator fan Off time in cyclical regulator mode	V5	36028	0	38670	12	RW	Word	-	0...250	min
V5-Fnn	Evaporator fan ON time in night mode (duty cycle)	V5	36029	0	38670	48	RW	Word	-	0...250	min
V5-FnF	Evaporator fan OFF time in night mode (duty cycle)	V5	36030	0	38670	192	RW	Word	-	0...250	min
V5-FE1	Variable speed fan probe selection	V5	36129	0	38694	48	RW	Word	-	0...12	num
V5-FEt	Setpoint mode	V5	36130	0	38694	192	RW	Word	-	0...1	flag
V5-FES	Setpoint	V5	36131	0	38694	768	RW	Word	Y	-58...302	°C/°F
V5-FEd	Band	V5	36132	0	38694	3072	RW	Word	-	0.1...50.0	°C/°F
V5-FEu	Cut-off band	V5	36133	0	38694	12288	RW	Word	-	0.0...25.0	°C/°F
V5-FEC	Cut-off differential	V5	36134	0	38694	49152	RW	Word	-	0.1...25.0	°C/°F
V5-FEr	Fan shutoff delay after compressor deactivation	V5	36135	0	38695	3	RW	Word	-	0...250	min
V5-FE2	Minimum day percentage	V5	36136	0	38695	12	RW	Word	-	0...100	%
V5-FE3	Maximum day percentage with compressor on	V5	36137	0	38695	48	RW	Word	-	0...100	%
V5-FE4	Maximum day percentage with compressor off	V5	36138	0	38695	192	RW	Word	-	0...100	%
V5-FE5	Minimum night percentage	V5	36139	0	38695	768	RW	Word	-	0...100	%

Label	Description	Folder	Val. Par. Address	Val. Filter	Vis. Par. Address	Vis. Filter	R/W	Data Size	CPL	Range	MU
V5-FE6	Maximum night percentage with compressor on	V5	36140	0	38695	3072	RW	Word	-	0...100	%
V5-FE7	Maximum night percentage with compressor off	V5	36141	0	38695	12288	RW	Word	-	0...100	%
V5-FE8	Percentage during defrost	V5	36142	0	38695	49152	RW	Word	-	0...100	%
V5-FE9	Percentage in the event of probe error	V5	36143	0	38707	12	RW	Word	-	0...100	%
V5-FEA	Maximum pick-up speed	V5	36144	0	38707	48	RW	Word	-	0...100	%
V5-FEb	Fan pick-up time	V5	36145	0	38707	192	RW	Word	-	0...250	s
V5-FEP	Fan forcing period at pick-up speed	V5	36146	0	38707	768	RW	Word	-	0...250	min
V5-rA1	Temperature alarm probe 1 selection	V5	36044	0	38670	768	RW	Word	-	0...7	num
V5-rA2	Temperature alarm probe 2 selection	V5	36045	0	38670	3072	RW	Word	-	0...7	num
V5-Att	Alarm mode (absolute or relative)	V5	36046	0	38670	12288	RW	Word	-	0...1	flag
V5-AFd	Alarm activation differential	V5	36047	0	38670	49152	RW	Word	-	0.1...25.0	°C/°F
V5-HA1	Maximum alarm 1 threshold	V5	36048	0	38671	3	RW	Word	Y	V5-LA1...302	°C/°F
V5-LA1	Minimum alarm 1 threshold	V5	36049	0	38671	12	RW	Word	Y	-58.0...V5-HA1	°C/°F
V5-HA2	Maximum alarm 2 threshold	V5	36050	0	38671	48	RW	Word	Y	V5-LA2...302	°C/°F
V5-LA2	Minimum alarm 2 threshold	V5	36051	0	38671	192	RW	Word	Y	-58.0...V5-HA2	°C/°F
V5-PAO	Temperature alarm exclusion time from power-on	V5	36052	0	38671	768	RW	Word	-	0...10	hours
V5-dAO	Exclusion time for temperature alarms after a defrost cycle	V5	36054	0	38671	3072	RW	Word	-	0...250	min
V5-OAO	High and low temperature alarms exclusion time after closing the door	V5	36053	0	38671	12288	RW	Word	-	0...10	hours
V5-tdO	Door open alarm exclusion time	V5	36098	0	38671	49152	RW	Word	-	0...250	min
V5-tA1	Probe 1 High/Minimum Alarm Delay	V5	36055	0	38672	3	RW	Word	-	0...250	min
V5-tA2	Probe 2 High/Minimum Alarm Delay	V5	36056	0	38672	12	RW	Word	-	0...250	min
V5-dAt	Defrost ended due to timeout alarm signaling	V5	36014	0	38672	48	RW	Word	-	0...1	flag
V5-EAL	Regulators inhibited by external alarm	V5	36058	0	38672	192	RW	Word	-	0...2	num
V5-rA3	Sets the input used by the two thresholds alarm regulator	V5	36117	0	38692	12288	RW	Word	-	0...8	num
V5-ALL	Low alarm threshold (warning)	V5	36118	0	38692	49152	RW	Word	-	0.0...V5-ALH	num
V5-ALH	High alarm threshold (alarm)	V5	36119	0	38693	3	RW	Word	-	V5-ALL...100	num
V5-dAL	2 thresholds alarm regulator differential	V5	36120	0	38693	12	RW	Word	-	0.1...100	°C/°F

Label	Description	Folder	Val. Par. Address	Val. Filter	Vis. Par. Address	Vis. Filter	R/W	Data Size	CPL	Range	MU
V5-AL1	Minimum persistence time above the ALL threshold due to alarm activation	V5	36121	0	38693	48	RW	Word	-	0...250	min
V5-AL2	Minimum persistence time above the ALH threshold due to alarm activation	V5	36128	0	38694	12	RW	Word	-	0...250	min
V5-tP	Enables alarm acknowledgment with any key	V5	36099	0	38672	768	RW	Word	-	0...1	flag
V5-Art	Regular watchdog alarm activation period	V5	36043	0	38672	3072	RW	Word	-	0...250	min*10
V5-ttA	Manage temperature alarms with door open.	V5	36147	0	38698	3072	RW	Word	-	0...1	flag
V5-dSd	Enable light relay from door switch	V5	36040	0	38672	12288	RW	Word	-	0...1	flag
V5-dLt	Light relay off delay from door closure	V5	36041	0	38672	49152	RW	Word	-	0...250	min
V5-OFL	Enable cold room lights off via key during the delay set in parameter dLt	V5	36042	0	38673	3	RW	Word	-	0...1	flag
V5-dOd	Enable utility shutoff upon door switch activation	V5	36057	0	38673	12	RW	Word	-	0...3	num
V5-dOA	Behavior forced by digital input	V5	36059	0	38673	48	RW	Word	-	0...5	num
V5-PEA	Enable forced behavior from door switch and/or external alarm.	V5	36060	0	38673	192	RW	Word	-	0...3	num
V5-dCO	Compressor activation delay from acknowledgment	V5	36061	0	38673	768	RW	Word	-	0...250	min
V5-dFO	Fan enabling delay from acknowledgment	V5	36062	0	38673	3072	RW	Word	-	0...250	min
V5-ASb	Instrument off active light/auxiliary digital input or key	V5	36088	0	38673	12288	RW	Word	-	0...1	flag
V5-L00	Shared probe	V5	35840	0	38673	49152	RW	Word	-	0...7	num
V5-L01	Distributed viewing (refers to secondary)	V5	35841	0	38674	3	RW	Word	-	0...2	num
V5-L02	Setpoint synchronization	V5	35842	0	38674	12	RW	Word	-	0...1	flag
V5-L03	Defrost synchronization	V5	35843	0	38674	48	RW	Word	-	0...2	num
V5-L04	Inhibit resources at the end of defrost	V5	35844	0	38674	192	RW	Word	-	0...1	flag
V5-L05	Stand-by synchronization	V5	35845	0	38674	768	RW	Word	-	0...1	flag
V5-L06	Lights synchronization	V5	35846	0	38674	3072	RW	Word	-	0...1	flag
V5-L07	Reduced set synchronization	V5	35847	0	38674	12288	RW	Word	-	0...1	flag
V5-L08	AUX synchronization	V5	35848	0	38674	49152	RW	Word	-	0...1	flag
V5-L09	Shared saturation probe	V5	35849	0	38675	3	RW	Word	-	0...1	flag
V5-L10	Resource unlocking timeout during synchronized defrosts	V5	36100	0	38675	12	RW	Word	-	0...250	min

Label	Description	Folder	Val. Par. Address	Val. Filter	Vis. Par. Address	Vis. Filter	R/W	Data Size	CPL	Range	MU
V5-L11	Number of devices connected in Link2	V5	35850	0	38692	48	RW	Word	-	0...8	num
V5-L12	Alarm relay sharing in Link2	V5	35851	0	38692	192	RW	Word	-	0...2	num
V5-L13	Link2 serial frame configuration	V5	36111	0	38691	12288	RW	Word	-	0...1	flag
V5-L14	Force cool mode	V5	36127	0	38694	3	RW	Word	-	0...1	flag
V5-L15	Shared buzzer and alarm silenced via Link2	V5	36107	0	38696	48	RW	Word	-	0...2	num
V5-dcS	Deep cooling setpoint	V5	36034	0	38675	768	RW	Word	Y	-58.0...302	°C/°F
V5-tdc	Deep cooling duration	V5	36035	0	38675	3072	RW	Word	-	0...250	min
V5-dcc	Defrost delay after deep cooling	V5	36036	0	38675	12288	RW	Word	-	0...250	min
V5-ESt	Type of action for the Energy Saving function	V5	35963	0	38675	49152	RW	Word	-	0...8	num
V5-ESF	Night mode activation (Energy Saving)	V5	36031	0	38676	3	RW	Word	-	0...1	flag
V5-Cdt	Door closing time	V5	36032	0	38676	12	RW	Word	-	0...255	min*10
V5-ESo	Low consumption mode disabling timeout (door switch)	V5	36033	0	38676	48	RW	Word	-	0...10	num
V5-OS1	Offset on setpoint 1	V5	35980	0	38676	192	RW	Word	Y	-50.0...50.0	°C/°F
V5-OS2	Offset on setpoint 2	V5	35981	0	38676	768	RW	Word	Y	-50.0...50.0	°C/°F
V5-Od1	Refrigerated cabinets energy saving offset 1	V5	35982	0	38676	3072	RW	Word	Y	-50.0...50.0	°C/°F
V5-Od2	Refrigerated cabinets energy saving offset 2	V5	35983	0	38676	12288	RW	Word	Y	-50.0...50.0	°C/°F
V5-dn1	Differential during energy saving mode 1	V5	35971	0	38676	49152	RW	Word	Y	-58.0...302	°C/°F
V5-dn2	Differential during energy saving mode 2	V5	35972	0	38677	3	RW	Word	Y	-58.0...302	°C/°F
V5-EdH	Weekday energy saving start hour	V5	35957	0	38677	12	RW	Word	-	0...24	hours
V5-Edn	Weekday energy saving start minutes	V5	35958	0	38677	48	RW	Word	-	0...59	min
V5-Edd	Weekday energy saving duration	V5	35959	0	38677	192	RW	Word	-	1...72	hours
V5-EFH	Weekend/holiday energy saving start hour	V5	35960	0	38677	768	RW	Word	-	0...24	hours
V5-EFn	Weekend/holiday energy saving start minutes	V5	35961	0	38677	3072	RW	Word	-	0...59	min
V5-EFd	Weekend/holiday energy saving duration	V5	35962	0	38677	12288	RW	Word	-	1...72	hours
V5-FH	Frame heater probe selection	V5	36063	0	38677	49152	RW	Word	-	0...9	num
V5-FHt	Frame heater period	V5	36065	0	38678	3	RW	Word	-	1...250	s
V5-FH0	Frame heater set	V5	36066	0	38678	12	RW	Word	Y	-58.0...302	°C/°F
V5-FH1	Frame heater offset	V5	36067	0	38678	48	RW	Word	-	0.0...25.0	°C/°F
V5-FH2	Frame heater band	V5	36068	0	38678	192	RW	Word	Y	-58.0...302	°C/°F

Label	Description	Folder	Val. Par. Address	Val. Filter	Vis. Par. Address	Vis. Filter	R/W	Data Size	CPL	Range	MU
V5-FH3	Frame heater minimum percentage/duty-cycle	V5	36069	0	38678	768	RW	Word	-	0...100	%
V5-FH4	Frame heater maximum percentage/day duty-cycle	V5	36070	0	38678	3072	RW	Word	-	0...100	%
V5-FH5	Frame heater maximum percentage/night duty-cycle	V5	36071	0	38678	12288	RW	Word	-	0...100	%
V5-FH6	Frame heater percentage/duty-cycle in defrost	V5	36072	0	38678	49152	RW	Word	-	0...100	%
V5-LOC	Disable terminal	V5	36075	0	38679	3	RW	Word	-	0...1	flag
V5-PS1	Password 1 value	V5	36076	0	38679	12	RW	Word	-	0...250	num
V5-PS2	Password 2 value	V5	36077	0	38679	48	RW	Word	-	0...250	num
V5-ndt	Display with decimal point	V5	36078	0	38679	192	RW	Word	-	0...1	flag
V5-CA1	Analog input 1 calibration	V5	35884	0	38679	768	RW	Word	Y	-30.0...30.0	°C/°F
V5-CA2	Analog input 2 calibration	V5	35885	0	38679	3072	RW	Word	Y	-30.0...30.0	°C/°F
V5-CA3	Analog input 3 calibration	V5	35886	0	38679	12288	RW	Word	Y	-30.0...30.0	°C/°F
V5-CA4	Analog input 4 calibration	V5	35887	0	38679	49152	RW	Word	Y	-30.0...30.0	°C/°F
V5-CA5	Analog input 5 calibration	V5	35888	0	38680	3	RW	Word	Y	-30.0...30.0	°C/°F
V5-CA6	Analog input 6 calibration	V5	35889	0	38680	12	RW	Word	Y	-30.0...30.0	bar/psi
V5-CA7	Analog input 7 calibration	V5	35890	0	38680	48	RW	Word	Y	-30.0...30.0	bar/psi
V5-LdL	Minimum display value	V5	36079	0	38680	192	RW	Word	Y	-58.0...V5-HdL	°C/°F
V5-HdL	Maximum display value	V5	36080	0	38680	768	RW	Word	Y	V5-LdL...302	°C/°F
V5-ddL	Display lock mode during a defrost	V5	36081	0	38680	3072	RW	Word	-	0...2	num
V5-Ldd	Display lock timeout from end of defrost	V5	36082	0	38680	12288	RW	Word	-	0...250	min
V5-dro	Select °C / °F	V5	36083	0	38680	49152	RW	Word	-	0...1	flag
V5-SbP	Pressure unit of measure	V5	36084	0	38681	3	RW	Word	-	0...1	flag
V5-ddd	Select main display value	V5	36085	0	38681	12	RW	Word	-	0...8	num
V5-ddE	Resource displayed on ECHO	V5	36086	0	38681	48	RW	Word	-	0...11	num
V5-rPH	Receiver maximum valve opening %	V5	36037	0	38681	192	RW	Word	-	0...5	num
V5-H00	Select analog input type NTC/PTC	V5	35852	0	38681	768	RW	Word	-	0...2	num
V5-H02	Function activation time from terminal	V5	36087	0	38681	3072	RW	Word	-	0...250	s
V5-H08	Stand-by operating mode	V5	36089	0	38681	12288	RW	Word	-	0...2	num
V5-H11	Digital input 1 configurability and polarity	V5	35855	0	38681	49152	RW	Word	Y	-19...19	num

Label	Description	Folder	Val. Par. Address	Val. Filter	Vis. Par. Address	Vis. Filter	R/W	Data Size	CPL	Range	MU
V5-H12	Digital input 2 configurability and polarity	V5	35856	0	38682	3	RW	Word	Y	-19...19	num
V5-H13	Digital input 3 configurability and polarity	V5	35857	0	38682	12	RW	Word	Y	-19...19	num
V5-H14	Digital input 4 configurability and polarity	V5	35858	0	38682	48	RW	Word	Y	-19...19	num
V5-H15	Digital input 5 configurability and polarity	V5	35859	0	38682	192	RW	Word	Y	-19...19	num
V5-H16	Digital input 6 configurability and polarity	V5	35860	0	38682	768	RW	Word	Y	-19...19	num
V5-H17	Digital input 7 configurability and polarity	V5	35861	0	38682	3072	RW	Word	Y	-19...19	num
V5-H18	Digital input 8 configurability and polarity	V5	35862	0	38682	12288	RW	Word	Y	-19...19	num
V5-i01	Digital input 9 configurability and polarity	V5	36122	0	38693	192	RW	Word	Y	-19...19	num
V5-i02	Digital input 10 configurability and polarity	V5	36123	0	38693	768	RW	Word	Y	-19...19	num
V5-dti	Digital inputs 1 and 2 delay unit of measure	V5	35871	0	38682	49152	RW	Word	-	0...1	flag
V5-d11	D.I. 1 activation indication delay time	V5	35863	0	38683	3	RW	Word	-	0...255	min
V5-d12	D.I. 2 activation indication delay time	V5	35864	0	38683	12	RW	Word	-	0...255	min
V5-d13	D.I. 3 activation indication delay time	V5	35865	0	38683	48	RW	Word	-	0...255	min
V5-d14	D.I. 4 activation indication delay time	V5	35866	0	38683	192	RW	Word	-	0...255	min
V5-d15	D.I. 5 activation indication delay time	V5	35867	0	38683	768	RW	Word	-	0...255	min
V5-d16	D.I. 6 activation indication delay time	V5	35868	0	38683	3072	RW	Word	-	0...255	min
V5-d17	D.I. 7 activation indication delay time	V5	35869	0	38683	12288	RW	Word	-	0...255	min
V5-d18	D.I. 8 activation indication delay time	V5	35870	0	38683	49152	RW	Word	-	0...255	min
V5-01i	D.I. 9 activation indication delay time	V5	36124	0	38693	3072	RW	Word	-	0...255	min
V5-02i	D.I. 10 activation indication delay time	V5	36125	0	38693	12288	RW	Word	-	0...255	min
V5-H21	Configurability of digital output 1	V5	35892	0	38684	3	RW	Word	-	0...19	num
V5-H22	Configurability of digital output 2	V5	35893	0	38684	12	RW	Word	-	0...19	num
V5-H23	Configurability of digital output 3	V5	35894	0	38684	48	RW	Word	-	0...19	num
V5-H24	Configurability of digital output 4	V5	35895	0	38684	192	RW	Word	-	0...19	num
V5-H25	Configurability of digital output 5	V5	35896	0	38684	768	RW	Word	-	0...19	num
V5-H27	Configurability of digital output 7	V5	35898	0	38684	12288	RW	Word	-	0...19	num

Label	Description	Folder	Val. Par. Address	Val. Filter	Vis. Par. Address	Vis. Filter	R/W	Data Size	CPL	Range	MU
V5-H29	Enable buzzer	V5	35899	0	38684	49152	RW	Word	-	0...1	num
V5-d01	Configurability of digital output 8	V5	36115	0	38692	768	RW	Word	-	0...19	num
V5-d02	Configurability of digital output 9	V5	36116	0	38692	3072	RW	Word	-	0...19	num
V5-H31	Configurability of the UP key	V5	36090	0	38685	3	RW	Word	-	0...9	num
V5-H32	Configurability of the DOWN key	V5	36091	0	38685	12	RW	Word	-	0...9	num
V5-H33	Configurability of the ESC key	V5	36092	0	38685	48	RW	Word	-	0...9	num
V5-H34	Configurability of the Free 1 key	V5	36093	0	38685	192	RW	Word	-	0...9	num
V5-H35	Configurability of the Free 2 key	V5	36094	0	38685	768	RW	Word	-	0...9	num
V5-H36	Configurability of the Free 3 key	V5	36095	0	38685	3072	RW	Word	-	0...9	num
V5-H37	Configurability of the Free 4 key	V5	36096	0	38685	12288	RW	Word	-	0...9	num
V5-H41	Configurability of analog input 1	V5	35872	0	38685	49152	RW	Word	-	0...2	num
V5-H42	Configurability of analog input 2	V5	35873	0	38686	3	RW	Word	-	0...2	num
V5-H43	Configurability of analog input 3	V5	35874	0	38686	12	RW	Word	-	0...2	num
V5-H44	Configurability of analog input 4	V5	35875	0	38686	48	RW	Word	-	0...2	num
V5-H45	Configurability of analog input 5	V5	35876	0	38686	192	RW	Word	-	0...2	num
V5-H46	Configurability of analog input 6	V5	35877	0	38686	768	RW	Word	-	0...2	num
V5-H47	Configurability of analog input 7	V5	35878	0	38686	3072	RW	Word	-	0...2	num
V5-H48	Configurability of analog input 8	V5	36126	0	38693	49152	RW	Word	-	0...2	num
V5-H50	Configurability of analog output 1	V5	35900	0	38686	12288	RW	Word	-	0...1	num
V5-H51	Function associated with analog output	V5	35901	0	38686	49152	RW	Word	-	0...3	num
V5-H68	RTC present	V5	35902	0	38687	3	RW	Word	-	0...1	num
V5-H70	Selection of 1st sensor for virtual probe	V5	35880	0	38687	12	RW	Word	-	0...5	num
V5-H71	Selection of 2nd sensor for virtual probe	V5	35881	0	38687	48	RW	Word	-	0...5	num
V5-H72	Day virtual probe calculation %	V5	35882	0	38687	192	RW	Word	-	0...100	%
V5-H73	Night virtual probe calculation %	V5	35883	0	38687	768	RW	Word	-	0...100	%
V5-H74	Selection of 1st sensor for filtered virtual probe	V5	36112	0	38691	49152	RW	Word	-	0...65635	num
V5-H75	Percentage in thousandths of the incoming signal for filtered virtual probe	V5	36113	0	38692	3	RW	Word	-	0...65635	num
V5-H76	Filtered virtual probe offset	V5	36114	0	38692	12	RW	Word	-	0...65635	num
V5-EtY	Selection of electronic expansion valve driver	V5	36097	0	38687	3072	RW	Word	-	0...1	flag

Label	Description	Folder	Val. Par. Address	Val. Filter	Vis. Par. Address	Vis. Filter	R/W	Data Size	CPL	Range	MU
V5-UL	Visibility of parameter transfer function (Device -> UNICARD/MFK)	V5	-	-	38690	3	RW	Word	-	0...3	num
V5-dL	Visibility of parameter transfer function (UNICARD/MFK -> Device)	V5	-	-	38690	12	RW	Word	-	0...3	num
V5-Fr	Visibility of UNICARD/MFK formatting function	V5	-	-	38690	48	RW	Word	-	0...3	num
V5-OHP	Selection of oil temperature probe	V5	36104	0	38690	12288	RW	Word	-	0...8	num
V5-OSP	Oil heater setpoint	V5	36105	0	38690	49152	RW	Word	Y	V5-OLS...V5-OHS	°C/°F
V5-OHd	Oil heater differential	V5	36106	0	38691	3	RW	Word	-	0.1...25.0	°C/°F
V5-OHS	Maximum oil heater setpoint value that can be set	V5	36108	0	38691	48	RW	Word	Y	V5-OLS...302	°C/°F
V5-OLS	Minimum oil heater setpoint value that can be set	V5	36109	0	38691	192	RW	Word	Y	-58.0...V5-OHS	°C/°F
Application 6 parameters											
V6-rE	Regulation type	V6	36348	0	38752	3	RW	Word	-	0...6	num
V6-rP1	Thermostat regulation probe 1	V6	36349	0	38752	12	RW	Word	-	0...8	num
V6-rP2	Thermostat regulation probe 2	V6	36350	0	38752	48	RW	Word	-	0...9	num
V6-SP1	Regulation setpoint 1	V6	36351	0	38752	192	RW	Word	Y	V6-LS1...V6-HS1	°C/°F
V6-dF1	Setpoint differential 1	V6	36352	0	38752	768	RW	Word	Y	-58.0...302	°C/°F
V6-SP2	Regulation setpoint 2	V6	36353	0	38752	3072	RW	Word	Y	V6-LS2...V6-HS2	°C/°F
V6-dF2	Setpoint differential 2	V6	36354	0	38752	12288	RW	Word	Y	-58.0...302	°C/°F
V6-Stt	Differential management mode	V6	36357	0	38752	49152	RW	Word	-	0...1	flag
V6-HS1	Maximum value that can be set for Setpoint 1	V6	36360	0	38753	3	RW	Word	Y	V6-LS1...V6-HdL	°C/°F
V6-LS1	Minimum value that can be set for Setpoint 1	V6	36361	0	38753	12	RW	Word	Y	V6-LdL...V6-HS1	°C/°F
V6-HS2	Maximum value that can be set for Setpoint 2	V6	36362	0	38753	48	RW	Word	Y	V6-LS2...V6-HdL	°C/°F
V6-LS2	Minimum value that can be set for Setpoint 2	V6	36363	0	38753	192	RW	Word	Y	V6-LdL...V6-HS2	°C/°F
V6-HC1	Setpoint 1 operating mode (Heating/Cooling)	V6	36358	0	38753	768	RW	Word	-	0...1	flag
V6-HC2	Setpoint 2 operating mode (Heating/Cooling)	V6	36359	0	38753	3072	RW	Word	-	0...1	flag
V6-Cit	Minimum compressor output activation time	V6	36368	0	38753	49152	RW	Word	-	0...250	min
V6-CAt	Maximum compressor output activation time	V6	36369	0	38754	3	RW	Word	-	0...250	min
V6-Ont	Compressor output ON time if regulation probe is faulty	V6	36374	0	38754	12	RW	Word	-	0...250	min

Label	Description	Folder	Val. Par. Address	Val. Filter	Vis. Par. Address	Vis. Filter	R/W	Data Size	CPL	Range	MU
V6-OFt	Compressor output OFF time if regulation probe is faulty	V6	36375	0	38754	48	RW	Word	-	0...250	min
V6-dOn	Compressor output activation delay from call	V6	36370	0	38754	192	RW	Word	-	0...250	s
V6-dOF	Compressor output activation delay from switch-off	V6	36371	0	38754	768	RW	Word	-	0...250	min
V6-dbi	Delay between two consecutive compressor output power-ons	V6	36372	0	38754	3072	RW	Word	-	0...250	min
V6-OdO	Output activation delay at startup	V6	36373	0	38754	12288	RW	Word	-	0...250	min
V6-CFP	Condenser pre-ventilation time in Heat/Cool	V6	36457	0	38755	12	RW	Word	-	0...255	s
V6-CFd	Condenser fan cut-out during defrosting.	V6	36458	0	38755	48	RW	Word	-	0...1	flag
V6-OF1	Remote offset	V6	36379	0	38755	192	RW	Word	Y	-50.0...50.0	°C/°F
V6-Pot	Pump down time	V6	36485	0	38786	192	RW	Word	-	0...250	s
V6-SS1	Compressor softstart: advance hotgas valve opening	V6	36486	0	38786	768	RW	Word	-	0...250	s
V6-SS2	Compressor softstart: delay hotgas valve closing	V6	36487	0	38786	3072	RW	Word	-	0...250	s
V6-dP1	Select defrost probe 1	V6	36380	0	38755	768	RW	Word	-	0...8	num
V6-dP2	Defrost probe 2 selection	V6	36381	0	38755	3072	RW	Word	-	0...8	num
V6-dty	Type of defrost	V6	36384	0	38755	12288	RW	Word	-	0...4	num
V6-dFt	Dual evaporator defrost activation mode	V6	36382	0	38755	49152	RW	Word	-	0...2	num
V6-dit	Interval between defrosts	V6	36385	0	38756	3	RW	Word	-	0...250	hours
V6-dt1	Unit of measure for defrost intervals	V6	36388	0	38756	12	RW	Word	-	0...2	num
V6-dt2	Unit of measure for defrost duration	V6	36389	0	38756	48	RW	Word	-	0...2	num
V6-dCt	Defrost interval count mode	V6	36383	0	38756	192	RW	Word	-	0...5	num
V6-dOH	Defrost cycle activation delay from the call	V6	36390	0	38756	768	RW	Word	-	0...250	min
V6-dE1	Evaporator 1 defrost maximum duration	V6	36386	0	38756	3072	RW	Word	-	1...250	min
V6-dE2	Evaporator 2 defrost maximum duration	V6	36387	0	38756	12288	RW	Word	-	1...250	min
V6-dS1	Evaporator 1 defrost end temperature	V6	36392	0	38756	49152	RW	Word	Y	-58.0...302	°C/°F
V6-dS2	Evaporator 2 defrost end temperature	V6	36393	0	38757	3	RW	Word	Y	-58.0...302	°C/°F
V6-dSS	Temperature threshold for starting defrost	V6	36391	0	38757	12	RW	Word	Y	-58.0...302	°C/°F
V6-dPO	Defrost activation request at power-on	V6	36394	0	38757	48	RW	Word	-	0...1	flag
V6-tcd	Compressor output activation/deactivation time before a defrost	V6	36395	0	38757	192	RW	Word	Y	-60...60	min

Label	Description	Folder	Val. Par. Address	Val. Filter	Vis. Par. Address	Vis. Filter	R/W	Data Size	CPL	Range	MU
V6-ndE	minimum defrost duration time	V6	36396	0	38757	768	RW	Word	-	0...250	min
V6-PdC	Hot gas extraction time at the end of the defrost	V6	36397	0	38757	3072	RW	Word	-	0...250	min
V6-tPd	Pump down time before defrost start	V6	36399	0	38757	12288	RW	Word	-	0...255	min
V6-dPH	Regular defrost start hour	V6	36338	0	38757	49152	RW	Word	-	0...24	hours
V6-dPn	Regular defrost start minutes	V6	36339	0	38758	3	RW	Word	-	0...59	min
V6-dPd	Regular defrost interval duration	V6	36340	0	38758	12	RW	Word	-	1...7	day
V6-Fd1	1st weekend/holiday day	V6	36287	0	38758	48	RW	Word	-	0...7	num
V6-Fd2	2nd weekend/holiday day	V6	36288	0	38758	192	RW	Word	-	0...7	num
V6-Edt	Timeout and defrost end temperature specific to each event	V6	36289	0	38758	768	RW	Word	-	0...1	flag
V6-Fdn	Weekday defrost number	V6	36237	0	38792	3	RW	Word	-	0...250	num
V6-FFn	Weekend/holiday defrost number	V6	36238	0	38792	12	RW	Word	-	0...250	num
V6-PrH	Basin heater pre-activation time	V6	36494	0	38787	3072	RW	Word	-	0...255	min
V6-d1H	Weekday defrost no. 1 start hour	V6	36290	0	38758	3072	RW	Word	-	0...24	hours
V6-d1n	Weekday defrost no. 1 start minute	V6	36291	0	38758	12288	RW	Word	-	0...59	min
V6-d1t	1st weekday defrost duration	V6	36292	0	38758	49152	RW	Word	-	0...250	min
V6-d1S	1st weekday defrost end temperature	V6	36293	0	38759	3	RW	Word	Y	-58.0...302	°C/°F
V6-d2H	Weekday defrost no. 2 start hour	V6	36294	0	38759	12	RW	Word	-	V6-d1H...24	hours
V6-d2n	Weekday defrost no. 2 start minutes	V6	36295	0	38759	48	RW	Word	-	0...59	min
V6-d2t	2nd weekday defrost duration	V6	36296	0	38759	192	RW	Word	-	0...250	min
V6-d2S	2nd weekday defrost end temperature	V6	36297	0	38759	768	RW	Word	Y	-58.0...302	°C/°F
V6-d3H	Weekday defrost no. 3 start hour	V6	36298	0	38759	3072	RW	Word	-	V6-d2H...24	hours
V6-d3n	Weekday defrost no. 3 start minutes	V6	36299	0	38759	12288	RW	Word	-	0...59	min
V6-d3t	3rd weekday defrost duration	V6	36300	0	38759	49152	RW	Word	-	0...250	min
V6-d3S	3rd weekday defrost end temperature	V6	36301	0	38760	3	RW	Word	Y	-58.0...302	°C/°F
V6-d4H	Weekday defrost no. 4 start hour	V6	36302	0	38760	12	RW	Word	-	V6-d3H...24	hours
V6-d4n	Weekday defrost no. 4 start minutes	V6	36303	0	38760	48	RW	Word	-	0...59	min
V6-d4t	4th weekday defrost duration	V6	36304	0	38760	192	RW	Word	-	0...250	min
V6-d4S	4th weekday defrost end temperature	V6	36305	0	38760	768	RW	Word	Y	-58.0...302	°C/°F
V6-d5H	Weekday defrost no. 5 start hour	V6	36306	0	38760	3072	RW	Word	-	V6-d4H...24	hours

Label	Description	Folder	Val. Par. Address	Val. Filter	Vis. Par. Address	Vis. Filter	R/W	Data Size	CPL	Range	MU
V6-d5n	Weekday defrost no. 5 start minutes	V6	36307	0	38760	12288	RW	Word	-	0...59	min
V6-d5t	5th weekday defrost duration	V6	36308	0	38760	49152	RW	Word	-	0...250	min
V6-d5S	5th weekday defrost end temperature	V6	36309	0	38761	3	RW	Word	Y	-58.0...302	°C/°F
V6-d6H	Weekday defrost no. 6 start hour	V6	36310	0	38761	12	RW	Word	-	V6-d5H...24	hours
V6-d6n	Weekday defrost no. 6 start minutes	V6	36311	0	38761	48	RW	Word	-	0...59	min
V6-d6t	6th weekday defrost duration	V6	36312	0	38761	192	RW	Word	-	0...250	min
V6-d6S	6th weekday defrost end temperature	V6	36313	0	38761	768	RW	Word	Y	-58.0...302	°C/°F
V6-F1H	Weekend/holiday defrost no. 1 start hour	V6	36314	0	38761	3072	RW	Word	-	0...24	hours
V6-F1n	Weekend/holiday defrost no. 1 start minute	V6	36315	0	38761	12288	RW	Word	-	0...59	min
V6-F1t	1st weekend/holiday defrost duration	V6	36316	0	38761	49152	RW	Word	-	0...250	min
V6-F1S	1st weekend/holiday defrost end temperature	V6	36317	0	38762	3	RW	Word	Y	-58.0...302	°C/°F
V6-F2H	Weekend/holiday defrost no. 2 start hour	V6	36318	0	38762	12	RW	Word	-	V6-F1H...24	hours
V6-F2n	Weekend/holiday defrost no. 2 start minutes	V6	36319	0	38762	48	RW	Word	-	0...59	min
V6-F2t	2nd weekend/holiday defrost duration	V6	36320	0	38762	192	RW	Word	-	0...250	min
V6-F2S	2nd weekend/holiday defrost end temperature	V6	36321	0	38762	768	RW	Word	Y	-58.0...302	°C/°F
V6-F3H	Weekend/holiday defrost no. 3 start hour	V6	36322	0	38762	3072	RW	Word	-	V6-F2H...24	hours
V6-F3n	Weekend/holiday defrost no. 3 start minutes	V6	36323	0	38762	12288	RW	Word	-	0...59	min
V6-F3t	3rd weekend/holiday defrost duration	V6	36324	0	38762	49152	RW	Word	-	0...250	min
V6-F3S	3rd weekend/holiday defrost end temperature	V6	36325	0	38763	3	RW	Word	Y	-58.0...302	°C/°F
V6-F4H	Weekend/holiday defrost no. 4 start hour	V6	36326	0	38763	12	RW	Word	-	V6-F3H...24	hours
V6-F4n	Weekend/holiday defrost no. 4 start minutes	V6	36327	0	38763	48	RW	Word	-	0...59	min
V6-F4t	4th weekend/holiday defrost duration	V6	36328	0	38763	192	RW	Word	-	0...250	min
V6-F4S	4th weekend/holiday defrost end temperature	V6	36329	0	38763	768	RW	Word	Y	-58.0...302	°C/°F
V6-F5H	Weekend/holiday defrost no. 5 start hour	V6	36330	0	38763	3072	RW	Word	-	V6-F4H...24	hours
V6-F5n	Weekend/holiday defrost no. 5 start minutes	V6	36331	0	38763	12288	RW	Word	-	0...59	min
V6-F5t	5th weekend/holiday defrost duration	V6	36332	0	38763	49152	RW	Word	-	0...250	min

Label	Description	Folder	Val. Par. Address	Val. Filter	Vis. Par. Address	Vis. Filter	R/W	Data Size	CPL	Range	MU
V6-F5S	5th weekend/holiday defrost end temperature	V6	36333	0	38764	3	RW	Word	Y	-58.0...302	°C/°F
V6-F6H	Weekend/holiday defrost no. 6 start hour	V6	36334	0	38764	12	RW	Word	-	V6-F5H...24	hours
V6-F6n	Weekend/holiday defrost no. 6 start minutes	V6	36335	0	38764	48	RW	Word	-	0...59	min
V6-F6t	6th weekend/holiday defrost duration	V6	36336	0	38764	192	RW	Word	-	0...250	min
V6-F6S	6th weekend/holiday defrost end temperature	V6	36337	0	38764	768	RW	Word	Y	-58.0...302	°C/°F
V6-FP1	Selection of evaporator fan probe in normal mode	V6	36400	0	38764	3072	RW	Word	-	0...7	num
V6-FP2	Selection of evaporator fan probe in defrost	V6	36401	0	38764	12288	RW	Word	-	0...7	num
V6-FPt	FSt parameter mode (absolute or relative)	V6	36402	0	38764	49152	RW	Word	-	0...1	flag
V6-FSt	Evaporator fan disabling temperature	V6	36403	0	38765	3	RW	Word	Y	-58.0...302	°C/°F
V6-FAd	Evaporator fan trigger differential	V6	36404	0	38765	12	RW	Word	-	0.1...25.0	°C/°F
V6-Fdt	Evaporator fan activation delay time after a defrost cycle	V6	36405	0	38765	48	RW	Word	-	0...250	min
V6-dt	Dripping time	V6	36410	0	38765	192	RW	Word	-	0...250	min
V6-dFd	Evaporator fan cut-out during defrost	V6	36408	0	38765	768	RW	Word	-	0...1	flag
V6-FCO	Evaporator fan status with compressor output Off	V6	36407	0	38765	3072	RW	Word	-	0...4	num
V6-Fod	Evaporator fan status with door open	V6	36409	0	38765	12288	RW	Word	-	0...1	flag
V6-FdC	Evaporator fan shutoff delay after compressor deactivation	V6	36406	0	38765	49152	RW	Word	-	0...250	min
V6-FOn	Evaporator fan On time in cyclical regulator mode	V6	36411	0	38766	3	RW	Word	-	0...250	min
V6-FOF	Evaporator fan Off time in cyclical regulator mode	V6	36412	0	38766	12	RW	Word	-	0...250	min
V6-Fnn	Evaporator fan ON time in night mode (duty cycle)	V6	36413	0	38766	48	RW	Word	-	0...250	min
V6-FnF	Evaporator fan OFF time in night mode (duty cycle)	V6	36414	0	38766	192	RW	Word	-	0...250	min
V6-FE1	Variable speed fan probe selection	V6	36513	0	38790	48	RW	Word	-	0...12	num
V6-FEt	Setpoint mode	V6	36514	0	38790	192	RW	Word	-	0...1	flag
V6-FES	Setpoint	V6	36515	0	38790	768	RW	Word	Y	-58...302	°C/°F
V6-FEd	Band	V6	36516	0	38790	3072	RW	Word	-	0.1...50.0	°C/°F
V6-FEu	Cut-off band	V6	36517	0	38790	12288	RW	Word	-	0.0...25.0	°C/°F
V6-FEC	Cut-off differential	V6	36518	0	38790	49152	RW	Word	-	0.1...25.0	°C/°F

Label	Description	Folder	Val. Par. Address	Val. Filter	Vis. Par. Address	Vis. Filter	R/W	Data Size	CPL	Range	MU
V6-FEr	Fan shutoff delay after compressor deactivation	V6	36519	0	38791	3	RW	Word	-	0...250	min
V6-FE2	Minimum day percentage	V6	36520	0	38791	12	RW	Word	-	0...100	%
V6-FE3	Maximum day percentage with compressor on	V6	36521	0	38791	48	RW	Word	-	0...100	%
V6-FE4	Maximum day percentage with compressor off	V6	36522	0	38791	192	RW	Word	-	0...100	%
V6-FE5	Minimum night percentage	V6	36523	0	38791	768	RW	Word	-	0...100	%
V6-FE6	Maximum night percentage with compressor on	V6	36524	0	38791	3072	RW	Word	-	0...100	%
V6-FE7	Maximum night percentage with compressor off	V6	36525	0	38791	12288	RW	Word	-	0...100	%
V6-FE8	Percentage during defrost	V6	36526	0	38791	49152	RW	Word	-	0...100	%
V6-FE9	Percentage in the event of probe error	V6	36527	0	38803	12	RW	Word	-	0...100	%
V6-FEA	Maximum pick-up speed	V6	36528	0	38803	48	RW	Word	-	0...100	%
V6-FEb	Fan pick-up time	V6	36529	0	38803	192	RW	Word	-	0...250	s
V6-FEP	Fan forcing period at pick-up speed	V6	36530	0	38803	768	RW	Word	-	0...250	min
V6-rA1	Temperature alarm probe 1 selection	V6	36428	0	38766	768	RW	Word	-	0...7	num
V6-rA2	Temperature alarm probe 2 selection	V6	36429	0	38766	3072	RW	Word	-	0...7	num
V6-Att	Alarm mode (absolute or relative)	V6	36430	0	38766	12288	RW	Word	-	0...1	flag
V6-AFd	Alarm activation differential	V6	36431	0	38766	49152	RW	Word	-	0.1...25.0	°C/°F
V6-HA1	Maximum alarm 1 threshold	V6	36432	0	38767	3	RW	Word	Y	V6-LA1...302	°C/°F
V6-LA1	Minimum alarm 1 threshold	V6	36433	0	38767	12	RW	Word	Y	-58.0...V6-HA1	°C/°F
V6-HA2	Maximum alarm 2 threshold	V6	36434	0	38767	48	RW	Word	Y	V6-LA2...302	°C/°F
V6-LA2	Minimum alarm 2 threshold	V6	36435	0	38767	192	RW	Word	Y	-58.0...V6-HA2	°C/°F
V6-PAO	Temperature alarm exclusion time from power-on	V6	36436	0	38767	768	RW	Word	-	0...10	hours
V6-dAO	Exclusion time for temperature alarms after a defrost cycle	V6	36438	0	38767	3072	RW	Word	-	0...250	min
V6-OAO	High and low temperature alarms exclusion time after closing the door	V6	36437	0	38767	12288	RW	Word	-	0...10	hours
V6-tdO	Door open alarm exclusion time	V6	36482	0	38767	49152	RW	Word	-	0...250	min
V6-tA1	Probe 1 High/Minimum Alarm Delay	V6	36439	0	38768	3	RW	Word	-	0...250	min
V6-tA2	Probe 2 High/Minimum Alarm Delay	V6	36440	0	38768	12	RW	Word	-	0...250	min

Label	Description	Folder	Val. Par. Address	Val. Filter	Vis. Par. Address	Vis. Filter	R/W	Data Size	CPL	Range	MU
V6-dAt	Defrost ended due to timeout alarm signaling	V6	36398	0	38768	48	RW	Word	-	0...1	flag
V6-EAL	Regulators inhibited by external alarm	V6	36442	0	38768	192	RW	Word	-	0...2	num
V6-rA3	Sets the input used by the two thresholds alarm regulator	V6	36501	0	38788	12288	RW	Word	-	0...8	num
V6-ALL	Low alarm threshold (warning)	V6	36502	0	38788	49152	RW	Word	-	0.0...V6-ALH	num
V6-ALH	High alarm threshold (alarm)	V6	36503	0	38789	3	RW	Word	-	V6-ALL...100	num
V6-dAL	2 thresholds alarm regulator differential	V6	36504	0	38789	12	RW	Word	-	0.1...100	°C/°F
V6-AL1	Minimum persistence time above the ALL threshold due to alarm activation	V6	36505	0	38789	48	RW	Word	-	0...250	min
V6-AL2	Minimum persistence time above the ALH threshold due to alarm activation	V6	36512	0	38790	12	RW	Word	-	0...250	min
V6-tP	Enables alarm acknowledgment with any key	V6	36483	0	38768	768	RW	Word	-	0...1	flag
V6-Art	Regular watchdog alarm activation period	V6	36427	0	38768	3072	RW	Word	-	0...250	min*10
V6-ttA	Manage temperature alarms with door open.	V6	36531	0	38794	3072	RW	Word	-	0...1	flag
V6-dSd	Enable light relay from door switch	V6	36424	0	38768	12288	RW	Word	-	0...1	flag
V6-dLt	Light relay off delay from door closure	V6	36425	0	38768	49152	RW	Word	-	0...250	min
V6-OFL	Enable cold room lights off via key during the delay set in parameter dLt	V6	36426	0	38769	3	RW	Word	-	0...1	flag
V6-dOd	Enable utility shutoff upon door switch activation	V6	36441	0	38769	12	RW	Word	-	0...3	num
V6-dOA	Behavior forced by digital input	V6	36443	0	38769	48	RW	Word	-	0...5	num
V6-PEA	Enable forced behavior from door switch and/or external alarm.	V6	36444	0	38769	192	RW	Word	-	0...3	num
V6-dCO	Compressor activation delay from acknowledgment	V6	36445	0	38769	768	RW	Word	-	0...250	min
V6-dFO	Fan enabling delay from acknowledgment	V6	36446	0	38769	3072	RW	Word	-	0...250	min
V6-ASb	Instrument off active light/auxiliary digital input or key	V6	36472	0	38769	12288	RW	Word	-	0...1	flag
V6-L00	Shared probe	V6	36224	0	38769	49152	RW	Word	-	0...7	num
V6-L01	Distributed viewing (refers to secondary)	V6	36225	0	38770	3	RW	Word	-	0...2	num
V6-L02	Setpoint synchronization	V6	36226	0	38770	12	RW	Word	-	0...1	flag
V6-L03	Defrost synchronization	V6	36227	0	38770	48	RW	Word	-	0...2	num
V6-L04	Inhibit resources at the end of defrost	V6	36228	0	38770	192	RW	Word	-	0...1	flag

Label	Description	Folder	Val. Par. Address	Val. Filter	Vis. Par. Address	Vis. Filter	R/W	Data Size	CPL	Range	MU
V6-L05	Stand-by synchronization	V6	36229	0	38770	768	RW	Word	-	0...1	flag
V6-L06	Lights synchronization	V6	36230	0	38770	3072	RW	Word	-	0...1	flag
V6-L07	Reduced set synchronization	V6	36231	0	38770	12288	RW	Word	-	0...1	flag
V6-L08	AUX synchronization	V6	36232	0	38770	49152	RW	Word	-	0...1	flag
V6-L09	Shared saturation probe	V6	36233	0	38771	3	RW	Word	-	0...1	flag
V6-L10	Resource unlocking timeout during synchronized defrosts	V6	36484	0	38771	12	RW	Word	-	0...250	min
V6-L11	Number of devices connected in Link2	V6	36234	0	38788	48	RW	Word	-	0...8	num
V6-L12	Alarm relay sharing in Link2	V6	36235	0	38788	192	RW	Word	-	0...2	num
V6-L13	Link2 serial frame configuration	V6	36495	0	38787	12288	RW	Word	-	0...1	flag
V6-L14	Force cool mode	V6	36511	0	38790	3	RW	Word	-	0...1	flag
V6-L15	Shared buzzer and alarm silenced via Link2	V6	36491	0	38792	48	RW	Word	-	0...2	num
V6-dcS	Deep cooling setpoint	V6	36418	0	38771	768	RW	Word	Y	-58.0...302	°C/°F
V6-tdc	Deep cooling duration	V6	36419	0	38771	3072	RW	Word	-	0...250	min
V6-dcc	Defrost delay after deep cooling	V6	36420	0	38771	12288	RW	Word	-	0...250	min
V6-ESt	Type of action for the Energy Saving function	V6	36347	0	38771	49152	RW	Word	-	0...8	num
V6-ESF	Night mode activation (Energy Saving)	V6	36415	0	38772	3	RW	Word	-	0...1	flag
V6-Cdt	Door closing time	V6	36416	0	38772	12	RW	Word	-	0...255	min*10
V6-ESo	Low consumption mode disabling timeout (door switch)	V6	36417	0	38772	48	RW	Word	-	0...10	num
V6-OS1	Offset on setpoint 1	V6	36364	0	38772	192	RW	Word	Y	-50.0...50.0	°C/°F
V6-OS2	Offset on setpoint 2	V6	36365	0	38772	768	RW	Word	Y	-50.0...50.0	°C/°F
V6-Od1	Refrigerated cabinets energy saving offset 1	V6	36366	0	38772	3072	RW	Word	Y	-50.0...50.0	°C/°F
V6-Od2	Refrigerated cabinets energy saving offset 2	V6	36367	0	38772	12288	RW	Word	Y	-50.0...50.0	°C/°F
V6-dn1	Differential during energy saving mode 1	V6	36355	0	38772	49152	RW	Word	Y	-58.0...302	°C/°F
V6-dn2	Differential during energy saving mode 2	V6	36356	0	38773	3	RW	Word	Y	-58.0...302	°C/°F
V6-EdH	Weekday energy saving start hour	V6	36341	0	38773	12	RW	Word	-	0...24	hours
V6-Edn	Weekday energy saving start minutes	V6	36342	0	38773	48	RW	Word	-	0...59	min
V6-Edd	Weekday energy saving duration	V6	36343	0	38773	192	RW	Word	-	1...72	hours
V6-EFH	Weekend/holiday energy saving start hour	V6	36344	0	38773	768	RW	Word	-	0...24	hours

Label	Description	Folder	Val. Par. Address	Val. Filter	Vis. Par. Address	Vis. Filter	R/W	Data Size	CPL	Range	MU
V6-EFn	Weekend/holiday energy saving start minutes	V6	36345	0	38773	3072	RW	Word	-	0...59	min
V6-EFd	Weekend/holiday energy saving duration	V6	36346	0	38773	12288	RW	Word	-	1...72	hours
V6-FH	Frame heater probe selection	V6	36447	0	38773	49152	RW	Word	-	0...9	num
V6-FHt	Frame heater period	V6	36449	0	38774	3	RW	Word	-	1...250	s
V6-FH0	Frame heater set	V6	36450	0	38774	12	RW	Word	Y	-58.0...302	°C/°F
V6-FH1	Frame heater offset	V6	36451	0	38774	48	RW	Word	-	0.0...25.0	°C/°F
V6-FH2	Frame heater band	V6	36452	0	38774	192	RW	Word	Y	-58.0...302	°C/°F
V6-FH3	Frame heater minimum percentage/duty-cycle	V6	36453	0	38774	768	RW	Word	-	0...100	%
V6-FH4	Frame heater maximum percentage/day duty-cycle	V6	36454	0	38774	3072	RW	Word	-	0...100	%
V6-FH5	Frame heater maximum percentage/night duty-cycle	V6	36455	0	38774	12288	RW	Word	-	0...100	%
V6-FH6	Frame heater percentage/duty-cycle in defrost	V6	36456	0	38774	49152	RW	Word	-	0...100	%
V6-LOC	Disable terminal	V6	36459	0	38775	3	RW	Word	-	0...1	flag
V6-PS1	Password 1 value	V6	36460	0	38775	12	RW	Word	-	0...250	num
V6-PS2	Password 2 value	V6	36461	0	38775	48	RW	Word	-	0...250	num
V6-ndt	Display with decimal point	V6	36462	0	38775	192	RW	Word	-	0...1	flag
V6-CA1	Analog input 1 calibration	V6	36268	0	38775	768	RW	Word	Y	-30.0...30.0	°C/°F
V6-CA2	Analog input 2 calibration	V6	36269	0	38775	3072	RW	Word	Y	-30.0...30.0	°C/°F
V6-CA3	Analog input 3 calibration	V6	36270	0	38775	12288	RW	Word	Y	-30.0...30.0	°C/°F
V6-CA4	Analog input 4 calibration	V6	36271	0	38775	49152	RW	Word	Y	-30.0...30.0	°C/°F
V6-CA5	Analog input 5 calibration	V6	36272	0	38776	3	RW	Word	Y	-30.0...30.0	°C/°F
V6-CA6	Analog input 6 calibration	V6	36273	0	38776	12	RW	Word	Y	-30.0...30.0	bar/psi
V6-CA7	Analog input 7 calibration	V6	36274	0	38776	48	RW	Word	Y	-30.0...30.0	bar/psi
V6-LdL	Minimum display value	V6	36463	0	38776	192	RW	Word	Y	-58.0...V6-HdL	°C/°F
V6-HdL	Maximum display value	V6	36464	0	38776	768	RW	Word	Y	V6-LdL...302	°C/°F
V6-ddL	Display lock mode during a defrost	V6	36465	0	38776	3072	RW	Word	-	0...2	num
V6-Ldd	Display lock timeout from end of defrost	V6	36466	0	38776	12288	RW	Word	-	0...250	min
V6-dro	Select °C / °F	V6	36467	0	38776	49152	RW	Word	-	0...1	flag
V6-SbP	Pressure unit of measure	V6	36468	0	38777	3	RW	Word	-	0...1	flag

Label	Description	Folder	Val. Par. Address	Val. Filter	Vis. Par. Address	Vis. Filter	R/W	Data Size	CPL	Range	MU
V6-ddd	Select main display value	V6	36469	0	38777	12	RW	Word	-	0...8	num
V6-ddE	Resource displayed on ECHO	V6	36470	0	38777	48	RW	Word	-	0...11	num
V6-rPH	Receiver maximum valve opening %	V6	36421	0	38777	192	RW	Word	-	0...5	num
V6-H00	Select analog input type NTC/PTC	V6	36236	0	38777	768	RW	Word	-	0...2	num
V6-H02	Function activation time from terminal	V6	36471	0	38777	3072	RW	Word	-	0...250	s
V6-H08	Stand-by operating mode	V6	36473	0	38777	12288	RW	Word	-	0...2	num
V6-H11	Digital input 1 configurability and polarity	V6	36239	0	38777	49152	RW	Word	Y	-19...19	num
V6-H12	Digital input 2 configurability and polarity	V6	36240	0	38778	3	RW	Word	Y	-19...19	num
V6-H13	Digital input 3 configurability and polarity	V6	36241	0	38778	12	RW	Word	Y	-19...19	num
V6-H14	Digital input 4 configurability and polarity	V6	36242	0	38778	48	RW	Word	Y	-19...19	num
V6-H15	Digital input 5 configurability and polarity	V6	36243	0	38778	192	RW	Word	Y	-19...19	num
V6-H16	Digital input 6 configurability and polarity	V6	36244	0	38778	768	RW	Word	Y	-19...19	num
V6-H17	Digital input 7 configurability and polarity	V6	36245	0	38778	3072	RW	Word	Y	-19...19	num
V6-H18	Digital input 8 configurability and polarity	V6	36246	0	38778	12288	RW	Word	Y	-19...19	num
V6-i01	Digital input 9 configurability and polarity	V6	36506	0	38789	192	RW	Word	Y	-19...19	num
V6-i02	Digital input 10 configurability and polarity	V6	36507	0	38789	768	RW	Word	Y	-19...19	num
V6-dti	Digital inputs 1 and 2 delay unit of measure	V6	36255	0	38778	49152	RW	Word	-	0...1	flag
V6-d11	D.I. 1 activation indication delay time	V6	36247	0	38779	3	RW	Word	-	0...255	min
V6-d12	D.I. 2 activation indication delay time	V6	36248	0	38779	12	RW	Word	-	0...255	min
V6-d13	D.I. 3 activation indication delay time	V6	36249	0	38779	48	RW	Word	-	0...255	min
V6-d14	D.I. 4 activation indication delay time	V6	36250	0	38779	192	RW	Word	-	0...255	min
V6-d15	D.I. 5 activation indication delay time	V6	36251	0	38779	768	RW	Word	-	0...255	min
V6-d16	D.I. 6 activation indication delay time	V6	36252	0	38779	3072	RW	Word	-	0...255	min
V6-d17	D.I. 7 activation indication delay time	V6	36253	0	38779	12288	RW	Word	-	0...255	min
V6-d18	D.I. 8 activation indication delay time	V6	36254	0	38779	49152	RW	Word	-	0...255	min
V6-01i	D.I. 9 activation indication delay time	V6	36508	0	38789	3072	RW	Word	-	0...255	min

Label	Description	Folder	Val. Par. Address	Val. Filter	Vis. Par. Address	Vis. Filter	R/W	Data Size	CPL	Range	MU
V6-02i	D.I. 10 activation indication delay time	V6	36509	0	38789	12288	RW	Word	-	0...255	min
V6-H21	Configurability of digital output 1	V6	36276	0	38780	3	RW	Word	-	0...19	num
V6-H22	Configurability of digital output 2	V6	36277	0	38780	12	RW	Word	-	0...19	num
V6-H23	Configurability of digital output 3	V6	36278	0	38780	48	RW	Word	-	0...19	num
V6-H24	Configurability of digital output 4	V6	36279	0	38780	192	RW	Word	-	0...19	num
V6-H25	Configurability of digital output 5	V6	36280	0	38780	768	RW	Word	-	0...19	num
V6-H27	Configurability of digital output 7	V6	36282	0	38780	12288	RW	Word	-	0...19	num
V6-H29	Enable buzzer	V6	36283	0	38780	49152	RW	Word	-	0...1	num
V6-d01	Configurability of digital output 8	V6	36499	0	38788	768	RW	Word	-	0...19	num
V6-d02	Configurability of digital output 9	V6	36500	0	38788	3072	RW	Word	-	0...19	num
V6-H31	Configurability of the UP key	V6	36474	0	38781	3	RW	Word	-	0...9	num
V6-H32	Configurability of the DOWN key	V6	36475	0	38781	12	RW	Word	-	0...9	num
V6-H33	Configurability of the ESC key	V6	36476	0	38781	48	RW	Word	-	0...9	num
V6-H34	Configurability of the Free 1 key	V6	36477	0	38781	192	RW	Word	-	0...9	num
V6-H35	Configurability of the Free 2 key	V6	36478	0	38781	768	RW	Word	-	0...9	num
V6-H36	Configurability of the Free 3 key	V6	36479	0	38781	3072	RW	Word	-	0...9	num
V6-H37	Configurability of the Free 4 key	V6	36480	0	38781	12288	RW	Word	-	0...9	num
V6-H41	Configurability of analog input 1	V6	36256	0	38781	49152	RW	Word	-	0...2	num
V6-H42	Configurability of analog input 2	V6	36257	0	38782	3	RW	Word	-	0...2	num
V6-H43	Configurability of analog input 3	V6	36258	0	38782	12	RW	Word	-	0...2	num
V6-H44	Configurability of analog input 4	V6	36259	0	38782	48	RW	Word	-	0...2	num
V6-H45	Configurability of analog input 5	V6	36260	0	38782	192	RW	Word	-	0...2	num
V6-H46	Configurability of analog input 6	V6	36261	0	38782	768	RW	Word	-	0...2	num
V6-H47	Configurability of analog input 7	V6	36262	0	38782	3072	RW	Word	-	0...2	num
V6-H48	Configurability of analog input 8	V6	36510	0	38789	49152	RW	Word	-	0...2	num
V6-H50	Configurability of analog output 1	V6	36284	0	38782	12288	RW	Word	-	0...1	num
V6-H51	Function associated with analog output	V6	36285	0	38782	49152	RW	Word	-	0...3	num
V6-H68	RTC present	V6	36286	0	38783	3	RW	Word	-	0...1	num
V6-H70	Selection of 1st sensor for virtual probe	V6	36264	0	38783	12	RW	Word	-	0...5	num
V6-H71	Selection of 2nd sensor for virtual probe	V6	36265	0	38783	48	RW	Word	-	0...5	num

Label	Description	Folder	Val. Par. Address	Val. Filter	Vis. Par. Address	Vis. Filter	R/W	Data Size	CPL	Range	MU
V6-H72	Day virtual probe calculation %	V6	36266	0	38783	192	RW	Word	-	0...100	%
V6-H73	Night virtual probe calculation %	V6	36267	0	38783	768	RW	Word	-	0...100	%
V6-H74	Selection of 1st sensor for filtered virtual probe	V6	36496	0	38787	49152	RW	Word	-	0...65635	num
V6-H75	Percentage in thousandths of the incoming signal for filtered virtual probe	V6	36497	0	38788	3	RW	Word	-	0...65635	num
V6-H76	Filtered virtual probe offset	V6	36498	0	38788	12	RW	Word	-	0...65635	num
V6-EtY	Selection of electronic expansion valve driver	V6	36481	0	38783	3072	RW	Word	-	0...1	flag
V6-UL	Visibility of parameter transfer function (Device -> UNICARD/MFK)	V6	-	-	38786	3	RW	Word	-	0...3	num
V6-dL	Visibility of parameter transfer function (UNICARD/MFK -> Device)	V6	-	-	38786	12	RW	Word	-	0...3	num
V6-Fr	Visibility of UNICARD/MFK formatting function	V6	-	-	38786	48	RW	Word	-	0...3	num
V6-OHP	Selection of oil temperature probe	V6	36488	0	38786	12288	RW	Word	-	0...8	num
V6-OSP	Oil heater setpoint	V6	36489	0	38786	49152	RW	Word	Y	V6-OLS...V6-OHS	°C/°F
V6-OHd	Oil heater differential	V6	36490	0	38787	3	RW	Word	-	0.1...25.0	°C/°F
V6-OHS	Maximum oil heater setpoint value that can be set	V6	36492	0	38787	48	RW	Word	Y	V6-OLS...302	°C/°F
V6-OLS	Minimum oil heater setpoint value that can be set	V6	36493	0	38787	192	RW	Word	Y	-58.0...V6-OHS	°C/°F
Application 7 parameters											
V7-rE	Regulation type	V7	36732	0	38848	3	RW	Word	-	0...6	num
V7-rP1	Thermostat regulation probe 1	V7	36733	0	38848	12	RW	Word	-	0...8	num
V7-rP2	Thermostat regulation probe 2	V7	36734	0	38848	48	RW	Word	-	0...9	num
V7-SP1	Regulation setpoint 1	V7	36735	0	38848	192	RW	Word	Y	V7-LS1...V7-HS1	°C/°F
V7-dF1	Setpoint differential 1	V7	36736	0	38848	768	RW	Word	Y	-58.0...302	°C/°F
V7-SP2	Regulation setpoint 2	V7	36737	0	38848	3072	RW	Word	Y	V7-LS2...V7-HS2	°C/°F
V7-dF2	Setpoint differential 2	V7	36738	0	38848	12288	RW	Word	Y	-58.0...302	°C/°F
V7-Stt	Differential management mode	V7	36741	0	38848	49152	RW	Word	-	0...1	flag
V7-HS1	Maximum value that can be set for Setpoint 1	V7	36744	0	38849	3	RW	Word	Y	V7-LS1...V7-HdL	°C/°F
V7-LS1	Minimum value that can be set for Setpoint 1	V7	36745	0	38849	12	RW	Word	Y	V7-LdL...V7-HS1	°C/°F
V7-HS2	Maximum value that can be set for Setpoint 2	V7	36746	0	38849	48	RW	Word	Y	V7-LS2...V7-HdL	°C/°F

Label	Description	Folder	Val. Par. Address	Val. Filter	Vis. Par. Address	Vis. Filter	R/W	Data Size	CPL	Range	MU
V7-LS2	Minimum value that can be set for Setpoint 2	V7	36747	0	38849	192	RW	Word	Y	V7-LdL...V7-HS2	°C/°F
V7-HC1	Setpoint 1 operating mode (Heating/Cooling)	V7	36742	0	38849	768	RW	Word	-	0...1	flag
V7-HC2	Setpoint 2 operating mode (Heating/Cooling)	V7	36743	0	38849	3072	RW	Word	-	0...1	flag
V7-Cit	Minimum compressor output activation time	V7	36752	0	38849	49152	RW	Word	-	0...250	min
V7-CAt	Maximum compressor output activation time	V7	36753	0	38850	3	RW	Word	-	0...250	min
V7-Ont	Compressor output ON time if regulation probe is faulty	V7	36758	0	38850	12	RW	Word	-	0...250	min
V7-OFt	Compressor output OFF time if regulation probe is faulty	V7	36759	0	38850	48	RW	Word	-	0...250	min
V7-dOn	Compressor output activation delay from call	V7	36754	0	38850	192	RW	Word	-	0...250	s
V7-dOF	Compressor output activation delay from switch-off	V7	36755	0	38850	768	RW	Word	-	0...250	min
V7-dbi	Delay between two consecutive compressor output power-ons	V7	36756	0	38850	3072	RW	Word	-	0...250	min
V7-OdO	Output activation delay at startup	V7	36757	0	38850	12288	RW	Word	-	0...250	min
V7-CFP	Condenser pre-ventilation time in Heat/Cool	V7	36841	0	38851	12	RW	Word	-	0...255	s
V7-CFd	Condenser fan cut-out during defrosting.	V7	36842	0	38851	48	RW	Word	-	0...1	flag
V7-OF1	Remote offset	V7	36763	0	38851	192	RW	Word	Y	-50.0...50.0	°C/°F
V7-Pot	Pump down time	V7	36869	0	38882	192	RW	Word	-	0...250	s
V7-SS1	Compressor softstart: advance hotgas valve opening	V7	36870	0	38882	768	RW	Word	-	0...250	s
V7-SS2	Compressor softstart: delay hotgas valve closing	V7	36871	0	38882	3072	RW	Word	-	0...250	s
V7-dP1	Select defrost probe 1	V7	36764	0	38851	768	RW	Word	-	0...8	num
V7-dP2	Defrost probe 2 selection	V7	36765	0	38851	3072	RW	Word	-	0...8	num
V7-dty	Type of defrost	V7	36768	0	38851	12288	RW	Word	-	0...4	num
V7-dFt	Dual evaporator defrost activation mode	V7	36766	0	38851	49152	RW	Word	-	0...2	num
V7-dit	Interval between defrosts	V7	36769	0	38852	3	RW	Word	-	0...250	hours
V7-dt1	Unit of measure for defrost intervals	V7	36772	0	38852	12	RW	Word	-	0...2	num
V7-dt2	Unit of measure for defrost duration	V7	36773	0	38852	48	RW	Word	-	0...2	num
V7-dCt	Defrost interval count mode	V7	36767	0	38852	192	RW	Word	-	0...5	num
V7-dOH	Defrost cycle activation delay from the call	V7	36774	0	38852	768	RW	Word	-	0...250	min

Label	Description	Folder	Val. Par. Address	Val. Filter	Vis. Par. Address	Vis. Filter	R/W	Data Size	CPL	Range	MU
V7-dE1	Evaporator 1 defrost maximum duration	V7	36770	0	38852	3072	RW	Word	-	1...250	min
V7-dE2	Evaporator 2 defrost maximum duration	V7	36771	0	38852	12288	RW	Word	-	1...250	min
V7-dS1	Evaporator 1 defrost end temperature	V7	36776	0	38852	49152	RW	Word	Y	-58.0...302	°C/°F
V7-dS2	Evaporator 2 defrost end temperature	V7	36777	0	38853	3	RW	Word	Y	-58.0...302	°C/°F
V7-dSS	Temperature threshold for starting defrost	V7	36775	0	38853	12	RW	Word	Y	-58.0...302	°C/°F
V7-dPO	Defrost activation request at power-on	V7	36778	0	38853	48	RW	Word	-	0...1	flag
V7-tcd	Compressor output activation/deactivation time before a defrost	V7	36779	0	38853	192	RW	Word	Y	-60...60	min
V7-ndE	minimum defrost duration time	V7	36780	0	38853	768	RW	Word	-	0...250	min
V7-PdC	Hot gas extraction time at the end of the defrost	V7	36781	0	38853	3072	RW	Word	-	0...250	min
V7-tPd	Pump down time before defrost start	V7	36783	0	38853	12288	RW	Word	-	0...255	min
V7-dPH	Regular defrost start hour	V7	36722	0	38853	49152	RW	Word	-	0...24	hours
V7-dPn	Regular defrost start minutes	V7	36723	0	38854	3	RW	Word	-	0...59	min
V7-dPd	Regular defrost interval duration	V7	36724	0	38854	12	RW	Word	-	1...7	day
V7-Fd1	1st weekend/holiday day	V7	36671	0	38854	48	RW	Word	-	0...7	num
V7-Fd2	2nd weekend/holiday day	V7	36672	0	38854	192	RW	Word	-	0...7	num
V7-Edt	Timeout and defrost end temperature specific to each event	V7	36673	0	38854	768	RW	Word	-	0...1	flag
V7-Fdn	Weekday defrost number	V7	36621	0	38888	3	RW	Word	-	0...250	num
V7-FFn	Weekend/holiday defrost number	V7	36622	0	38888	12	RW	Word	-	0...250	num
V7-PrH	Basin heater pre-activation time	V7	36878	0	38883	3072	RW	Word	-	0...255	min
V7-d1H	Weekday defrost no. 1 start hour	V7	36674	0	38854	3072	RW	Word	-	0...24	hours
V7-d1n	Weekday defrost no. 1 start minute	V7	36675	0	38854	12288	RW	Word	-	0...59	min
V7-d1t	1st weekday defrost duration	V7	36676	0	38854	49152	RW	Word	-	0...250	min
V7-d1S	1st weekday defrost end temperature	V7	36677	0	38855	3	RW	Word	Y	-58.0...302	°C/°F
V7-d2H	Weekday defrost no. 2 start hour	V7	36678	0	38855	12	RW	Word	-	V7-d1H...24	hours
V7-d2n	Weekday defrost no. 2 start minutes	V7	36679	0	38855	48	RW	Word	-	0...59	min
V7-d2t	2nd weekday defrost duration	V7	36680	0	38855	192	RW	Word	-	0...250	min
V7-d2S	2nd weekday defrost end temperature	V7	36681	0	38855	768	RW	Word	Y	-58.0...302	°C/°F
V7-d3H	Weekday defrost no. 3 start hour	V7	36682	0	38855	3072	RW	Word	-	V7-d2H...24	hours
V7-d3n	Weekday defrost no. 3 start minutes	V7	36683	0	38855	12288	RW	Word	-	0...59	min

Label	Description	Folder	Val. Par. Address	Val. Filter	Vis. Par. Address	Vis. Filter	R/W	Data Size	CPL	Range	MU
V7-d3t	3rd weekday defrost duration	V7	36684	0	38855	49152	RW	Word	-	0...250	min
V7-d3S	3rd weekday defrost end temperature	V7	36685	0	38856	3	RW	Word	Y	-58.0...302	°C/°F
V7-d4H	Weekday defrost no. 4 start hour	V7	36686	0	38856	12	RW	Word	-	V7-d3H...24	hours
V7-d4n	Weekday defrost no. 4 start minutes	V7	36687	0	38856	48	RW	Word	-	0...59	min
V7-d4t	4th weekday defrost duration	V7	36688	0	38856	192	RW	Word	-	0...250	min
V7-d4S	4th weekday defrost end temperature	V7	36689	0	38856	768	RW	Word	Y	-58.0...302	°C/°F
V7-d5H	Weekday defrost no. 5 start hour	V7	36690	0	38856	3072	RW	Word	-	V7-d4H...24	hours
V7-d5n	Weekday defrost no. 5 start minutes	V7	36691	0	38856	12288	RW	Word	-	0...59	min
V7-d5t	5th weekday defrost duration	V7	36692	0	38856	49152	RW	Word	-	0...250	min
V7-d5S	5th weekday defrost end temperature	V7	36693	0	38857	3	RW	Word	Y	-58.0...302	°C/°F
V7-d6H	Weekday defrost no. 6 start hour	V7	36694	0	38857	12	RW	Word	-	V7-d5H...24	hours
V7-d6n	Weekday defrost no. 6 start minutes	V7	36695	0	38857	48	RW	Word	-	0...59	min
V7-d6t	6th weekday defrost duration	V7	36696	0	38857	192	RW	Word	-	0...250	min
V7-d6S	6th weekday defrost end temperature	V7	36697	0	38857	768	RW	Word	Y	-58.0...302	°C/°F
V7-F1H	Weekend/holiday defrost no. 1 start hour	V7	36698	0	38857	3072	RW	Word	-	0...24	hours
V7-F1n	Weekend/holiday defrost no. 1 start minute	V7	36699	0	38857	12288	RW	Word	-	0...59	min
V7-F1t	1st weekend/holiday defrost duration	V7	36700	0	38857	49152	RW	Word	-	0...250	min
V7-F1S	1st weekend/holiday defrost end temperature	V7	36701	0	38858	3	RW	Word	Y	-58.0...302	°C/°F
V7-F2H	Weekend/holiday defrost no. 2 start hour	V7	36702	0	38858	12	RW	Word	-	V7-F1H...24	hours
V7-F2n	Weekend/holiday defrost no. 2 start minutes	V7	36703	0	38858	48	RW	Word	-	0...59	min
V7-F2t	2nd weekend/holiday defrost duration	V7	36704	0	38858	192	RW	Word	-	0...250	min
V7-F2S	2nd weekend/holiday defrost end temperature	V7	36705	0	38858	768	RW	Word	Y	-58.0...302	°C/°F
V7-F3H	Weekend/holiday defrost no. 3 start hour	V7	36706	0	38858	3072	RW	Word	-	V7-F2H...24	hours
V7-F3n	Weekend/holiday defrost no. 3 start minutes	V7	36707	0	38858	12288	RW	Word	-	0...59	min
V7-F3t	3rd weekend/holiday defrost duration	V7	36708	0	38858	49152	RW	Word	-	0...250	min
V7-F3S	3rd weekend/holiday defrost end temperature	V7	36709	0	38859	3	RW	Word	Y	-58.0...302	°C/°F
V7-F4H	Weekend/holiday defrost no. 4 start hour	V7	36710	0	38859	12	RW	Word	-	V7-F3H...24	hours

Label	Description	Folder	Val. Par. Address	Val. Filter	Vis. Par. Address	Vis. Filter	R/W	Data Size	CPL	Range	MU
V7-F4n	Weekend/holiday defrost no. 4 start minutes	V7	36711	0	38859	48	RW	Word	-	0...59	min
V7-F4t	4th weekend/holiday defrost duration	V7	36712	0	38859	192	RW	Word	-	0...250	min
V7-F4S	4th weekend/holiday defrost end temperature	V7	36713	0	38859	768	RW	Word	Y	-58.0...302	°C/°F
V7-F5H	Weekend/holiday defrost no. 5 start hour	V7	36714	0	38859	3072	RW	Word	-	V7-F4H...24	hours
V7-F5n	Weekend/holiday defrost no. 5 start minutes	V7	36715	0	38859	12288	RW	Word	-	0...59	min
V7-F5t	5th weekend/holiday defrost duration	V7	36716	0	38859	49152	RW	Word	-	0...250	min
V7-F5S	5th weekend/holiday defrost end temperature	V7	36717	0	38860	3	RW	Word	Y	-58.0...302	°C/°F
V7-F6H	Weekend/holiday defrost no. 6 start hour	V7	36718	0	38860	12	RW	Word	-	V7-F5H...24	hours
V7-F6n	Weekend/holiday defrost no. 6 start minutes	V7	36719	0	38860	48	RW	Word	-	0...59	min
V7-F6t	6th weekend/holiday defrost duration	V7	36720	0	38860	192	RW	Word	-	0...250	min
V7-F6S	6th weekend/holiday defrost end temperature	V7	36721	0	38860	768	RW	Word	Y	-58.0...302	°C/°F
V7-FP1	Selection of evaporator fan probe in normal mode	V7	36784	0	38860	3072	RW	Word	-	0...7	num
V7-FP2	Selection of evaporator fan probe in defrost	V7	36785	0	38860	12288	RW	Word	-	0...7	num
V7-FPt	FSt parameter mode (absolute or relative)	V7	36786	0	38860	49152	RW	Word	-	0...1	flag
V7-FSt	Evaporator fan disabling temperature	V7	36787	0	38861	3	RW	Word	Y	-58.0...302	°C/°F
V7-FAd	Evaporator fan trigger differential	V7	36788	0	38861	12	RW	Word	-	0.1...25.0	°C/°F
V7-Fdt	Evaporator fan activation delay time after a defrost cycle	V7	36789	0	38861	48	RW	Word	-	0...250	min
V7-dt	Dripping time	V7	36794	0	38861	192	RW	Word	-	0...250	min
V7-dFd	Evaporator fan cut-out during defrost	V7	36792	0	38861	768	RW	Word	-	0...1	flag
V7-FCO	Evaporator fan status with compressor output Off	V7	36791	0	38861	3072	RW	Word	-	0...4	num
V7-Fod	Evaporator fan status with door open	V7	36793	0	38861	12288	RW	Word	-	0...1	flag
V7-FdC	Evaporator fan shutoff delay after compressor deactivation	V7	36790	0	38861	49152	RW	Word	-	0...250	min
V7-FOn	Evaporator fan On time in cyclical regulator mode	V7	36795	0	38862	3	RW	Word	-	0...250	min
V7-FOF	Evaporator fan Off time in cyclical regulator mode	V7	36796	0	38862	12	RW	Word	-	0...250	min
V7-Fnn	Evaporator fan ON time in night mode (duty cycle)	V7	36797	0	38862	48	RW	Word	-	0...250	min

Label	Description	Folder	Val. Par. Address	Val. Filter	Vis. Par. Address	Vis. Filter	R/W	Data Size	CPL	Range	MU
V7-FnF	Evaporator fan OFF time in night mode (duty cycle)	V7	36798	0	38862	192	RW	Word	-	0...250	min
V7-FE1	Variable speed fan probe selection	V7	36897	0	38886	48	RW	Word	-	0...12	num
V7-FEt	Setpoint mode	V7	36898	0	38886	192	RW	Word	-	0...1	flag
V7-FES	Setpoint	V7	36899	0	38886	768	RW	Word	Y	-58...302	°C/°F
V7-FEd	Band	V7	36900	0	38886	3072	RW	Word	-	0.1...50.0	°C/°F
V7-FEu	Cut-off band	V7	36901	0	38886	12288	RW	Word	-	0.0...25.0	°C/°F
V7-FEC	Cut-off differential	V7	36902	0	38886	49152	RW	Word	-	0.1...25.0	°C/°F
V7-FEr	Fan shutoff delay after compressor deactivation	V7	36903	0	38887	3	RW	Word	-	0...250	min
V7-FE2	Minimum day percentage	V7	36904	0	38887	12	RW	Word	-	0...100	%
V7-FE3	Maximum day percentage with compressor on	V7	36905	0	38887	48	RW	Word	-	0...100	%
V7-FE4	Maximum day percentage with compressor off	V7	36906	0	38887	192	RW	Word	-	0...100	%
V7-FE5	Minimum night percentage	V7	36907	0	38887	768	RW	Word	-	0...100	%
V7-FE6	Maximum night percentage with compressor on	V7	36908	0	38887	3072	RW	Word	-	0...100	%
V7-FE7	Maximum night percentage with compressor off	V7	36909	0	38887	12288	RW	Word	-	0...100	%
V7-FE8	Percentage during defrost	V7	36910	0	38887	49152	RW	Word	-	0...100	%
V7-FE9	Percentage in the event of probe error	V7	36911	0	38899	12	RW	Word	-	0...100	%
V7-FEA	Maximum pick-up speed	V7	36912	0	38899	48	RW	Word	-	0...100	%
V7-FEb	Fan pick-up time	V7	36913	0	38899	192	RW	Word	-	0...250	s
V7-FEP	Fan forcing period at pick-up speed	V7	36914	0	38899	768	RW	Word	-	0...250	min
V7-rA1	Temperature alarm probe 1 selection	V7	36812	0	38862	768	RW	Word	-	0...7	num
V7-rA2	Temperature alarm probe 2 selection	V7	36813	0	38862	3072	RW	Word	-	0...7	num
V7-Att	Alarm mode (absolute or relative)	V7	36814	0	38862	12288	RW	Word	-	0...1	flag
V7-AFd	Alarm activation differential	V7	36815	0	38862	49152	RW	Word	-	0.1...25.0	°C/°F
V7-HA1	Maximum alarm 1 threshold	V7	36816	0	38863	3	RW	Word	Y	V7-LA1...302	°C/°F
V7-LA1	Minimum alarm 1 threshold	V7	36817	0	38863	12	RW	Word	Y	-58.0...V7-HA1	°C/°F
V7-HA2	Maximum alarm 2 threshold	V7	36818	0	38863	48	RW	Word	Y	V7-LA2...302	°C/°F
V7-LA2	Minimum alarm 2 threshold	V7	36819	0	38863	192	RW	Word	Y	-58.0...V7-HA2	°C/°F

Label	Description	Folder	Val. Par. Address	Val. Filter	Vis. Par. Address	Vis. Filter	R/W	Data Size	CPL	Range	MU
V7-PAO	Temperature alarm exclusion time from power-on	V7	36820	0	38863	768	RW	Word	-	0...10	hours
V7-dAO	Exclusion time for temperature alarms after a defrost cycle	V7	36822	0	38863	3072	RW	Word	-	0...250	min
V7-OAO	High and low temperature alarms exclusion time after closing the door	V7	36821	0	38863	12288	RW	Word	-	0...10	hours
V7-tdO	Door open alarm exclusion time	V7	36866	0	38863	49152	RW	Word	-	0...250	min
V7-tA1	Probe 1 High/Minimum Alarm Delay	V7	36823	0	38864	3	RW	Word	-	0...250	min
V7-tA2	Probe 2 High/Minimum Alarm Delay	V7	36824	0	38864	12	RW	Word	-	0...250	min
V7-dAt	Defrost ended due to timeout alarm signaling	V7	36782	0	38864	48	RW	Word	-	0...1	flag
V7-EAL	Regulators inhibited by external alarm	V7	36826	0	38864	192	RW	Word	-	0...2	num
V7-rA3	Sets the input used by the two thresholds alarm regulator	V7	36885	0	38884	12288	RW	Word	-	0...8	num
V7-ALL	Low alarm threshold (warning)	V7	36886	0	38884	49152	RW	Word	-	0.0...V7-ALH	num
V7-ALH	High alarm threshold (alarm)	V7	36887	0	38885	3	RW	Word	-	V7-ALL...100	num
V7-dAL	2 thresholds alarm regulator differential	V7	36888	0	38885	12	RW	Word	-	0.1...100	°C/°F
V7-AL1	Minimum persistence time above the ALL threshold due to alarm activation	V7	36889	0	38885	48	RW	Word	-	0...250	min
V7-AL2	Minimum persistence time above the ALH threshold due to alarm activation	V7	36896	0	38886	12	RW	Word	-	0...250	min
V7-tP	Enables alarm acknowledgment with any key	V7	36867	0	38864	768	RW	Word	-	0...1	flag
V7-Art	Regular watchdog alarm activation period	V7	36811	0	38864	3072	RW	Word	-	0...250	min*10
V7-ttA	Manage temperature alarms with door open.	V7	36915	0	38890	3072	RW	Word	-	0...1	flag
V7-dSd	Enable light relay from door switch	V7	36808	0	38864	12288	RW	Word	-	0...1	flag
V7-dLt	Light relay off delay from door closure	V7	36809	0	38864	49152	RW	Word	-	0...250	min
V7-OFL	Enable cold room lights off via key during the delay set in parameter dLt	V7	36810	0	38865	3	RW	Word	-	0...1	flag
V7-dOd	Enable utility shutoff upon door switch activation	V7	36825	0	38865	12	RW	Word	-	0...3	num
V7-dOA	Behavior forced by digital input	V7	36827	0	38865	48	RW	Word	-	0...5	num
V7-PEA	Enable forced behavior from door switch and/or external alarm.	V7	36828	0	38865	192	RW	Word	-	0...3	num

Label	Description	Folder	Val. Par. Address	Val. Filter	Vis. Par. Address	Vis. Filter	R/W	Data Size	CPL	Range	MU
V7-dCO	Compressor activation delay from acknowledgment	V7	36829	0	38865	768	RW	Word	-	0...250	min
V7-dFO	Fan enabling delay from acknowledgment	V7	36830	0	38865	3072	RW	Word	-	0...250	min
V7-ASb	Instrument off active light/auxiliary digital input or key	V7	36856	0	38865	12288	RW	Word	-	0...1	flag
V7-L00	Shared probe	V7	36608	0	38865	49152	RW	Word	-	0...7	num
V7-L01	Distributed viewing (refers to secondary)	V7	36609	0	38866	3	RW	Word	-	0...2	num
V7-L02	Setpoint synchronization	V7	36610	0	38866	12	RW	Word	-	0...1	flag
V7-L03	Defrost synchronization	V7	36611	0	38866	48	RW	Word	-	0...2	num
V7-L04	Inhibit resources at the end of defrost	V7	36612	0	38866	192	RW	Word	-	0...1	flag
V7-L05	Stand-by synchronization	V7	36613	0	38866	768	RW	Word	-	0...1	flag
V7-L06	Lights synchronization	V7	36614	0	38866	3072	RW	Word	-	0...1	flag
V7-L07	Reduced set synchronization	V7	36615	0	38866	12288	RW	Word	-	0...1	flag
V7-L08	AUX synchronization	V7	36616	0	38866	49152	RW	Word	-	0...1	flag
V7-L09	Shared saturation probe	V7	36617	0	38867	3	RW	Word	-	0...1	flag
V7-L10	Resource unlocking timeout during synchronized defrosts	V7	36868	0	38867	12	RW	Word	-	0...250	min
V7-L11	Number of devices connected in Link2	V7	36618	0	38884	48	RW	Word	-	0...8	num
V7-L12	Alarm relay sharing in Link2	V7	36619	0	38884	192	RW	Word	-	0...2	num
V7-L13	Link2 serial frame configuration	V7	36879	0	38883	12288	RW	Word	-	0...1	flag
V7-L14	Force cool mode	V7	36895	0	38886	3	RW	Word	-	0...1	flag
V7-L15	Shared buzzer and alarm silenced via Link2	V7	36875	0	38888	48	RW	Word	-	0...2	num
V7-dcS	Deep cooling setpoint	V7	36802	0	38867	768	RW	Word	Y	-58.0...302	°C/°F
V7-tdc	Deep cooling duration	V7	36803	0	38867	3072	RW	Word	-	0...250	min
V7-dcc	Defrost delay after deep cooling	V7	36804	0	38867	12288	RW	Word	-	0...250	min
V7-ESt	Type of action for the Energy Saving function	V7	36731	0	38867	49152	RW	Word	-	0...8	num
V7-ESF	Night mode activation (Energy Saving)	V7	36799	0	38868	3	RW	Word	-	0...1	flag
V7-Cdt	Door closing time	V7	36800	0	38868	12	RW	Word	-	0...255	min*10
V7-ESo	Low consumption mode disabling timeout (door switch)	V7	36801	0	38868	48	RW	Word	-	0...10	num
V7-OS1	Offset on setpoint 1	V7	36748	0	38868	192	RW	Word	Y	-50.0...50.0	°C/°F
V7-OS2	Offset on setpoint 2	V7	36749	0	38868	768	RW	Word	Y	-50.0...50.0	°C/°F

Label	Description	Folder	Val. Par. Address	Val. Filter	Vis. Par. Address	Vis. Filter	R/W	Data Size	CPL	Range	MU
V7-Od1	Refrigerated cabinets energy saving offset 1	V7	36750	0	38868	3072	RW	Word	Y	-50.0...50.0	°C/°F
V7-Od2	Refrigerated cabinets energy saving offset 2	V7	36751	0	38868	12288	RW	Word	Y	-50.0...50.0	°C/°F
V7-dn1	Differential during energy saving mode 1	V7	36739	0	38868	49152	RW	Word	Y	-58.0...302	°C/°F
V7-dn2	Differential during energy saving mode 2	V7	36740	0	38869	3	RW	Word	Y	-58.0...302	°C/°F
V7-EdH	Weekday energy saving start hour	V7	36725	0	38869	12	RW	Word	-	0...24	hours
V7-Edn	Weekday energy saving start minutes	V7	36726	0	38869	48	RW	Word	-	0...59	min
V7-Edd	Weekday energy saving duration	V7	36727	0	38869	192	RW	Word	-	1...72	hours
V7-EFH	Weekend/holiday energy saving start hour	V7	36728	0	38869	768	RW	Word	-	0...24	hours
V7-EFn	Weekend/holiday energy saving start minutes	V7	36729	0	38869	3072	RW	Word	-	0...59	min
V7-EFd	Weekend/holiday energy saving duration	V7	36730	0	38869	12288	RW	Word	-	1...72	hours
V7-FH	Frame heater probe selection	V7	36831	0	38869	49152	RW	Word	-	0...9	num
V7-FHt	Frame heater period	V7	36833	0	38870	3	RW	Word	-	1...250	s
V7-FH0	Frame heater set	V7	36834	0	38870	12	RW	Word	Y	-58.0...302	°C/°F
V7-FH1	Frame heater offset	V7	36835	0	38870	48	RW	Word	-	0.0...25.0	°C/°F
V7-FH2	Frame heater band	V7	36836	0	38870	192	RW	Word	Y	-58.0...302	°C/°F
V7-FH3	Frame heater minimum percentage/duty-cycle	V7	36837	0	38870	768	RW	Word	-	0...100	%
V7-FH4	Frame heater maximum percentage/day duty-cycle	V7	36838	0	38870	3072	RW	Word	-	0...100	%
V7-FH5	Frame heater maximum percentage/night duty-cycle	V7	36839	0	38870	12288	RW	Word	-	0...100	%
V7-FH6	Frame heater percentage/duty-cycle in defrost	V7	36840	0	38870	49152	RW	Word	-	0...100	%
V7-LOC	Disable terminal	V7	36843	0	38871	3	RW	Word	-	0...1	flag
V7-PS1	Password 1 value	V7	36844	0	38871	12	RW	Word	-	0...250	num
V7-PS2	Password 2 value	V7	36845	0	38871	48	RW	Word	-	0...250	num
V7-ndt	Display with decimal point	V7	36846	0	38871	192	RW	Word	-	0...1	flag
V7-CA1	Analog input 1 calibration	V7	36652	0	38871	768	RW	Word	Y	-30.0...30.0	°C/°F
V7-CA2	Analog input 2 calibration	V7	36653	0	38871	3072	RW	Word	Y	-30.0...30.0	°C/°F
V7-CA3	Analog input 3 calibration	V7	36654	0	38871	12288	RW	Word	Y	-30.0...30.0	°C/°F
V7-CA4	Analog input 4 calibration	V7	36655	0	38871	49152	RW	Word	Y	-30.0...30.0	°C/°F

Label	Description	Folder	Val. Par. Address	Val. Filter	Vis. Par. Address	Vis. Filter	R/W	Data Size	CPL	Range	MU
V7-CA5	Analog input 5 calibration	V7	36656	0	38872	3	RW	Word	Y	-30.0...30.0	°C/°F
V7-CA6	Analog input 6 calibration	V7	36657	0	38872	12	RW	Word	Y	-30.0...30.0	bar/psi
V7-CA7	Analog input 7 calibration	V7	36658	0	38872	48	RW	Word	Y	-30.0...30.0	bar/psi
V7-LdL	Minimum display value	V7	36847	0	38872	192	RW	Word	Y	-58.0...V7-HdL	°C/°F
V7-HdL	Maximum display value	V7	36848	0	38872	768	RW	Word	Y	V7-LdL...302	°C/°F
V7-ddL	Display lock mode during a defrost	V7	36849	0	38872	3072	RW	Word	-	0...2	num
V7-Ldd	Display lock timeout from end of defrost	V7	36850	0	38872	12288	RW	Word	-	0...250	min
V7-dro	Select °C / °F	V7	36851	0	38872	49152	RW	Word	-	0...1	flag
V7-SbP	Pressure unit of measure	V7	36852	0	38873	3	RW	Word	-	0...1	flag
V7-ddd	Select main display value	V7	36853	0	38873	12	RW	Word	-	0...8	num
V7-ddE	Resource displayed on ECHO	V7	36854	0	38873	48	RW	Word	-	0...11	num
V7-rPH	Receiver maximum valve opening %	V7	36805	0	38873	192	RW	Word	-	0...5	num
V7-H00	Select analog input type NTC/PTC	V7	36620	0	38873	768	RW	Word	-	0...2	num
V7-H02	Function activation time from terminal	V7	36855	0	38873	3072	RW	Word	-	0...250	s
V7-H08	Stand-by operating mode	V7	36857	0	38873	12288	RW	Word	-	0...2	num
V7-H11	Digital input 1 configurability and polarity	V7	36623	0	38873	49152	RW	Word	Y	-19...19	num
V7-H12	Digital input 2 configurability and polarity	V7	36624	0	38874	3	RW	Word	Y	-19...19	num
V7-H13	Digital input 3 configurability and polarity	V7	36625	0	38874	12	RW	Word	Y	-19...19	num
V7-H14	Digital input 4 configurability and polarity	V7	36626	0	38874	48	RW	Word	Y	-19...19	num
V7-H15	Digital input 5 configurability and polarity	V7	36627	0	38874	192	RW	Word	Y	-19...19	num
V7-H16	Digital input 6 configurability and polarity	V7	36628	0	38874	768	RW	Word	Y	-19...19	num
V7-H17	Digital input 7 configurability and polarity	V7	36629	0	38874	3072	RW	Word	Y	-19...19	num
V7-H18	Digital input 8 configurability and polarity	V7	36630	0	38874	12288	RW	Word	Y	-19...19	num
V7-i01	Digital input 9 configurability and polarity	V7	36890	0	38885	192	RW	Word	Y	-19...19	num
V7-i02	Digital input 10 configurability and polarity	V7	36891	0	38885	768	RW	Word	Y	-19...19	num
V7-dti	Digital inputs 1 and 2 delay unit of measure	V7	36639	0	38874	49152	RW	Word	-	0...1	flag

Label	Description	Folder	Val. Par. Address	Val. Filter	Vis. Par. Address	Vis. Filter	R/W	Data Size	CPL	Range	MU
V7-d11	D.I. 1 activation indication delay time	V7	36631	0	38875	3	RW	Word	-	0...255	min
V7-d12	D.I. 2 activation indication delay time	V7	36632	0	38875	12	RW	Word	-	0...255	min
V7-d13	D.I. 3 activation indication delay time	V7	36633	0	38875	48	RW	Word	-	0...255	min
V7-d14	D.I. 4 activation indication delay time	V7	36634	0	38875	192	RW	Word	-	0...255	min
V7-d15	D.I. 5 activation indication delay time	V7	36635	0	38875	768	RW	Word	-	0...255	min
V7-d16	D.I. 6 activation indication delay time	V7	36636	0	38875	3072	RW	Word	-	0...255	min
V7-d17	D.I. 7 activation indication delay time	V7	36637	0	38875	12288	RW	Word	-	0...255	min
V7-d18	D.I. 8 activation indication delay time	V7	36638	0	38875	49152	RW	Word	-	0...255	min
V7-01i	D.I. 9 activation indication delay time	V7	36892	0	38885	3072	RW	Word	-	0...255	min
V7-02i	D.I. 10 activation indication delay time	V7	36893	0	38885	12288	RW	Word	-	0...255	min
V7-H21	Configurability of digital output 1	V7	36660	0	38876	3	RW	Word	-	0...19	num
V7-H22	Configurability of digital output 2	V7	36661	0	38876	12	RW	Word	-	0...19	num
V7-H23	Configurability of digital output 3	V7	36662	0	38876	48	RW	Word	-	0...19	num
V7-H24	Configurability of digital output 4	V7	36663	0	38876	192	RW	Word	-	0...19	num
V7-H25	Configurability of digital output 5	V7	36664	0	38876	768	RW	Word	-	0...19	num
V7-H27	Configurability of digital output 7	V7	36666	0	38876	12288	RW	Word	-	0...19	num
V7-H29	Enable buzzer	V7	36667	0	38876	49152	RW	Word	-	0...1	num
V7-d01	Configurability of digital output 8	V7	36883	0	38884	768	RW	Word	-	0...19	num
V7-d02	Configurability of digital output 9	V7	36884	0	38884	3072	RW	Word	-	0...19	num
V7-H31	Configurability of the UP key	V7	36858	0	38877	3	RW	Word	-	0...9	num
V7-H32	Configurability of the DOWN key	V7	36859	0	38877	12	RW	Word	-	0...9	num
V7-H33	Configurability of the ESC key	V7	36860	0	38877	48	RW	Word	-	0...9	num
V7-H34	Configurability of the Free 1 key	V7	36861	0	38877	192	RW	Word	-	0...9	num
V7-H35	Configurability of the Free 2 key	V7	36862	0	38877	768	RW	Word	-	0...9	num
V7-H36	Configurability of the Free 3 key	V7	36863	0	38877	3072	RW	Word	-	0...9	num
V7-H37	Configurability of the Free 4 key	V7	36864	0	38877	12288	RW	Word	-	0...9	num
V7-H41	Configurability of analog input 1	V7	36640	0	38877	49152	RW	Word	-	0...2	num
V7-H42	Configurability of analog input 2	V7	36641	0	38878	3	RW	Word	-	0...2	num
V7-H43	Configurability of analog input 3	V7	36642	0	38878	12	RW	Word	-	0...2	num
V7-H44	Configurability of analog input 4	V7	36643	0	38878	48	RW	Word	-	0...2	num

Label	Description	Folder	Val. Par. Address	Val. Filter	Vis. Par. Address	Vis. Filter	R/W	Data Size	CPL	Range	MU
V7-H45	Configurability of analog input 5	V7	36644	0	38878	192	RW	Word	-	0...2	num
V7-H46	Configurability of analog input 6	V7	36645	0	38878	768	RW	Word	-	0...2	num
V7-H47	Configurability of analog input 7	V7	36646	0	38878	3072	RW	Word	-	0...2	num
V7-H48	Configurability of analog input 8	V7	36894	0	38885	49152	RW	Word	-	0...2	num
V7-H50	Configurability of analog output 1	V7	36668	0	38878	12288	RW	Word	-	0...1	num
V7-H51	Function associated with analog output	V7	36669	0	38878	49152	RW	Word	-	0...3	num
V7-H68	RTC present	V7	36670	0	38879	3	RW	Word	-	0...1	num
V7-H70	Selection of 1st sensor for virtual probe	V7	36648	0	38879	12	RW	Word	-	0...5	num
V7-H71	Selection of 2nd sensor for virtual probe	V7	36649	0	38879	48	RW	Word	-	0...5	num
V7-H72	Day virtual probe calculation %	V7	36650	0	38879	192	RW	Word	-	0...100	%
V7-H73	Night virtual probe calculation %	V7	36651	0	38879	768	RW	Word	-	0...100	%
V7-H74	Selection of 1st sensor for filtered virtual probe	V7	36880	0	38883	49152	RW	Word	-	0...65635	num
V7-H75	Percentage in thousandths of the incoming signal for filtered virtual probe	V7	36881	0	38884	3	RW	Word	-	0...65635	num
V7-H76	Filtered virtual probe offset	V7	36882	0	38884	12	RW	Word	-	0...65635	num
V7-EtY	Selection of electronic expansion valve driver	V7	36865	0	38879	3072	RW	Word	-	0...1	flag
V7-UL	Visibility of parameter transfer function (Device -> UNICARD/MFK)	V7	-	-	38882	3	RW	Word	-	0...3	num
V7-dL	Visibility of parameter transfer function (UNICARD/MFK -> Device)	V7	-	-	38882	12	RW	Word	-	0...3	num
V7-Fr	Visibility of UNICARD/MFK formatting function	V7	-	-	38882	48	RW	Word	-	0...3	num
V7-OHP	Selection of oil temperature probe	V7	36872	0	38882	12288	RW	Word	-	0...8	num
V7-OSP	Oil heater setpoint	V7	36873	0	38882	49152	RW	Word	Y	V7-OLS...V7-OHS	°C/°F
V7-OHd	Oil heater differential	V7	36874	0	38883	3	RW	Word	-	0.1...25.0	°C/°F
V7-OHS	Maximum oil heater setpoint value that can be set	V7	36876	0	38883	48	RW	Word	Y	V7-OLS...302	°C/°F
V7-OLS	Minimum oil heater setpoint value that can be set	V7	36877	0	38883	192	RW	Word	Y	-58.0...V7-OHS	°C/°F
Application 8 parameters											
V8-rE	Regulation type	V8	37116	0	38944	3	RW	Word	-	0...6	num
V8-rP1	Thermostat regulation probe 1	V8	37117	0	38944	12	RW	Word	-	0...8	num
V8-rP2	Thermostat regulation probe 2	V8	37118	0	38944	48	RW	Word	-	0...9	num

Label	Description	Folder	Val. Par. Address	Val. Filter	Vis. Par. Address	Vis. Filter	R/W	Data Size	CPL	Range	MU
V8-SP1	Regulation setpoint 1	V8	37119	0	38944	192	RW	Word	Y	V8-LS1...V8-HS1	°C/°F
V8-dF1	Setpoint differential 1	V8	37120	0	38944	768	RW	Word	Y	-58.0...302	°C/°F
V8-SP2	Regulation setpoint 2	V8	37121	0	38944	3072	RW	Word	Y	V8-LS2...V8-HS2	°C/°F
V8-dF2	Setpoint differential 2	V8	37122	0	38944	12288	RW	Word	Y	-58.0...302	°C/°F
V8-Stt	Differential management mode	V8	37125	0	38944	49152	RW	Word	-	0...1	flag
V8-HS1	Maximum value that can be set for Setpoint 1	V8	37128	0	38945	3	RW	Word	Y	V8-LS1...V8-HdL	°C/°F
V8-LS1	Minimum value that can be set for Setpoint 1	V8	37129	0	38945	12	RW	Word	Y	V8-LdL...V8-HS1	°C/°F
V8-HS2	Maximum value that can be set for Setpoint 2	V8	37130	0	38945	48	RW	Word	Y	V8-LS2...V8-HdL	°C/°F
V8-LS2	Minimum value that can be set for Setpoint 2	V8	37131	0	38945	192	RW	Word	Y	V8-LdL...V8-HS2	°C/°F
V8-HC1	Setpoint 1 operating mode (Heating/Cooling)	V8	37126	0	38945	768	RW	Word	-	0...1	flag
V8-HC2	Setpoint 2 operating mode (Heating/Cooling)	V8	37127	0	38945	3072	RW	Word	-	0...1	flag
V8-Cit	Minimum compressor output activation time	V8	37136	0	38945	49152	RW	Word	-	0...250	min
V8-CAt	Maximum compressor output activation time	V8	37137	0	38946	3	RW	Word	-	0...250	min
V8-Ont	Compressor output ON time if regulation probe is faulty	V8	37142	0	38946	12	RW	Word	-	0...250	min
V8-OFt	Compressor output OFF time if regulation probe is faulty	V8	37143	0	38946	48	RW	Word	-	0...250	min
V8-dOn	Compressor output activation delay from call	V8	37138	0	38946	192	RW	Word	-	0...250	s
V8-dOF	Compressor output activation delay from switch-off	V8	37139	0	38946	768	RW	Word	-	0...250	min
V8-dbi	Delay between two consecutive compressor output power-ons	V8	37140	0	38946	3072	RW	Word	-	0...250	min
V8-OdO	Output activation delay at startup	V8	37141	0	38946	12288	RW	Word	-	0...250	min
V8-CFP	Condenser pre-ventilation time in Heat/Cool	V8	37225	0	38947	12	RW	Word	-	0...255	s
V8-CFd	Condenser fan cut-out during defrosting.	V8	37226	0	38947	48	RW	Word	-	0...1	flag
V8-OF1	Remote offset	V8	37147	0	38947	192	RW	Word	Y	-50.0...50.0	°C/°F
V8-Pot	Pump down time	V8	37253	0	38978	192	RW	Word	-	0...250	s
V8-SS1	Compressor softstart: advance hotgas valve opening	V8	37254	0	38978	768	RW	Word	-	0...250	s
V8-SS2	Compressor softstart: delay hotgas valve closing	V8	37255	0	38978	3072	RW	Word	-	0...250	s

Label	Description	Folder	Val. Par. Address	Val. Filter	Vis. Par. Address	Vis. Filter	R/W	Data Size	CPL	Range	MU
V8-dP1	Select defrost probe 1	V8	37148	0	38947	768	RW	Word	-	0...8	num
V8-dP2	Defrost probe 2 selection	V8	37149	0	38947	3072	RW	Word	-	0...8	num
V8-dty	Type of defrost	V8	37152	0	38947	12288	RW	Word	-	0...4	num
V8-dFt	Dual evaporator defrost activation mode	V8	37150	0	38947	49152	RW	Word	-	0...2	num
V8-dit	Interval between defrosts	V8	37153	0	38948	3	RW	Word	-	0...250	hours
V8-dt1	Unit of measure for defrost intervals	V8	37156	0	38948	12	RW	Word	-	0...2	num
V8-dt2	Unit of measure for defrost duration	V8	37157	0	38948	48	RW	Word	-	0...2	num
V8-dCt	Defrost interval count mode	V8	37151	0	38948	192	RW	Word	-	0...5	num
V8-dOH	Defrost cycle activation delay from the call	V8	37158	0	38948	768	RW	Word	-	0...250	min
V8-dE1	Evaporator 1 defrost maximum duration	V8	37154	0	38948	3072	RW	Word	-	1...250	min
V8-dE2	Evaporator 2 defrost maximum duration	V8	37155	0	38948	12288	RW	Word	-	1...250	min
V8-dS1	Evaporator 1 defrost end temperature	V8	37160	0	38948	49152	RW	Word	Y	-58.0...302	°C/°F
V8-dS2	Evaporator 2 defrost end temperature	V8	37161	0	38949	3	RW	Word	Y	-58.0...302	°C/°F
V8-dSS	Temperature threshold for starting defrost	V8	37159	0	38949	12	RW	Word	Y	-58.0...302	°C/°F
V8-dPO	Defrost activation request at power-on	V8	37162	0	38949	48	RW	Word	-	0...1	flag
V8-tcd	Compressor output activation/deactivation time before a defrost	V8	37163	0	38949	192	RW	Word	Y	-60...60	min
V8-ndE	minimum defrost duration time	V8	37164	0	38949	768	RW	Word	-	0...250	min
V8-PdC	Hot gas extraction time at the end of the defrost	V8	37165	0	38949	3072	RW	Word	-	0...250	min
V8-tPd	Pump down time before defrost start	V8	37167	0	38949	12288	RW	Word	-	0...255	min
V8-dPH	Regular defrost start hour	V8	37106	0	38949	49152	RW	Word	-	0...24	hours
V8-dPn	Regular defrost start minutes	V8	37107	0	38950	3	RW	Word	-	0...59	min
V8-dPd	Regular defrost interval duration	V8	37108	0	38950	12	RW	Word	-	1...7	day
V8-Fd1	1st weekend/holiday day	V8	37055	0	38950	48	RW	Word	-	0...7	num
V8-Fd2	2nd weekend/holiday day	V8	37056	0	38950	192	RW	Word	-	0...7	num
V8-Edt	Timeout and defrost end temperature specific to each event	V8	37057	0	38950	768	RW	Word	-	0...1	flag
V8-Fdn	Weekday defrost number	V8	37005	0	38984	3	RW	Word	-	0...255	num
V8-FFn	Weekend/holiday defrost number	V8	37006	0	38984	12	RW	Word	-	0...250	num
V8-PrH	Basin heater pre-activation time	V8	37262	0	38979	3072	RW	Word	-	0...250	min
V8-d1H	Weekday defrost no. 1 start hour	V8	37058	0	38950	3072	RW	Word	-	0...24	hours

Label	Description	Folder	Val. Par. Address	Val. Filter	Vis. Par. Address	Vis. Filter	R/W	Data Size	CPL	Range	MU
V8-d1n	Weekday defrost no. 1 start minute	V8	37059	0	38950	12288	RW	Word	-	0...59	min
V8-d1t	1st weekday defrost duration	V8	37060	0	38950	49152	RW	Word	-	0...250	min
V8-d1S	1st weekday defrost end temperature	V8	37061	0	38951	3	RW	Word	Y	-58.0...302	°C/°F
V8-d2H	Weekday defrost no. 2 start hour	V8	37062	0	38951	12	RW	Word	-	V8-d1H...24	hours
V8-d2n	Weekday defrost no. 2 start minutes	V8	37063	0	38951	48	RW	Word	-	0...59	min
V8-d2t	2nd weekday defrost duration	V8	37064	0	38951	192	RW	Word	-	0...250	min
V8-d2S	2nd weekday defrost end temperature	V8	37065	0	38951	768	RW	Word	Y	-58.0...302	°C/°F
V8-d3H	Weekday defrost no. 3 start hour	V8	37066	0	38951	3072	RW	Word	-	V8-d2H...24	hours
V8-d3n	Weekday defrost no. 3 start minutes	V8	37067	0	38951	12288	RW	Word	-	0...59	min
V8-d3t	3rd weekday defrost duration	V8	37068	0	38951	49152	RW	Word	-	0...250	min
V8-d3S	3rd weekday defrost end temperature	V8	37069	0	38952	3	RW	Word	Y	-58.0...302	°C/°F
V8-d4H	Weekday defrost no. 4 start hour	V8	37070	0	38952	12	RW	Word	-	V8-d3H...24	hours
V8-d4n	Weekday defrost no. 4 start minutes	V8	37071	0	38952	48	RW	Word	-	0...59	min
V8-d4t	4th weekday defrost duration	V8	37072	0	38952	192	RW	Word	-	0...250	min
V8-d4S	4th weekday defrost end temperature	V8	37073	0	38952	768	RW	Word	Y	-58.0...302	°C/°F
V8-d5H	Weekday defrost no. 5 start hour	V8	37074	0	38952	3072	RW	Word	-	V8-d4H...24	hours
V8-d5n	Weekday defrost no. 5 start minutes	V8	37075	0	38952	12288	RW	Word	-	0...59	min
V8-d5t	5th weekday defrost duration	V8	37076	0	38952	49152	RW	Word	-	0...250	min
V8-d5S	5th weekday defrost end temperature	V8	37077	0	38953	3	RW	Word	Y	-58.0...302	°C/°F
V8-d6H	Weekday defrost no. 6 start hour	V8	37078	0	38953	12	RW	Word	-	V8-d5H...24	hours
V8-d6n	Weekday defrost no. 6 start minutes	V8	37079	0	38953	48	RW	Word	-	0...59	min
V8-d6t	6th weekday defrost duration	V8	37080	0	38953	192	RW	Word	-	0...250	min
V8-d6S	6th weekday defrost end temperature	V8	37081	0	38953	768	RW	Word	Y	-58.0...302	°C/°F
V8-F1H	Weekend/holiday defrost no. 1 start hour	V8	37082	0	38953	3072	RW	Word	-	0...24	hours
V8-F1n	Weekend/holiday defrost no. 1 start minute	V8	37083	0	38953	12288	RW	Word	-	0...59	min
V8-F1t	1st weekend/holiday defrost duration	V8	37084	0	38953	49152	RW	Word	-	0...250	min
V8-F1S	1st weekend/holiday defrost end temperature	V8	37085	0	38954	3	RW	Word	Y	-58.0...302	°C/°F
V8-F2H	Weekend/holiday defrost no. 2 start hour	V8	37086	0	38954	12	RW	Word	-	V8-F1H...24	hours
V8-F2n	Weekend/holiday defrost no. 2 start minutes	V8	37087	0	38954	48	RW	Word	-	0...59	min

Label	Description	Folder	Val. Par. Address	Val. Filter	Vis. Par. Address	Vis. Filter	R/W	Data Size	CPL	Range	MU
V8-F2t	2nd weekend/holiday defrost duration	V8	37088	0	38954	192	RW	Word	-	0...250	min
V8-F2S	2nd weekend/holiday defrost end temperature	V8	37089	0	38954	768	RW	Word	Y	-58.0...302	°C/°F
V8-F3H	Weekend/holiday defrost no. 3 start hour	V8	37090	0	38954	3072	RW	Word	-	V8-F2H...24	hours
V8-F3n	Weekend/holiday defrost no. 3 start minutes	V8	37091	0	38954	12288	RW	Word	-	0...59	min
V8-F3t	3rd weekend/holiday defrost duration	V8	37092	0	38954	49152	RW	Word	-	0...250	min
V8-F3S	3rd weekend/holiday defrost end temperature	V8	37093	0	38955	3	RW	Word	Y	-58.0...302	°C/°F
V8-F4H	Weekend/holiday defrost no. 4 start hour	V8	37094	0	38955	12	RW	Word	-	V8-F3H...24	hours
V8-F4n	Weekend/holiday defrost no. 4 start minutes	V8	37095	0	38955	48	RW	Word	-	0...59	min
V8-F4t	4th weekend/holiday defrost duration	V8	37096	0	38955	192	RW	Word	-	0...250	min
V8-F4S	4th weekend/holiday defrost end temperature	V8	37097	0	38955	768	RW	Word	Y	-58.0...302	°C/°F
V8-F5H	Weekend/holiday defrost no. 5 start hour	V8	37098	0	38955	3072	RW	Word	-	V8-F4H...24	hours
V8-F5n	Weekend/holiday defrost no. 5 start minutes	V8	37099	0	38955	12288	RW	Word	-	0...59	min
V8-F5t	5th weekend/holiday defrost duration	V8	37100	0	38955	49152	RW	Word	-	0...250	min
V8-F5S	5th weekend/holiday defrost end temperature	V8	37101	0	38956	3	RW	Word	Y	-58.0...302	°C/°F
V8-F6H	Weekend/holiday defrost no. 6 start hour	V8	37102	0	38956	12	RW	Word	-	V8-F5H...24	hours
V8-F6n	Weekend/holiday defrost no. 6 start minutes	V8	37103	0	38956	48	RW	Word	-	0...59	min
V8-F6t	6th weekend/holiday defrost duration	V8	37104	0	38956	192	RW	Word	-	0...250	min
V8-F6S	6th weekend/holiday defrost end temperature	V8	37105	0	38956	768	RW	Word	Y	-58.0...302	°C/°F
V8-FP1	Selection of evaporator fan probe in normal mode	V8	37168	0	38956	3072	RW	Word	-	0...7	num
V8-FP2	Selection of evaporator fan probe in defrost	V8	37169	0	38956	12288	RW	Word	-	0...7	num
V8-FPt	FSt parameter mode (absolute or relative)	V8	37170	0	38956	49152	RW	Word	-	0...1	flag
V8-FSt	Evaporator fan disabling temperature	V8	37171	0	38957	3	RW	Word	Y	-58.0...302	°C/°F
V8-FAd	Evaporator fan trigger differential	V8	37172	0	38957	12	RW	Word	-	0.1...25.0	°C/°F
V8-Fdt	Evaporator fan activation delay time after a defrost cycle	V8	37173	0	38957	48	RW	Word	-	0...250	min
V8-dt	Dripping time	V8	37178	0	38957	192	RW	Word	-	0...250	min
V8-dFd	Evaporator fan cut-out during defrost	V8	37176	0	38957	768	RW	Word	-	0...1	flag

Label	Description	Folder	Val. Par. Address	Val. Filter	Vis. Par. Address	Vis. Filter	R/W	Data Size	CPL	Range	MU
V8-FCO	Evaporator fan status with compressor output Off	V8	37175	0	38957	3072	RW	Word	-	0...4	num
V8-Fod	Evaporator fan status with door open	V8	37177	0	38957	12288	RW	Word	-	0...1	flag
V8-FdC	Evaporator fan shutoff delay after compressor deactivation	V8	37174	0	38957	49152	RW	Word	-	0...250	min
V8-FOn	Evaporator fan On time in cyclical regulator mode	V8	37179	0	38958	3	RW	Word	-	0...250	min
V8-FOF	Evaporator fan Off time in cyclical regulator mode	V8	37180	0	38958	12	RW	Word	-	0...250	min
V8-Fnn	Evaporator fan ON time in night mode (duty cycle)	V8	37181	0	38958	48	RW	Word	-	0...250	min
V8-FnF	Evaporator fan OFF time in night mode (duty cycle)	V8	37182	0	38958	192	RW	Word	-	0...250	min
V8-FE1	Variable speed fan probe selection	V8	37281	0	38982	48	RW	Word	-	0...12	num
V8-FEt	Setpoint mode	V8	37282	0	38982	192	RW	Word	-	0...1	flag
V8-FES	Setpoint	V8	37283	0	38982	768	RW	Word	Y	-58...302	°C/°F
V8-FEd	Band	V8	37284	0	38982	3072	RW	Word	-	0.1...50.0	°C/°F
V8-FEu	Cut-off band	V8	37285	0	38982	12288	RW	Word	-	0.0...25.0	°C/°F
V8-FEC	Cut-off differential	V8	37286	0	38982	49152	RW	Word	-	0.1...25.0	°C/°F
V8-FEr	Fan shutoff delay after compressor deactivation	V8	37287	0	38983	3	RW	Word	-	0...250	min
V8-FE2	Minimum day percentage	V8	37288	0	38983	12	RW	Word	-	0...100	%
V8-FE3	Maximum day percentage with compressor on	V8	37289	0	38983	48	RW	Word	-	0...100	%
V8-FE4	Maximum day percentage with compressor off	V8	37290	0	38983	192	RW	Word	-	0...100	%
V8-FE5	Minimum night percentage	V8	37291	0	38983	768	RW	Word	-	0...100	%
V8-FE6	Maximum night percentage with compressor on	V8	37292	0	38983	3072	RW	Word	-	0...100	%
V8-FE7	Maximum night percentage with compressor off	V8	37293	0	38983	12288	RW	Word	-	0...100	%
V8-FE8	Percentage during defrost	V8	37294	0	38983	49152	RW	Word	-	0...100	%
V8-FE9	Percentage in the event of probe error	V8	37295	0	38995	12	RW	Word	-	0...100	%
V8-FEA	Maximum pick-up speed	V8	37296	0	38995	48	RW	Word	-	0...100	%
V8-FEb	Fan pick-up time	V8	37297	0	38995	192	RW	Word	-	0...250	s
V8-FEP	Fan forcing period at pick-up speed	V8	37298	0	38995	768	RW	Word	-	0...250	min
V8-rA1	Temperature alarm probe 1 selection	V8	37196	0	38958	768	RW	Word	-	0...7	num

Label	Description	Folder	Val. Par. Address	Val. Filter	Vis. Par. Address	Vis. Filter	R/W	Data Size	CPL	Range	MU
V8-rA2	Temperature alarm probe 2 selection	V8	37197	0	38958	3072	RW	Word	-	0...7	num
V8-Att	Alarm mode (absolute or relative)	V8	37198	0	38958	12288	RW	Word	-	0...1	flag
V8-AFd	Alarm activation differential	V8	37199	0	38958	49152	RW	Word	-	0.1...25.0	°C/°F
V8-HA1	Maximum alarm 1 threshold	V8	37200	0	38959	3	RW	Word	Y	V8-LA1...302	°C/°F
V8-LA1	Minimum alarm 1 threshold	V8	37201	0	38959	12	RW	Word	Y	-58.0...V8-HA1	°C/°F
V8-HA2	Maximum alarm 2 threshold	V8	37202	0	38959	48	RW	Word	Y	V8-LA2...302	°C/°F
V8-LA2	Minimum alarm 2 threshold	V8	37203	0	38959	192	RW	Word	Y	-58.0...V8-HA2	°C/°F
V8-PAO	Temperature alarm exclusion time from power-on	V8	37204	0	38959	768	RW	Word	-	0...10	hours
V8-dAO	Exclusion time for temperature alarms after a defrost cycle	V8	37206	0	38959	3072	RW	Word	-	0...250	min
V8-OAO	High and low temperature alarms exclusion time after closing the door	V8	37205	0	38959	12288	RW	Word	-	0...10	hours
V8-tdO	Door open alarm exclusion time	V8	37250	0	38959	49152	RW	Word	-	0...250	min
V8-tA1	Probe 1 High/Minimum Alarm Delay	V8	37207	0	38960	3	RW	Word	-	0...250	min
V8-tA2	Probe 2 High/Minimum Alarm Delay	V8	37208	0	38960	12	RW	Word	-	0...250	min
V8-dAt	Defrost ended due to timeout alarm signaling	V8	37166	0	38960	48	RW	Word	-	0...1	flag
V8-EAL	Regulators inhibited by external alarm	V8	37210	0	38960	192	RW	Word	-	0...2	num
V8-rA3	Sets the input used by the two thresholds alarm regulator	V8	37269	0	38980	12288	RW	Word	-	0...8	num
V8-ALL	Low alarm threshold (warning)	V8	37270	0	38980	49152	RW	Word	-	0.0...V8-ALH	num
V8-ALH	High alarm threshold (alarm)	V8	37271	0	38981	3	RW	Word	-	V8-ALL...100	num
V8-dAL	2 thresholds alarm regulator differential	V8	37272	0	38981	12	RW	Word	-	0.1...100	°C/°F
V8-AL1	Minimum persistence time above the ALL threshold due to alarm activation	V8	37273	0	38981	48	RW	Word	-	0...250	min
V8-AL2	Minimum persistence time above the ALH threshold due to alarm activation	V8	37280	0	38982	12	RW	Word	-	0...250	min
V8-tP	Enables alarm acknowledgment with any key	V8	37251	0	38960	768	RW	Word	-	0...1	flag
V8-Art	Regular watchdog alarm activation period	V8	37195	0	38960	3072	RW	Word	-	0...250	min*10
V8-ttA	Manage temperature alarms with door open.	V8	37299	0	38986	3072	RW	Word	-	0...1	flag
V8-dSd	Enable light relay from door switch	V8	37192	0	38960	12288	RW	Word	-	0...1	flag
V8-dLt	Light relay off delay from door closure	V8	37193	0	38960	49152	RW	Word	-	0...250	min

Label	Description	Folder	Val. Par. Address	Val. Filter	Vis. Par. Address	Vis. Filter	R/W	Data Size	CPL	Range	MU
V8-OFL	Enable cold room lights off via key during the delay set in parameter dLt	V8	37194	0	38961	3	RW	Word	-	0...1	flag
V8-dOd	Enable utility shutoff upon door switch activation	V8	37209	0	38961	12	RW	Word	-	0...3	num
V8-dOA	Behavior forced by digital input	V8	37211	0	38961	48	RW	Word	-	0...5	num
V8-PEA	Enable forced behavior from door switch and/or external alarm.	V8	37212	0	38961	192	RW	Word	-	0...3	num
V8-dCO	Compressor activation delay from acknowledgment	V8	37213	0	38961	768	RW	Word	-	0...250	min
V8-dFO	Fan enabling delay from acknowledgment	V8	37214	0	38961	3072	RW	Word	-	0...250	min
V8-ASb	Instrument off active light/auxiliary digital input or key	V8	37240	0	38961	12288	RW	Word	-	0...1	flag
V8-L00	Shared probe	V8	36992	0	38961	49152	RW	Word	-	0...7	num
V8-L01	Distributed viewing (refers to secondary)	V8	36993	0	38962	3	RW	Word	-	0...2	num
V8-L02	Setpoint synchronization	V8	36994	0	38962	12	RW	Word	-	0...1	flag
V8-L03	Defrost synchronization	V8	36995	0	38962	48	RW	Word	-	0...2	num
V8-L04	Inhibit resources at the end of defrost	V8	36996	0	38962	192	RW	Word	-	0...1	flag
V8-L05	Stand-by synchronization	V8	36997	0	38962	768	RW	Word	-	0...1	flag
V8-L06	Lights synchronization	V8	36998	0	38962	3072	RW	Word	-	0...1	flag
V8-L07	Reduced set synchronization	V8	36999	0	38962	12288	RW	Word	-	0...1	flag
V8-L08	AUX synchronization	V8	37000	0	38962	49152	RW	Word	-	0...1	flag
V8-L09	Shared saturation probe	V8	37001	0	38963	3	RW	Word	-	0...1	flag
V8-L10	Resource unlocking timeout during synchronized defrosts	V8	37252	0	38963	12	RW	Word	-	0...250	min
V8-L11	Number of devices connected in Link2	V8	37002	0	38980	48	RW	Word	-	0...8	num
V8-L12	Alarm relay sharing in Link2	V8	37003	0	38980	192	RW	Word	-	0...2	num
V8-L13	Link2 serial frame configuration	V8	37263	0	38979	12288	RW	Word	-	0...1	flag
V8-L14	Force cool mode	V8	37279	0	38982	3	RW	Word	-	0...1	flag
V8-L15	Shared buzzer and alarm silenced via Link2	V8	37259	0	38984	48	RW	Word	-	0...2	num
V8-dcS	Deep cooling setpoint	V8	37186	0	38963	768	RW	Word	Y	-58.0...302	°C/°F
V8-tdc	Deep cooling duration	V8	37187	0	38963	3072	RW	Word	-	0...250	min
V8-dcc	Defrost delay after deep cooling	V8	37188	0	38963	12288	RW	Word	-	0...250	min
V8-ESt	Type of action for the Energy Saving function	V8	37115	0	38963	49152	RW	Word	-	0...8	num

Label	Description	Folder	Val. Par. Address	Val. Filter	Vis. Par. Address	Vis. Filter	R/W	Data Size	CPL	Range	MU
V8-ESF	Night mode activation (Energy Saving)	V8	37183	0	38964	3	RW	Word	-	0...1	flag
V8-Cdt	Door closing time	V8	37184	0	38964	12	RW	Word	-	0...255	min*10
V8-ESo	Low consumption mode disabling timeout (door switch)	V8	37185	0	38964	48	RW	Word	-	0...10	num
V8-OS1	Offset on setpoint 1	V8	37132	0	38964	192	RW	Word	Y	-50.0...50.0	°C/°F
V8-OS2	Offset on setpoint 2	V8	37133	0	38964	768	RW	Word	Y	-50.0...50.0	°C/°F
V8-Od1	Refrigerated cabinets energy saving offset 1	V8	37134	0	38964	3072	RW	Word	Y	-50.0...50.0	°C/°F
V8-Od2	Refrigerated cabinets energy saving offset 2	V8	37135	0	38964	12288	RW	Word	Y	-50.0...50.0	°C/°F
V8-dn1	Differential during energy saving mode 1	V8	37123	0	38964	49152	RW	Word	Y	-58.0...302	°C/°F
V8-dn2	Differential during energy saving mode 2	V8	37124	0	38965	3	RW	Word	Y	-58.0...302	°C/°F
V8-EdH	Weekday energy saving start hour	V8	37109	0	38965	12	RW	Word	-	0...24	hours
V8-Edn	Weekday energy saving start minutes	V8	37110	0	38965	48	RW	Word	-	0...59	min
V8-Edd	Weekday energy saving duration	V8	37111	0	38965	192	RW	Word	-	1...72	hours
V8-EFH	Weekend/holiday energy saving start hour	V8	37112	0	38965	768	RW	Word	-	0...24	hours
V8-EFn	Weekend/holiday energy saving start minutes	V8	37113	0	38965	3072	RW	Word	-	0...59	min
V8-EFd	Weekend/holiday energy saving duration	V8	37114	0	38965	12288	RW	Word	-	1...72	hours
V8-FH	Frame heater probe selection	V8	37215	0	38965	49152	RW	Word	-	0...9	num
V8-FHt	Frame heater period	V8	37217	0	38966	3	RW	Word	-	1...250	s
V8-FH0	Frame heater set	V8	37218	0	38966	12	RW	Word	Y	-58.0...302	°C/°F
V8-FH1	Frame heater offset	V8	37219	0	38966	48	RW	Word	-	0.0...25.0	°C/°F
V8-FH2	Frame heater band	V8	37220	0	38966	192	RW	Word	Y	-58.0...302	°C/°F
V8-FH3	Frame heater minimum percentage/duty-cycle	V8	37221	0	38966	768	RW	Word	-	0...100	%
V8-FH4	Frame heater maximum percentage/day duty-cycle	V8	37222	0	38966	3072	RW	Word	-	0...100	%
V8-FH5	Frame heater maximum percentage/night duty-cycle	V8	37223	0	38966	12288	RW	Word	-	0...100	%
V8-FH6	Frame heater percentage/duty-cycle in defrost	V8	37224	0	38966	49152	RW	Word	-	0...100	%
V8-LOC	Disable terminal	V8	37227	0	38967	3	RW	Word	-	0...1	flag
V8-PS1	Password 1 value	V8	37228	0	38967	12	RW	Word	-	0...250	num

Label	Description	Folder	Val. Par. Address	Val. Filter	Vis. Par. Address	Vis. Filter	R/W	Data Size	CPL	Range	MU
V8-PS2	Password 2 value	V8	37229	0	38967	48	RW	Word	-	0...250	num
V8-ndt	Display with decimal point	V8	37230	0	38967	192	RW	Word	-	0...1	flag
V8-CA1	Analog input 1 calibration	V8	37036	0	38967	768	RW	Word	Y	-30.0...30.0	°C/°F
V8-CA2	Analog input 2 calibration	V8	37037	0	38967	3072	RW	Word	Y	-30.0...30.0	°C/°F
V8-CA3	Analog input 3 calibration	V8	37038	0	38967	12288	RW	Word	Y	-30.0...30.0	°C/°F
V8-CA4	Analog input 4 calibration	V8	37039	0	38967	49152	RW	Word	Y	-30.0...30.0	°C/°F
V8-CA5	Analog input 5 calibration	V8	37040	0	38968	3	RW	Word	Y	-30.0...30.0	°C/°F
V8-CA6	Analog input 6 calibration	V8	37041	0	38968	12	RW	Word	Y	-30.0...30.0	bar/psi
V8-CA7	Analog input 7 calibration	V8	37042	0	38968	48	RW	Word	Y	-30.0...30.0	bar/psi
V8-LdL	Minimum display value	V8	37231	0	38968	192	RW	Word	Y	-58.0...V8-HdL	°C/°F
V8-HdL	Maximum display value	V8	37232	0	38968	768	RW	Word	Y	V8-LdL...302	°C/°F
V8-ddL	Display lock mode during a defrost	V8	37233	0	38968	3072	RW	Word	-	0...2	num
V8-Ldd	Display lock timeout from end of defrost	V8	37234	0	38968	12288	RW	Word	-	0...250	min
V8-dro	Select °C / °F	V8	37235	0	38968	49152	RW	Word	-	0...1	flag
V8-SbP	Pressure unit of measure	V8	37236	0	38969	3	RW	Word	-	0...1	flag
V8-ddd	Select main display value	V8	37237	0	38969	12	RW	Word	-	0...8	num
V8-ddE	Resource displayed on ECHO	V8	37238	0	38969	48	RW	Word	-	0...11	num
V8-rPH	Receiver maximum valve opening %	V8	37189	0	38969	192	RW	Word	-	0...5	num
V8-H00	Select analog input type NTC/PTC	V8	37004	0	38969	768	RW	Word	-	0...2	num
V8-H02	Function activation time from terminal	V8	37239	0	38969	3072	RW	Word	-	0...250	s
V8-H08	Stand-by operating mode	V8	37241	0	38969	12288	RW	Word	-	0...2	num
V8-H11	Digital input 1 configurability and polarity	V8	37007	0	38969	49152	RW	Word	Y	-19...19	num
V8-H12	Digital input 2 configurability and polarity	V8	37008	0	38970	3	RW	Word	Y	-19...19	num
V8-H13	Digital input 3 configurability and polarity	V8	37009	0	38970	12	RW	Word	Y	-19...19	num
V8-H14	Digital input 4 configurability and polarity	V8	37010	0	38970	48	RW	Word	Y	-19...19	num
V8-H15	Digital input 5 configurability and polarity	V8	37011	0	38970	192	RW	Word	Y	-19...19	num
V8-H16	Digital input 6 configurability and polarity	V8	37012	0	38970	768	RW	Word	Y	-19...19	num

Label	Description	Folder	Val. Par. Address	Val. Filter	Vis. Par. Address	Vis. Filter	R/W	Data Size	CPL	Range	MU
V8-H17	Digital input 7 configurability and polarity	V8	37013	0	38970	3072	RW	Word	Y	-19...19	num
V8-H18	Digital input 8 configurability and polarity	V8	37014	0	38970	12288	RW	Word	Y	-19...19	num
V8-i01	Digital input 9 configurability and polarity	V8	37274	0	38981	192	RW	Word	Y	-19...19	num
V8-i02	Digital input 10 configurability and polarity	V8	37275	0	38981	768	RW	Word	Y	-19...19	num
V8-dti	Digital inputs 1 and 2 delay unit of measure	V8	37023	0	38970	49152	RW	Word	-	0...1	flag
V8-d11	D.I. 1 activation indication delay time	V8	37015	0	38971	3	RW	Word	-	0...255	min
V8-d12	D.I. 2 activation indication delay time	V8	37016	0	38971	12	RW	Word	-	0...255	min
V8-d13	D.I. 3 activation indication delay time	V8	37017	0	38971	48	RW	Word	-	0...255	min
V8-d14	D.I. 4 activation indication delay time	V8	37018	0	38971	192	RW	Word	-	0...255	min
V8-d15	D.I. 5 activation indication delay time	V8	37019	0	38971	768	RW	Word	-	0...255	min
V8-d16	D.I. 6 activation indication delay time	V8	37020	0	38971	3072	RW	Word	-	0...255	min
V8-d17	D.I. 7 activation indication delay time	V8	37021	0	38971	12288	RW	Word	-	0...255	min
V8-d18	D.I. 8 activation indication delay time	V8	37022	0	38971	49152	RW	Word	-	0...255	min
V8-01i	D.I. 9 activation indication delay time	V8	37276	0	38981	3072	RW	Word	-	0...255	min
V8-02i	D.I. 10 activation indication delay time	V8	37277	0	38981	12288	RW	Word	-	0...255	min
V8-H21	Configurability of digital output 1	V8	37044	0	38972	3	RW	Word	-	0...19	num
V8-H22	Configurability of digital output 2	V8	37045	0	38972	12	RW	Word	-	0...19	num
V8-H23	Configurability of digital output 3	V8	37046	0	38972	48	RW	Word	-	0...19	num
V8-H24	Configurability of digital output 4	V8	37047	0	38972	192	RW	Word	-	0...19	num
V8-H25	Configurability of digital output 5	V8	37048	0	38972	768	RW	Word	-	0...19	num
V8-H27	Configurability of digital output 7	V8	37050	0	38972	12288	RW	Word	-	0...19	num
V8-H29	Enable buzzer	V8	37051	0	38972	49152	RW	Word	-	0...1	num
V8-d01	Configurability of digital output 8	V8	37267	0	38980	768	RW	Word	-	0...19	num
V8-d02	Configurability of digital output 9	V8	37268	0	38980	3072	RW	Word	-	0...19	num
V8-H31	Configurability of the UP key	V8	37242	0	38973	3	RW	Word	-	0...9	num
V8-H32	Configurability of the DOWN key	V8	37243	0	38973	12	RW	Word	-	0...9	num
V8-H33	Configurability of the ESC key	V8	37244	0	38973	48	RW	Word	-	0...9	num
V8-H34	Configurability of the Free 1 key	V8	37245	0	38973	192	RW	Word	-	0...9	num

Label	Description	Folder	Val. Par. Address	Val. Filter	Vis. Par. Address	Vis. Filter	R/W	Data Size	CPL	Range	MU
V8-H35	Configurability of the Free 2 key	V8	37246	0	38973	768	RW	Word	-	0...9	num
V8-H36	Configurability of the Free 3 key	V8	37247	0	38973	3072	RW	Word	-	0...9	num
V8-H37	Configurability of the Free 4 key	V8	37248	0	38973	12288	RW	Word	-	0...9	num
V8-H41	Configurability of analog input 1	V8	37024	0	38973	49152	RW	Word	-	0...2	num
V8-H42	Configurability of analog input 2	V8	37025	0	38974	3	RW	Word	-	0...2	num
V8-H43	Configurability of analog input 3	V8	37026	0	38974	12	RW	Word	-	0...2	num
V8-H44	Configurability of analog input 4	V8	37027	0	38974	48	RW	Word	-	0...2	num
V8-H45	Configurability of analog input 5	V8	37028	0	38974	192	RW	Word	-	0...2	num
V8-H46	Configurability of analog input 6	V8	37029	0	38974	768	RW	Word	-	0...2	num
V8-H47	Configurability of analog input 7	V8	37030	0	38974	3072	RW	Word	-	0...2	num
V8-H48	Configurability of analog input 8	V8	37278	0	38981	49152	RW	Word	-	0...2	num
V8-H50	Configurability of analog output 1	V8	37052	0	38974	12288	RW	Word	-	0...1	num
V8-H51	Function associated with analog output	V8	37053	0	38974	49152	RW	Word	-	0...3	num
V8-H68	RTC present	V8	37054	0	38975	3	RW	Word	-	0...1	num
V8-H70	Selection of 1st sensor for virtual probe	V8	37032	0	38975	12	RW	Word	-	0...5	num
V8-H71	Selection of 2nd sensor for virtual probe	V8	37033	0	38975	48	RW	Word	-	0...5	num
V8-H72	Day virtual probe calculation %	V8	37034	0	38975	192	RW	Word	-	0...100	%
V8-H73	Night virtual probe calculation %	V8	37035	0	38975	768	RW	Word	-	0...100	%
V8-H74	Selection of 1st sensor for filtered virtual probe	V8	37264	0	38979	49152	RW	Word	-	0...65635	num
V8-H75	Percentage in thousandths of the incoming signal for filtered virtual probe	V8	37265	0	38980	3	RW	Word	-	0...65635	num
V8-H76	Filtered virtual probe offset	V8	37266	0	38980	12	RW	Word	-	0...65635	num
V8-EtY	Selection of electronic expansion valve driver	V8	37249	0	38975	3072	RW	Word	-	0...1	flag
V8-UL	Visibility of parameter transfer function (Device -> UNICARD/MFK)	V8	-	-	38978	3	RW	Word	-	0...3	num
V8-dL	Visibility of parameter transfer function (UNICARD/MFK -> Device)	V8	-	-	38978	12	RW	Word	-	0...3	num
V8-Fr	Visibility of UNICARD/MFK formatting function	V8	-	-	38978	48	RW	Word	-	0...3	num
V8-OHP	Selection of oil temperature probe	V8	37256	0	38978	12288	RW	Word	-	0...8	num
V8-OSP	Oil heater setpoint	V8	37257	0	38978	49152	RW	Word	Y	V8-OLS...V8-OHS	°C/°F

Label	Description	Folder	Val. Par. Address	Val. Filter	Vis. Par. Address	Vis. Filter	R/W	Data Size	CPL	Range	MU
V8-OHd	Oil heater differential	V8	37258	0	38979	3	RW	Word	-	0.1...25.0	°C/°F
V8-OHS	Maximum oil heater setpoint value that can be set	V8	37260	0	38979	48	RW	Word	Y	V8-OLS...302	°C/°F
V8-OLS	Minimum oil heater setpoint value that can be set	V8	37261	0	38979	192	RW	Word	Y	-58.0...V8-OHS	°C/°F

Folder Visibility Table

Label	Description	Address	Filter	Data size	Range	MU
Visibility of folders for loaded application						
CP	Visibility of folder **CP** (compressor)	38175	12288	Word	0...3	num
dEF	Visibility of folder **dEF** (defrost)	38175	49152	Word	0...3	num
FAn	Visibility of folder **FAn** (fans)	38176	3	Word	0...3	num
FE	Visibility of folder **FE** (modulated fans)	38179	12	Word	0...3	num
AL	Visibility of folder **AL** (alarms)	38176	12	Word	0...3	num
Lit	Visibility of folder **Lit** (lights and digital inputs)	38176	48	Word	0...3	num
Lin	Visibility of folder **Lin** (Link2)	38176	192	Word	0...3	num
dEC	Visibility of folder **dEC** (deep Cooling Cycle)	38176	12288	Word	0...3	num
EnS	Visibility of folder **EnS** (energy saving)	38176	49152	Word	0...3	num
FrH	Visibility of folder **FrH** (frame heaters)	38177	3	Word	0...3	num
Add	Visibility of folder **Add** (communication)	38177	12	Word	0...3	num
diS	Visibility of folder **diS** (display)	38177	48	Word	0...3	num
HCP	Visibility of folder **HCP** (HACCP)	38177	192	Word	0...3	num
CnF	Visibility of folder **CnF** (configuration)	38177	768	Word	0...3	num
EE0	Visibility of folder **EE0** (Electronic Expansion Valve)	38177	3072	Word	0...3	num
FPr	Visibility of folder **FPr** (CopyCard)	38177	12288	Word	0...3	num
FnC	Visibility of folder **FnC** (functions)	38177	49152	Word	0...3	num
OiL	Visibility of folder **OiL** (Compressor oil heater)	38179	768	Word	0...3	num
Visibility of folders for AP1 application						
V1-CP	Visibility of folder **CP** (compressor)	38303	12288	Word	0...3	num
V1-dEF	Visibility of folder **dEF** (defrost)	38303	49152	Word	0...3	num
V1-FAn	Visibility of folder **FAn** (fans)	38304	3	Word	0...3	num
V1-FE	Visibility of folder **FE** (modulated fans)	38307	12	Word	0...3	num
V1-AL	Visibility of folder **AL** (alarms)	38304	12	Word	0...3	num
V1-Lit	Visibility of folder **Lit** (lights and digital inputs)	38304	48	Word	0...3	num
V1-Lin	Visibility of folder **Lin** (Link2)	38304	192	Word	0...3	num
V1-dEC	Visibility of folder **dEC** (Deep Cooling Cycle)	38304	12288	Word	0...3	num
V1-EnS	Visibility of folder **EnS** (energy saving)	38304	49152	Word	0...3	num
V1-FrH	Visibility of folder **FrH** (frame heaters)	38305	3	Word	0...3	num
V1-Add	Visibility of folder **Add** (communication)	38305	12	Word	0...3	num
V1-diS	Visibility of folder **diS** (display)	38305	48	Word	0...3	num
V1-HCP	Visibility of folder **HCP** (HACCP)	38305	192	Word	0...3	num
V1-CnF	Visibility of folder **CnF** (configuration)	38305	768	Word	0...3	num
V1-EE0	Visibility of folder **EE0** (Electronic Expansion Valve)	38305	3072	Word	0...3	num
V1-FPr	Visibility of folder **FPr** (CopyCard)	38305	12288	Word	0...3	num
V1-FnC	Visibility of folder **FnC** (functions)	38305	49152	Word	0...3	num
V1-OiL	Visibility of folder **OiL** (Compressor oil heater)	38307	768	Word	0...3	num
Visibility of folders for AP2 application						
V2-CP	Visibility of folder **CP** (compressor)	38399	12288	Word	0...3	num
V2-dEF	Visibility of folder **dEF** (defrost)	38399	49152	Word	0...3	num
V2-FAn	Visibility of folder **FAn** (fans)	38400	3	Word	0...3	num
V2-FE	Visibility of folder **FE** (modulated fans)	38403	12	Word	0...3	num
V2-AL	Visibility of folder **AL** (alarms)	38400	12	Word	0...3	num
V2-Lit	Visibility of folder **Lit** (lights and digital inputs)	38400	48	Word	0...3	num
V2-Lin	Visibility of folder **Lin** (Link2)	38400	192	Word	0...3	num
V2-dEC	Visibility of folder **dEC** (Deep Cooling Cycle)	38400	12288	Word	0...3	num
V2-EnS	Visibility of folder **EnS** (energy saving)	38400	49152	Word	0...3	num
V2-FrH	Visibility of folder **FrH** (frame heaters)	38401	3	Word	0...3	num
V2-Add	Visibility of folder **Add** (communication)	38401	12	Word	0...3	num

Label	Description	Address	Filter	Data size	Range	MU
V2-diS	Visibility of folder **diS** (display)	38401	48	Word	0...3	num
V2-HCP	Visibility of folder **HCP** (HACCP)	38401	192	Word	0...3	num
V2-CnF	Visibility of folder **CnF** (configuration)	38401	768	Word	0...3	num
V2-EE0	Visibility of folder **EE0** (Electronic Expansion Valve)	38401	3072	Word	0...3	num
V2-FPr	Visibility of folder **FPr** (CopyCard)	38401	12288	Word	0...3	num
V2-FnC	Visibility of folder **FnC** (functions)	38401	49152	Word	0...3	num
V2-OiL	Visibility of folder **OiL** (Compressor oil heater)	38403	768	Word	0...3	num
Visibility of folders for AP3 application						
V3-CP	Visibility of folder **CP** (compressor)	38495	12288	Word	0...3	num
V3-dEF	Visibility of folder **dEF** (defrost)	38495	49152	Word	0...3	num
V3-FAn	Visibility of folder **FAn** (fans)	38496	3	Word	0...3	num
V3-FE	Visibility of folder **FE** (modulated fans)	38499	12	Word	0...3	num
V3-AL	Visibility of folder **AL** (alarms)	38496	12	Word	0...3	num
V3-Lit	Visibility of folder **Lit** (lights and digital inputs)	38496	48	Word	0...3	num
V3-Lin	Visibility of folder **Lin** (Link2)	38496	192	Word	0...3	num
V3-dEC	Visibility of folder **dEC** (Deep Cooling Cycle)	38496	12288	Word	0...3	num
V3-EnS	Visibility of folder **EnS** (energy saving)	38496	49152	Word	0...3	num
V3-FrH	Visibility of folder **FrH** (frame heaters)	38497	3	Word	0...3	num
V3-Add	Visibility of folder **Add** (communication)	38497	12	Word	0...3	num
V3-diS	Visibility of folder **diS** (display)	38497	48	Word	0...3	num
V3-HCP	Visibility of folder **HCP** (HACCP)	38497	192	Word	0...3	num
V3-CnF	Visibility of folder **CnF** (configuration)	38497	768	Word	0...3	num
V3-EE0	Visibility of folder **EE0** (Electronic Expansion Valve)	38497	3072	Word	0...3	num
V3-FPr	Visibility of folder **FPr** (CopyCard)	38497	12288	Word	0...3	num
V3-FnC	Visibility of folder **FnC** (functions)	38497	49152	Word	0...3	num
V3-OiL	Visibility of folder **OiL** (Compressor oil heater)	38499	768	Word	0...3	num
Visibility of folders for AP4 application						
V4-CP	Visibility of folder **CP** (compressor)	38591	12288	Word	0...3	num
V4-dEF	Visibility of folder **dEF** (defrost)	38591	49152	Word	0...3	num
V4-FAn	Visibility of folder **FAn** (fans)	38592	3	Word	0...3	num
V4-FE	Visibility of folder **FE** (modulated fans)	38595	12	Word	0...3	num
V4-AL	Visibility of folder **AL** (alarms)	38592	12	Word	0...3	num
V4-Lit	Visibility of folder **Lit** (lights and digital inputs)	38592	48	Word	0...3	num
V4-Lin	Visibility of folder **Lin** (Link2)	38592	192	Word	0...3	num
V4-dEC	Visibility of folder **dEC** (Deep Cooling Cycle)	38592	12288	Word	0...3	num
V4-EnS	Visibility of folder **EnS** (energy saving)	38592	49152	Word	0...3	num
V4-FrH	Visibility of folder **FrH** (frame heaters)	38593	3	Word	0...3	num
V4-Add	Visibility of folder **Add** (communication)	38593	12	Word	0...3	num
V4-diS	Visibility of folder **diS** (display)	38593	48	Word	0...3	num
V4-HCP	Visibility of folder **HCP** (HACCP)	38593	192	Word	0...3	num
V4-CnF	Visibility of folder **CnF** (configuration)	38593	768	Word	0...3	num
V4-EE0	Visibility of folder **EE0** (Electronic Expansion Valve)	38593	3072	Word	0...3	num
V4-FPr	Visibility of folder **FPr** (CopyCard)	38593	12288	Word	0...3	num
V4-FnC	Visibility of folder **FnC** (functions)	38593	49152	Word	0...3	num
V4-OiL	Visibility of folder **OiL** (Compressor oil heater)	38595	768	Word	0...3	num
Visibility of folders for AP5 application						
V5-CP	Visibility of folder **CP** (compressor)	38687	12288	Word	0...3	num
V5-dEF	Visibility of folder **dEF** (defrost)	38687	49152	Word	0...3	num
V5-FAn	Visibility of folder **FAn** (fans)	38688	3	Word	0...3	num
V5-FE	Visibility of folder **FE** (modulated fans)	38691	12	Word	0...3	num
V5-AL	Visibility of folder **AL** (alarms)	38688	12	Word	0...3	num

Label	Description	Address	Filter	Data size	Range	MU
V5-Lit	Visibility of folder **Lit** (lights and digital inputs)	38688	48	Word	0...3	num
V5-Lin	Visibility of folder **Lin** (Link2)	38688	192	Word	0...3	num
V5-dEC	Visibility of folder **dEC** (Deep Cooling Cycle)	38688	12288	Word	0...3	num
V5-EnS	Visibility of folder **EnS** (energy saving)	38688	49152	Word	0...3	num
V5-FrH	Visibility of folder **FrH** (frame heaters)	38689	3	Word	0...3	num
V5-Add	Visibility of folder **Add** (communication)	38689	12	Word	0...3	num
V5-diS	Visibility of folder **diS** (display)	38689	48	Word	0...3	num
V5-HCP	Visibility of folder **HCP** (HACCP)	38689	192	Word	0...3	num
V5-CnF	Visibility of folder **CnF** (configuration)	38689	768	Word	0...3	num
V5-EE0	Visibility of folder **EE0** (Electronic Expansion Valve)	38689	3072	Word	0...3	num
V5-FPr	Visibility of folder **FPr** (CopyCard)	38689	12288	Word	0...3	num
V5-FnC	Visibility of folder **FnC** (functions)	38689	49152	Word	0...3	num
V5-OiL	Visibility of folder **OiL** (Compressor oil heater)	38691	768	Word	0...3	num
Visibility of folders for AP6 application						
V6-CP	Visibility of folder **CP** (compressor)	38783	12288	Word	0...3	num
V6-dEF	Visibility of folder **dEF** (defrost)	38783	49152	Word	0...3	num
V6-FAn	Visibility of folder **FAn** (fans)	38784	3	Word	0...3	num
V6-FE	Visibility of folder **FE** (modulated fans)	38787	12	Word	0...3	num
V6-AL	Visibility of folder **AL** (alarms)	38784	12	Word	0...3	num
V6-Lit	Visibility of folder **Lit** (lights and digital inputs)	38784	48	Word	0...3	num
V6-Lin	Visibility of folder **Lin** (Link2)	38784	192	Word	0...3	num
V6-dEC	Visibility of folder **dEC** (Deep Cooling Cycle)	38784	12288	Word	0...3	num
V6-EnS	Visibility of folder **EnS** (energy saving)	38784	49152	Word	0...3	num
V6-FrH	Visibility of folder **FrH** (frame heaters)	38785	3	Word	0...3	num
V6-Add	Visibility of folder **Add** (communication)	38785	12	Word	0...3	num
V6-diS	Visibility of folder **diS** (display)	38785	48	Word	0...3	num
V6-HCP	Visibility of folder **HCP** (HACCP)	38785	192	Word	0...3	num
V6-CnF	Visibility of folder **CnF** (configuration)	38785	768	Word	0...3	num
V6-EE0	Visibility of folder **EE0** (Electronic Expansion Valve)	38785	3072	Word	0...3	num
V6-FPr	Visibility of folder **FPr** (CopyCard)	38785	12288	Word	0...3	num
V6-FnC	Visibility of folder **FnC** (functions)	38785	49152	Word	0...3	num
V6-OiL	Visibility of folder **OiL** (Compressor oil heater)	38787	768	Word	0...3	num
Visibility of folders for AP7 application						
V7-CP	Visibility of folder **CP** (compressor)	38879	12288	Word	0...3	num
V7-dEF	Visibility of folder **dEF** (defrost)	38879	49152	Word	0...3	num
V7-FAn	Visibility of folder **FAn** (fans)	38880	3	Word	0...3	num
V7-FE	Visibility of folder **FE** (modulated fans)	38883	12	Word	0...3	num
V7-AL	Visibility of folder **AL** (alarms)	38880	12	Word	0...3	num
V7-Lit	Visibility of folder **Lit** (lights and digital inputs)	38880	48	Word	0...3	num
V7-Lin	Visibility of folder **Lin** (Link2)	38880	192	Word	0...3	num
V7-dEC	Visibility of folder **dEC** (Deep Cooling Cycle)	38880	12288	Word	0...3	num
V7-EnS	Visibility of folder **EnS** (energy saving)	38880	49152	Word	0...3	num
V7-FrH	Visibility of folder **FrH** (frame heaters)	38881	3	Word	0...3	num
V7-Add	Visibility of folder **Add** (communication)	38881	12	Word	0...3	num
V7-diS	Visibility of folder **diS** (display)	38881	48	Word	0...3	num
V7-HCP	Visibility of folder **HCP** (HACCP)	38881	192	Word	0...3	num
V7-CnF	Visibility of folder **CnF** (configuration)	38881	768	Word	0...3	num
V7-EE0	Visibility of folder **EE0** (Electronic Expansion Valve)	38881	3072	Word	0...3	num
V7-FPr	Visibility of folder **FPr** (CopyCard)	38881	12288	Word	0...3	num
V7-FnC	Visibility of folder **FnC** (functions)	38881	49152	Word	0...3	num
V7-OiL	Visibility of folder **OiL** (Compressor oil heater)	38883	768	Word	0...3	num

Label	Description	Address	Filter	Data size	Range	MU
Visibility of folders for AP8 application						
V8-CP	Visibility of folder **CP** (compressor)	38975	12288	Word	0...3	num
V8-dEF	Visibility of folder **dEF** (defrost)	38975	49152	Word	0...3	num
V8-FAn	Visibility of folder **FAn** (fans)	38976	3	Word	0...3	num
V8-FE	Visibility of folder **FE** (modulated fans)	38979	12	Word	0...3	num
V8-AL	Visibility of folder **AL** (alarms)	38976	12	Word	0...3	num
V8-Lit	Visibility of folder **Lit** (lights and digital inputs)	38976	48	Word	0...3	num
V8-Lin	Visibility of folder **Lin** (Link2)	38976	192	Word	0...3	num
V8-dEC	Visibility of folder **dEC** (Deep Cooling Cycle)	38976	12288	Word	0...3	num
V8-EnS	Visibility of folder **EnS** (energy saving)	38976	49152	Word	0...3	num
V8-FrH	Visibility of folder **FrH** (frame heaters)	38977	3	Word	0...3	num
V8-Add	Visibility of folder **Add** (communication)	38977	12	Word	0...3	num
V8-diS	Visibility of folder **diS** (display)	38977	48	Word	0...3	num
V8-HCP	Visibility of folder **HCP** (HACCP)	38977	192	Word	0...3	num
V8-CnF	Visibility of folder **CnF** (configuration)	38977	768	Word	0...3	num
V8-EE0	Visibility of folder **EE0** (Electronic Expansion Valve)	38977	3072	Word	0...3	num
V8-FPr	Visibility of folder **FPr** (CopyCard)	38977	12288	Word	0...3	num
V8-FnC	Visibility of folder **FnC** (functions)	38977	49152	Word	0...3	num
V8-OiL	Visibility of folder **OiL** (Compressor oil heater)	38979	768	Word	0...3	num

Table of Modbus Resources

Label	Description	Address	Filter	Type	Data_ Size	CPL	Range	MU
A1	Regulation probe 1	6145	0	R	Word	Y	-67.0...320	°C/°F
A2	Regulation probe 2	6146	0	R	Word	Y	-67.0...320	°C/°F
A2_PbC	Regulation probe 2	6146	0	R	Word	Y	-67.0...320	see parameter **08U**
A3	Temperature alarm probe 1	6147	0	R	Word	Y	-67.0...320	°C/°F
A4	Temperature alarm probe 2	6148	0	R	Word	Y	-67.0...320	°C/°F
A5	Defrost probe 1	6149	0	R	Word	Y	-67.0...320	°C/°F
A6	Defrost probe 2	6150	0	R	Word	Y	-67.0...320	°C/°F
A7	Evaporator fan probe	6151	0	R	Word	Y	-67.0...320	°C/°F
A8	Frame heater probe	6152	0	R	Word	Y	-67.0...320	°C/°F
A8_PbC	Frame heater probe	6152	0	R	Word	Y	-67.0...320	see parameter **08U**
A9	Valve 1 evaporator pressure	6153	0	R	Word	Y	-67.0...320	bar/psi
A9-abs_ bar	Valve 1 evaporator pressure	6153	0	R	Word	Y	-67.0...320	bar
A9-abs_ psi	Valve 1 evaporator pressure	6153	0	R	Word	Y	-67.0...320	psi
SAT_T	Saturation temperature	6174	0	R	Word	Y	-67.0...320	°C/°F
A10	Valve 1 superheat temperature	6154	0	R	Word	Y	-67.0...320	°C/°F
A11	HACCP probe	6155	0	R	Word	Y	-67.0...320	°C/°F
SP1	Regulation setpoint 1 value	6156	0	R	Word	Y	-67.0...320	°C/°F
SP2	Regulation setpoint 2 value	6157	0	R	Word	Y	-67.0...320	°C/°F
OH1	Valve 1 superheat	6158	0	R	Word	Y	-67.0...320	°C/°F
BKP_bar	Backup saturation probe 1	6180	0	R	Word	Y	-6.7...32.0	bar
BKP_psi	Backup saturation probe 1	6180	0	R	Word	Y	-67...320	psi
rDP	Remote dew point value 1	6173	0	R	Word	Y	-67.0...320	°C/°F
dis	Analog input (viewing) 1	6159	0	R	Word	Y	-67.0...320	°C/°F
vr1	Virtual probe 1	6160	0	R	Word	Y	-67.0...320	°C/°F
vr2	Virtual probe 2	6161	0	R	Word	Y	-67.0...320	°C/°F
EEV	Valve 1 opening percentage	6177	0	R	Word	N	0...100	%
FrH	Frame heater output	6176	0	R	Word	N	0...100	%
FE1	Modulated fan probe	6189	0	R	Word	Y	-67.0...320	°C/°F
FE1_mA	Modulated fan probe	6189	0	R	Word	Y	-67.0...320	°C/°F
FE1_PbC	Modulated fan probe	6189	0	R	Word	Y	-67.0...320	see parameter **08U**
FAn	Analog fan output 1	6188	0	R	Word	N	0...100	%
OIL	Temperature probe oil	6169	0	R	Word	Y	-67.0...320	°C/°F
A12	Gas concentration level	6170	0	R	Word	N	0...100	%
A12_PbC	Gas concentration level on Pb8 probe (su KDX) (if **08P** = 0)	6170	0	R	Word	N	0...100	see parameter **08U**
A12_ PbC	Gas concentration level on Pb8 probe (su KDX) (if **08P** = 1)	6170	0	R	Word	N	0...1000	see parameter **08U**
A12_ PbC	Gas concentration level on Pb8 probe (su KDX) (if **08P** = 2)	6170	0	R	Word	N	0...10000	see parameter **08U**
OLt	Superheat lower threshold	6172	0	R	Word	Y	-67.0...320	°C/°F
E1	Probe Pb1 error	6162	1	R	Word	N	0...1	flag

Label	Description	Address	Filter	Type	Data_ Size	CPL	Range	MU
E2	Probe Pb2 error	6162	2	R	Word	N	0...1	flag
E3	Probe Pb3 error	6162	4	R	Word	N	0...1	flag
E4	Probe Pb4 error	6162	8	R	Word	N	0...1	flag
E5	Probe Pb5 error	6162	16	R	Word	N	0...1	flag
E6	Probe Pb6 error	6162	32	R	Word	N	0...1	flag
E7	Probe Pb7 error	6162	64	R	Word	N	0...1	flag
AL1	Regulator 1 low alarm	6162	8192	R	Word	N	0...1	flag
AH1	Regulator 1 high alarm	6162	16384	R	Word	N	0...1	flag
AL2	Regulator 2 low alarm	6162	32768	R	Word	N	0...1	flag
AH2	Regulator 2 high alarm	6163	1	R	Word	N	0...1	flag
OPd	Door open alarm	6163	2	R	Word	N	0...1	flag
EA	External alarm	6163	4	R	Word	N	0...1	flag
Prr	Preheat input regulator	6163	8	R	Word	N	0...1	flag
Ad2	Defrost end due to timeout	6163	16	R	Word	N	0...1	flag
E10	RTC battery low alarm	6163	256	R	Word	N	0...1	flag
AtS	Regular watchdog alarm	6162	512	R	Word	N	0...1	flag
HOt	Valve 1 MOP alarm	6163	512	R	Word	N	0...1	flag
tHA	Maximum valve 1 output alarm	6163	1024	R	Word	N	0...1	flag
LoP	Minimum voltage threshold exceeded	6163	2048	R	Word	N	0...1	flag
HiP	Maximum voltage threshold exceeded	6163	4096	R	Word	N	0...1	flag
ELi	Alarm Link device lost	6163	16384	R	Word	N	0...1	flag
E08	Probe Pb8 error	6164	16	R	Word	N	0...1	flag
LEL	Level 1 refrigerant alarm	6164	32	R	Word	N	0...1	flag
LEH	Level 2 refrigerant alarm	6164	64	R	Word	N	0...1	flag
PAn	Men in the room alarm (KDX only)	6164	128	R	Word	N	0...1	flag
OFF	Stand-by	6167	1	R	Word	N	0...1	flag
C1	Compressor 1	6167	2	R	Word	N	0...1	flag
C2	Compressor 2	6167	4	R	Word	N	0...1	flag
RegAUX	Auxiliary regulator status	6167	8	R	Word	N	0...1	flag
Def1	Defrost 1	6167	16	R	Word	N	0...1	flag
Def2	Defrost 2	6167	32	R	Word	N	0...1	flag
FEv	Evaporator fans	6167	64	R	Word	N	0...1	flag
FCo	Condenser fans	6167	128	R	Word	N	0...1	flag
ALM	Alarm	6167	256	R	Word	N	0...1	flag
AUX	Auxiliary relay control output	6167	512	R	Word	N	0...1	flag
Lig	Light	6167	1024	R	Word	N	0...1	flag
DP	Deep Cooling	6167	2048	R	Word	N	0...1	flag
FH	Anti-sweater heaters	6167	4096	R	Word	N	0...1	flag
SeR	Reduced set	6167	8192	R	Word	N	0...1	flag
ES	Energy saving	6167	16384	R	Word	N	0...1	flag
do	Door status	6167	32768	R	Word	N	0...1	flag
dyS	Dynamic setpoint active	6168	1	R	Word	N	0...1	flag
gDI	Digital input status for monitoring via supervision	6168	2	R	Word	N	0...1	flag
FCool	Forced cooling mode	6168	32	R	Word	N	0...1	flag
LAN	Number of devices recognized in Link2	6169	0	R	Word	N	0...255	num
nAU	Activates auxiliary output	2561	0	W	Word	N	0...1	flag
oAU	Deactivates auxiliary output	2562	0	W	Word	N	0...1	flag
nSB	Device on	2563	0	W	Word	N	0...1	flag
oSB	Device off	2564	0	W	Word	N	0...1	flag
nES	Activates energy saving function	2565	0	W	Word	N	0...1	flag

Label	Description	Address	Filter	Type	Data_ Size	CPL	Range	MU
oNS	Deactivates energy saving function	2566	0	W	Word	N	0...1	flag
nSR	Activates economy mode	2567	0	W	Word	N	0...1	flag
oSR	Deactivates economy mode	2568	0	W	Word	N	0...1	flag
nLI	Switches lights on	2569	0	W	Word	N	0...1	flag
oLI	Switches lights off	2570	0	W	Word	N	0...1	flag
nBT	Locks terminal	2571	0	W	Word	N	0...1	flag
oBT	Unlocks terminal	2572	0	W	Word	N	0...1	flag
nDM	Manual Defrost activation	2573	0	W	Word	N	0...1	flag
oPV	Valve 1 opening control	2574	0	W	Word	N	0...1	flag
nPV	Valve 1 closing control	2575	0	W	Word	N	0...1	flag
nOS	Additional setpoint offset activation	2576	0	W	Word	N	0...1	flag
oOS	Additional setpoint offset deactivation	2577	0	W	Word	N	0...1	flag
dEC	Deep Cooling regulator activation	2578	0	W	Word	N	0...1	flag
ClkUp	Updates clock	2579	0	W	Word	N	0...1	flag

Eliwell Controls srl
Via dell'Industria, 15 Z.I. Paludi
32016 Alpago (BL) Italia
Telephone +39 (0) 437 986 111
www.eliwell.com

Customer Technical Support
Telephone +39 (0) 437 986 300
E techsuppeliwell@se.com

Sales
Telephone +39 (0) 437 986 100 (Italy)
Telephone +39 (0) 437 986 200 (other countries)
E saleseliwell@se.com

RTX_V-03EN - RTX 600 /V DOMINO ZERO - EN - 11/2022
© 2022 Eliwell - All right reserved