ID 985 /S/E/CK - ID 985 /E LX

Electronic controllers for "ventilated" refrigeration units with RS485 on board (ID985 /S/E/CK) and remote display

Instruction sheet

by Schneider Electric

BUTTONS

Scrolls through the menu items
Increases values
Activates manual defrosting
(see **H31** parameter)

UP

Scrolls through the menu items
Decreases the values
Parameter programmable
(see **H32** parameter)

DOWN



Echo - Remote Display

FNC

ESC function (quit)
Parameter programmable
(see **H33** parameter)

SET

Accesses Set point and rtc folder
Accesses the Menus
Confirms the commands
Displays the alarms (if active)
Stores hours/min

USER INTERFACE

The user has a display and four buttons for controlling instrument status and programming. The device can also be connected to a remote display.
At start-up the instrument performs a Lamp Test; the display and LEDs flash for a few seconds to check that they are working correctly. The instrument has two main menus: the Machine Status menu and the Programming menu.

ACCESSING AND USING MENUS

The resources are arranged in a menu that can be accessed by pressing and quickly releasing the "set" button (Machine Status menu) or holding down the "set" button for more than 5 seconds (Programming menu). To access the contents of each folder indicated by the relevant label, just press the "set" button once.
You can now scroll through the contents of each folder, modify it or use its functions.
If you do not use the keyboard for over 15 seconds (time-out) or if you press the "fnc" button once, the last value shown on the display is confirmed and you are taken back to the previous screen mask.

REMOTE DISPLAY

This has a display with 3 digits + sign that displays the parameter programming and alarm display values on the controller it is connected to during probe reading.

MACHINE STATUS MENU

(See Machine Status Menu Diagram).
To access the Machine Status menu, press the "set" button and quickly release it.
If no alarms are present, the label "SEt" appears. By using the "UP" and "DOWN" buttons you can scroll through the other folders in the menu:
-**AL**: alarm folder (if alarms present, except for faulty probes/probe errors;
-**SEt**: Set point setting folder.
-**rtc**: Real Time Clock folder
-**Pb1**: probe 1 value folder;
-**Pb2**: probe 2 value folder;
-**Pb3**: probe 3 value folder (if present).

Set setting

Access the "Machine Status" menu, press the "set" button and quickly release it. The "Set" folder label appears. To display the Set point value, press the "set" button again.
The Set point value appears on the display. To change the Set point value, use the "UP" and "DOWN" buttons within 15 seconds. If the parameter is **LOC** = y the Set point cannot be changed.

Alarm on

If an alarm condition exists when the Machine Status menu is accessed the "AL" folder label appears (see section on "Diagnostics").

Real Time Clock

By pressing the "set" button when the "rtc" label appears, the label d00 (days) is displayed. Use the "UP" and "DOWN" buttons to set days. If you do not use the buttons for over 2 seconds or if you press "set" you switch to the hours (h00) and minutes ('00) folders: use the "UP" and "DOWN" buttons to set the hours and minutes respectively. If you do not use the keyboard for over 15 seconds (time-out) or if you press the "fnc" button once, the last value shown on the display is confirmed and you are taken back to the previous screen mask.

NOTES: Always use the "set" button to confirm the hours/minutes/days setting.
We recommend considering the first day d00 as SUNDAY.

Displaying probes
If you press the "set" button when the corresponding label appears, the value of the probe associated with it is displayed.

fnC function folder
The FnC folder (last folder visible from the Programming Menu, level 1) contains the following functions. They are activated using the "set" button.

Function	Label Function ACTIVE	Label Function NOT ACTIVE
Reduced set point	OSP	SP**
Aux	AON	AoF
Pressure switch alarm reset	rAP	rAP
**default		

If the unit is switched off, the function labels go back to their default status.

Activating manual defrost cycle
To activate the defrost cycle manually, press the "UP" button (if configured =1) for 5 seconds. If the right defrosting conditions are not present (the temperature of the evaporator probe is higher than the end of defrost temperature, for example) or parameter **OdO** different than 0, the display will flash three times to indicate that the operation will not be performed.

MACHINE STATUS MENU DIAGRAM

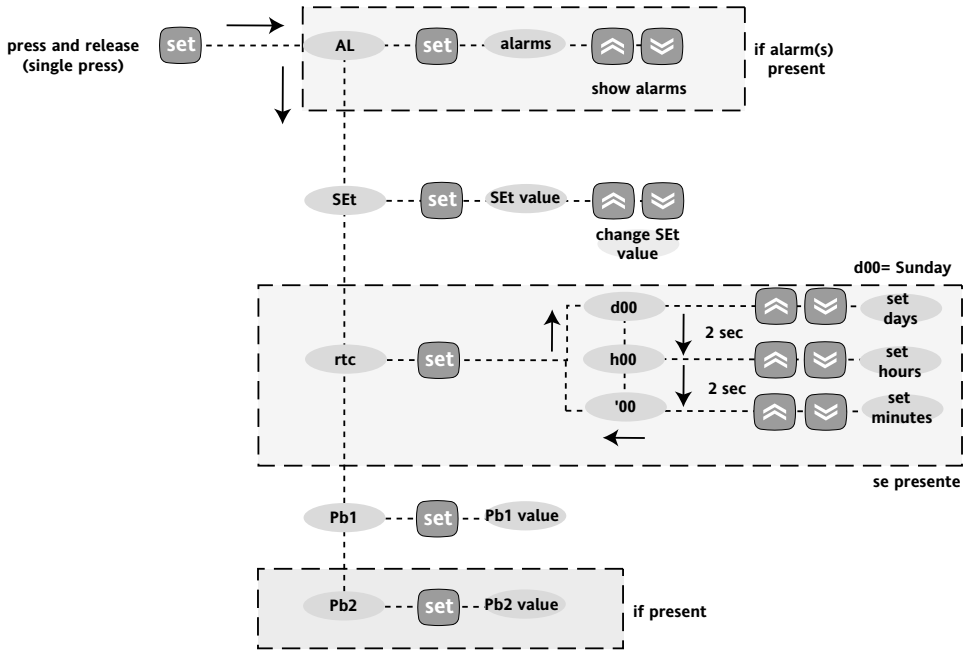

LED

Position	Associated function	Status
eco	Set point/Reduced set point	ON for parameter programming level 2 blinking when reduced set point is entered (set point ON for setting set point)
❄	Compressor or relay 1	ON for compressor on; blinking for protection delay or enabling blocked
❄	Defrosting	ON when defrosting in progress; blinking when activated manually or by digital input
(•)	Allarm	ON for active alarm; blinking for silenced alarm
	Fans	ON when fan is on
aux	Aux	ON when auxiliary output is operating

KEYBOARD LOCKING

The instrument includes a facility for disabling the keyboard:

- using the keys (pressing UP+DOWN simultaneously for 2 seconds; see KEYS AND LEDS);
- by programming the "**Loc**" parameter (see folder with "**diS**" label).

If the keyboard is locked, you can access the "Programming" Menu by pressing the "set" key.
The Setpoint can also be viewed.

PROGRAMMING MENU

The menu is divided into 2 levels once users have pressed the 'set' button for 5 seconds, they can access the user level folders (1)
Navigation at user level(1):



• By using the 'UP' / 'DOWN' buttons
you can scroll through all the folders
in the programming menu that only contain
user level parameters (1);

How to access the installer level (2):
• By using the 'UP' / 'DOWN' buttons, scroll through the
user level folders (1) until the folder with the "CnF" label is
displayed.
Then press 'set' to access the parameters contained in it;

•By using the 'UP' / 'DOWN' all the parameters
in the user level (1) in 'CnF' are displayed,
continue until the 'PA2' label is not longer
displayed and press 'set'.



•By pressing the 'set' button next to 'PA2'
the first folder containing installer
level parameters will be displayed and then the 'CP folder.

Navigation at installer level(2):
•By using the 'UP' / 'DOWN' buttons
you can scroll through all the folders
in the programming menu that only
contain installer level parameters (2).

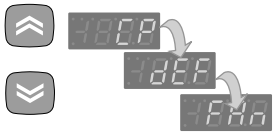

How to modify the parameter value (on both levels):
•When the 'set' button is pressed,
the first folder in the menu
is displayed. (e.g.: "CP" folder);



•By using the 'UP' / 'DOWN' buttons
you can scroll through all the folders in current level;

•By pressing the 'set' button next
to the selected folder (in this case "**H00**") the first parameter in
the current level will be displayed.
Select the desired parameter using the 'UP' / 'DOWN' keys;

•By pressing the 'set' button
the value of the selected parameter
is displayed and by using the 'UP'
and 'DOWN' buttons, it can be modified.

PASSWORD

Access to parameter handling both at user level and installer level can be limited by using passwords. The passwords can be enabled by setting the PA1 (user password) and **PA2** (installer password) in the '**dIS**' folder. The passwords are enabled if the value of the 2 parameters **PA1** and **PA2** is not 0.



- To access the "Programming" menu hold down the "set" button for more than 5 seconds.



If specified, the user level(1) access PASSWORD will be requested:

- If password 1 is enabled (not 0) you will be asked to enter it. Perform the operation by selected the correct value using the 'UP' e 'DOWN' keys and press the 'set' button to confirm.

Installer level (2) parameters



In the programming menu scroll through the folders containing the user level parameters using the UP' and 'DOWN' buttons until the CnF folder is displayed.



- Press the 'set' button to enter the 'CnF' folder where the '**PA2**' label is present;
- Croll through the folder parameters and press the 'set' button next to the '**PA2**' label, '0' will appear on the display;



- Use the 'UP' / 'DOWN' buttons to select the correct value of the installer password and then press the 'set' button to access the installer level parameters (2). If the password is not entered correctly, the device will display the '**PA2**' label again and the operation will have to be repeated.

COPY CARD

The Copy Card is an accessory connected to the TTL serial port used for quick programming of the unit parameters (upload and download parameter map to one or more units of the same type). upload (**UL** label), download (dL label) and copy card formatting (Fr label) operations are performed in the following way:



- The 'FPr' folder contains the commands necessary for use of the Copy Card. Press 'set' to access the function.



- Use the 'UP' / 'DOWN' buttons to display the required function. Press the 'set' and uploading (or downloading) will be performed.



- If the operation is successful '**y**' will be displayed, if it is not successful, '**n**' will be displayed.

Download from reset

Connect the copy card when the instrument is OFF. The programming parameters are downloaded when the device is switched on. At the end of the lamp test, the following messages are displayed for about 5 seconds:



- **dLY** label if copy operation is successful;
- **dLn** label if operation fails.

NOTE: At each level in both menus, when the "fnc" button is pressed or the 15 second time out elapses, you are taken back to the higher display level and the last value on the display is stored. After the parameters have been downloaded, the device uses the downloaded parameter map settings. See "FPr folder" in Parameter Table and Description of parameters

ADVANCED FUNCTIONS

DOOR SWITCH INPUT

This is a clean contact digital input with programmable polarity. The door switch input functions are controlled by the values of the following parameters: If activation state forcing is enabled (**dOA** is not 0), the compressor and/or fan outputs can be activated when the time set in parameters **dCO** and **dFO** expires.

Par.	Description
dOd	Digital input switches off loads
dAd	D.I. activation delay
OAO	Alarm signal delay after disabling the digital input (door closed)
tdO	Time out door open. Time out signalled when D.I is activated (door open)
dOA	Forced behaviour from digital input
PEA	Enables forced behaviour from door switch and/or external alarm
dCO	Delay in enabling compressor with consensus

Par.	Description
dFO	Delay in enabling fans with consensus
H11	Digital output configurability/polarity 1
H21...H25	Digital output configurability 1...5

Parameter **H11** is used to configure the digital input with values between -9 and +9. Positive and negative values are used to select the polarity assigned to the input and:
NOTE: the sign "**-**" indicates that the input is activated when the contact is closed The '**+**' sign indicates that the input is activated when the contact is open.

DEVICE STAND-BY CONTROLLER
This controls the operating mode of the device when it is on stand by according to the following parameters:

Par	Description
PAO	Alarm exclusion at start-up
OdO	Output delay from power-on
H08	Operating mode in stand-by.

The Stand-by controller can be digital input or button enabled if suitably configured.
The status of the instrument when on stand-by is determined by the value of parameter **H08**. Three possible operating modes are defined:
EXAMPLE 1: the display is off and the controllers active, the instrument signals any alarms by reactivating the display - OFF DISPLAY
EXAMPLE 2: the display is off and all the controllers, including the alarms, are also disabled - STAND-BY
EXAMPLE 3: the display shows the "OFF" label and all the controllers, including the alarms, are also disabled- STAND-BY

LINK
The Link function is used to connect up to 8 instruments (1 Master device and 7 slave devices). The distance between one device and another must be 7 metres (275.59 in.) maximum whereas the maximum distance between the first and last instrument in the network must be approximately 50 m (1968.50 in.).
NOTE: the serial link between the devices is powered.

Master
Instrument that controls the networks and sends commands to the Slaves. The Master is selected using parameter **L00** (the value 0 defines the Master).

Slave
Instrument(s) with own controllers that also perform(s) commands issued by the Master (with parameters **L03**..**L06**).

Echo
This only displays the values of the instrument that it is associated with (it does not therefore have its own I/O resources but only serves as a repeater).
NOTE: only one Echo can be connected to anyone instrument.

Defrosting
The Link network controls defrosting. The Master sends the defrost command which can be performed synchronously (at the same time) or sequentially (one defrost after another) without affecting the normal protections or delays for each instrument (see parameter **L03**).

Other Functions
The Master can also activate the functions associated with buttons or the Digital Input for all the Slaves: switching lights on/off, alarm silencing, auxiliary set point, auxiliary relay, stand-by (on/off) and functions related to Night & Day controller (see parameter **L05**). The Master can also synchronize the Slave (or Echo device) displays with the Master device display (see parameter **L04**).

NOTE: synchronized defrosting refers to actual defrosting and not to dripping and subsequent defrosting. The defrost LED on the Slave units blinks when synchronized defrosting has terminated and the Slaves are awaiting for the thermostat control to be enabled by the Master. The functions are associated with the instruments by correctly setting the parameters (see the parameter table for the "**Lin**" label folder).

Defrost control
The instrument can be used to select different types of defrosting with the parameter dty, defrost type. (defrost execution mode).
The dty parameter can have these values:
0 = Electrical or Off Cycle defrost (Compressor OFF during Defrost);
1 = Reverse cycle defrost (hot gas - Compressor On during Defrost);
2 = 'Free' : Independent defrost.(compressor cycles ON/OFF according to temperature during defrost).

Configuration of 3rd probe as 2nd evaporator probe
The 3a probe can be used to control the defrosting of a second evaporator by configuring a relay output as a 2nd evaporator defrost relay (see par. **H21**…**H26**). To implement this function:
a) configure the 3rd probe in 2nd evaporator defrost control mode (par. **H43**=2EP);
b) configure a relay output as 2nd evaporator defrost relay (configuration parameters **H21**…**H26**);
c) define the defrost mode by setting parameter **H45**.

Start of defrosting
If two evaporators are used, defrosting starts in three different ways that are determined by parameter **H45**.
- **H45**=0: Defrosting is enabled by controlling the temperature of the 1st evaporator so it is lower than parameter **dSt**;
- **H45**=1: Defrosting is enabled by controlling so that at least one of the two probes is below its end of defrosting temperature (**dSt** for the 1st evaporator and **dS2** for the 2nd evaporator);
- **H45**=2: Defrosting is enabled by controlling so that both the probes are below their respective end of defrosting set points (**dSt** for the 1st evaporator and **dS2** for the 2nd evaporator).

The probe error condition is considered the defrost calling probe.
When defrosting is terminated by a probe or is timed out (see par. **dEt**), dripping follows (see par. **dt**).

End of defrosting
If two evaporators are used, defrosting ends when both the probes have reached or exceeded their respective end of defrosting set points (**dSt** for the 1st evaporator and **dS2** for the 2nd evaporator)
If one or both the probes are faulty, defrosting is ended by a time-out.

NOTE:
- If there are no conditions for defrosting, the request is ignored. Defrosting of a single evaporator ends when the value read by the respective probe is equal to or higher than the end of defrosting temperature or a time-out occurs. Dripping starts when both defrosts have been completed;
- If one or both the probes are faulty, defrosting in the corresponding evaporator is ended by a time-out. The start of defrosting is permitted when the corresponding temperature is lower than the corresponding set point (**dSt** or **dS2**);
- If probe 3 is not configured as a probe on the second evaporator (**H43** ≠ 2), defrosting on the second evaporator occurs if a digital output is configured to control defrosting on the second evaporator (see par. **H21..H25**). If this is the case, defrosting is confirmed (as if **ST3**<**dS2**) and ends with a time-out. The fan controller remains unchanged.

GENERAL PRESSURE SWITCH INPUT CONTROLLER
This controller performs diagnostics on an associated digital input using a configuration table. It is activated by setting parameters **H11** and **H12** = 9. If the pressure switch input trips, the compressor loads are immediately deactivated, the alarm LED lights up to signal tripping and the label nPA in the alarm folder appears on the display.
Controlling is performed using 2 parameters PEn and **PEi**:

Par.	Description
PEn	Number of errors allowed per maximum/ minimum pressure switch input switch input (number)
PEi	Minimum/maximum pressure switch error count time (minutes)

nPA is a subfolder of AL (Alarms), and keeps a record of each time the pressure switch is activated if the value indicated by **PEn** is reached in a period of time that is less than or equal to **PEi**, the label nPA is replaced by **PA** (pressure alarm).
The alarm conditions only occurs when the maximum number of alarms is reached before the time indicated by parameter **PEi** expires. As soon as the first alarm occurs, the time **PEi** is calculated.
If the number of times the pressure switch is activated exceeds the number established **PEn** in the period **PEi**:
- compressor outputs, fans and defrosting are deactivated;
- the label PA is displayed in the subfolder nPA;
- the alarm LEDs and alarm relay if configured are switched on.

NOTE: Once the device is in alarm mode, it must be switched off and on again or reset by activating the **rAP** parameter in the functions menu. The nPA folders can be reset using the rPA function in the Fnc folder.
NOTE: If parameter **PEn** is set to 0 the function is excluded and the alarms and counts are disabled.

CONDENSER FAN CONTROLLER
This controller is associated with probe Pb3 and features:
- operating set point;
- operating differential;
- exclusion of fans in defrosting mode;
- start-up delay after end of defrosting If a digital output is set as condenser fans (**H21**...**H24** =1 0) the output will behave as shown below:

Output Value	Pb3 Value
ON	≥ SCF
OFF	≤ SCF - dCF

If probe Pb3 is not present and alarm E3 is active, the controller will always be on during the defrost cycle.
Probe 3 can be excluded and the failed connection with the instrument will not trigger an error message.
NOTE: During dripping time the output is OFF.
NOTE: If a digital output is programmed as condenser fans (**H21...H25** =10) parameter **SA3** is always an absolute value irrespective of the value of parameter **Att**.

DIAGNOSTICS

The alarm condition is always signalled by a buzzer (if present) and the alarm icon LED. The alarms from the faulty thermostat control probe (probe 1), the faulty evaporator probe (probe 2), and the faulty display probe (probe 3) appear directly on the instrument display as **E1**, **E2**, and **E3** respectively.

Table of probes in errors	
Display	**Description**
E1	Probe 1 in error (thermostat control)
E2	Probe 2 in error (1st evaporator)
E3	Probe 3 in error (display or 2nd evaporator)
If simultaneous, they will be showed on the display alternately every 2 seconds	

An error condition in probe 1 (thermostat control) causes the following:

- **E1** code appears on display;
- Compressor is activated as indicated by '**Ont**' and '**Oft**' parameters if these are programmed for duty cycle or:

Ont	Oft	Compressor output
0	0	OFF
0	>0	OFF
<0	0	ON
>0	>0	dc

The error condition for probe 2 (evaporator) causes the following:

- **E2** code appears on display;
- End of defrost due to time-out.

The error condition for probe 3 (display) causes the following:

- **E3** code appears on display Other alarms do not appear on the instrument display but can be seen in the 'Machine Status' menu in the 'AL' folder.

The maximum and minimum temperature alarm is regulated according to the thermostat control probe (probe1) and/or display probe (probe 3). The temperature limits are defined by the **HAL** (maximum alarm), **LAL** (minimum alarm) and **PbA** (alarm configuration on probe 1,3 or both) parameters.

Maximum and minimum temperature alarm

If an alarm condition occurs and alarm exclusion times are not in progress (see alarm exclusion parameters), the alarm icon lights up permanently and the relay that is configured as an alarm is activated. This type of alarm does not affect the regulating in progress. Alarms are considered as absolute (default) values or as values related to the Set point (the distance from the Set point itself) and based on the **Att** parameter. If the alarms are relative (**Att**=1), the parameter **HA1** is set to positive values and **LA1** to negative values. This alarm condition can be viewed in the folder 'AL' with labels '**AH1-AL1**'.

Alarm with threshold (probe 3)

By setting the **PbA**=3 parameter an alarm is associated to probe 3. It refers to a specific threshold (defined by the **SA3** parameter). An over-temperature or an under-temperature alarm is generated and the icon is turned on. This alarm condition can be viewed in the 'AL' folder with the labels '**AH3-AL3**'.
The alarm is handled as a temperature alarm referring to probe 3: for delays and backswings, refer to standard alarms.

Defrost alarm

If the end of defrosting is due to a time-out (rather then because an end of defrosting temperature is detected by the defrosting probe), an alarm is generated and the icon lights up. This condition can be viewed in the 'AL' folder with the label '**Ad2**'.
Automatic back swinging occurs when the next defrost starts. By pressing any button during the alarm condition, the signal light disappears. In order to cancel the alarm properly, you must wait until the next defrost.

External alarm

The device can also control an external alarm, i.e. from a digital input. If the digital input is enabled, the alarm control is activated by programming and remains enabled until the next time the digital input is deactivated. When an alarm is set off, the alarm icon lights up permanently, a buzzer (if present) and the relay configured as alarm are activated and the compressor, defrost and fan controllers are deactivated according to the value of the **rLO** parameter):
This alarm condition can be displayed in the 'AL' folder using the 'EA' label. The relay can be silenced; even if the alarm icon starts blinking, the controllers remain locked until the next time the digital input is deactivated.

Value	Description
0	No resources are disabled
1	Disables compressor and defrosting
2	Disables compressor, defrosting and fans

Open door alarm

If a door is open, the Open Door alarm is signalled in response to a delay defined by the **tdO** parameter. The alarm is signalled by the flashing alarm icon. This alarm condition can be viewed in the 'AL' folder with the label '**Opd**'.
NOTE: Do not set parameter **tAo** to zero when the door is closed since if the door is continually opened and closed, any alarms would never be signalled.

LINK alarm
In the event of a master/slave/echo communication failure, the No Link alarm is signalled. This alarm condition can be viewed on the master and slaves, if present, in the 'AL' folder with the '**E7**' label. Error status is also signalled by any connected echo devices with signal '- - -' appearing on the display.
NOTE:
- The **E7** error is signalled after approx. 20 seconds in 'no link' condition to avoid any link disturbance causing communication errors.
- The **E7** error is also signalled for addressing conflicts when:

the number of Slaves set on the MASTER is different from the actual number of Slaves on the network 2 or more Slaves have the same address.

Display	Allarm
AH1	High temperature alarm (referring to room probe or probe 1)
AL1	Low temperature alarm (referring to room probe or probe 1)
AH3	High temperature alarm (referring to probe 3)
AL3	Low temperature alarm (referring to probe 3)
Ad2	Defrosting timed out
EA	External alarm
Opd	Door Open Alarm
PA	Pressure Switch Alarm
E7	Master-Slave Communication failure
Press any button to silence the alarm. The LED will start to blink. If simultaneous, they will be showed on the display alternately every 2 seconds. *No-link alarms and addressing conflicts alternate with the temperature or probe error values normally displayed on the Master or Slave	

ELECTRICAL CONNECTIONS

Warning! Always switch off machine before working on electrical connections.
The instrument has screw terminals for connecting electrical cables with a maximum diameter of 2.5 mm^2 (13 AWG) (only one conductor per terminal for power connections): for terminal capacity, see the label on the instrument.
The relay contacts are voltage free. Do not exceed the maximum current allowed. For higher loads, use a suitable contactor.
Make sure that the power voltage complies with the device voltage. Probes have no connection polarity and can be extended using an ordinary bipolar cable (note that if probes are extended this affects the electromagnetic compatibility (EMC) of the instrument: special care must be used when wiring).
Probe cables, power supply cables and the TTL serial cable should be kept separate from power cables.

MECHANICAL ASSEMBLY

The unit has been designed for panel-mounting. Drill a 71x29 mm (2.80x1.14 in) hole, insert the keyboard and fix it in place with the special brackets provided. The remote display has also been designed for panel-mounting on a cut-out measuring 45.9 x 26.4 mm (1.81x1.04 in.). It is pressure-mounted using special brackets.
Do not install the instruments in excessively humid and/or dirty locations. They are suitable for use in locations with normal pollution levels. Always make sure that the area next to the instrument cooling slits is adequately ventilated.

COMPRESSOR CONTROLLER-CP LABEL

PAR.	DESCRIPTION	RANGE	DEFAULT	LEVEL	M.U.
SEt	Set point with range falling between the minimum **LSE** setpoint and the maximum **HSE** set point.	LSE...HSE	0.0	/	°C/°F
diF	The compressor stops when it reaches the set point value, and restarts at a value corresponding to the setpoint plus the value of the differential. It must not be 0.	0,1... 30.0	2.0	1-2	°C/°F
HSE	Maximum setpoint value.	LSE... 302	50.0	1-2	°C/°F
LSE	Minimum set point value.	-55.0...HSE	-50.0	1-2	°C/°F
OSP	Offset point. Value to be added to set point if reduced setpoint is activated (economy function).	-30.0...30.0	0	2	°C/°F
Cit	Minimum compressor ON time. Minimum time for activating a compressor before deactivation Not active if=0.	0...250	0	2	min
CAt	Maximum compressor ON time. Maximum time for activating a compressor before deactivation Not active if=0.	0...250	0	2	min
Ont	Compressor activation time if probe is faulty. If set to 1 with **OFt**=0 the compressor always remains on whereas if **Oft**>0 it operates in duty cycle mode .	0...250	0	2	min
OFt	Compressor shut-down time if probe is faulty. If set to 1 with **Ont**=0 the compressor always remains off whereas if **Oft**>0 it operates in duty cycle mode.	0...250	1	1-2	min
dOn	Delay in activating compressor relay after start-up.	0...250	0	1-2	sec
dOf	Delay after shut-down; between compressor relay shut-down and subsequent start-up the specified time must elapse.	0...250	0	1-2	min
dbI	Delay between switch-ons; the specified time must elapse between two subsequent switch-ons.	0...250	0	1-2	min
OdO	Delay in enabling outputs after start-up of instrument or after a power failure. Not active if=0.	0...250	0	1-2	min

DEFROSTING CONTROLLER-DEF LABEL

PAR.	DESCRIPTION	RANGE	DEFAULT	LEVEL	M.U.
dty	Defrost type: **0** = Electrical or Off Cycle defrost (Compressor OFF during Defrost); **1** = Reverse cycle defrost (hot gas - Compressor On during Defrost); **2** = 'Free' : Independent defrost (compressor cycles ON/OFF according to temperature during defrost).	0/1/2	0	1-2	flag
dit	Period of time elapsing between the start of two defrosts **0**=function disabled.	0...250	6	1-2	hours
dt1	Unit of measurement for defrost times (par. dit); **0**="**dit**" expressed in hours: **1**="**dit**" expressed in minutes; **2**="**dit**" expressed in seconds.	0/1/2	0	2	flag
dt2	Unit of measurement for duration of defrosting (dEt parameter) **0**= "**dEt**" parameter expressed in hours; **1**= "**dEt**" parameter expressed in minutes; **2**= "**dEt**" parameter expressed in seconds.	0/1/2	1	2	flag
dCt	Selection of defrosting time count mode. **0**= compressor operating hours DIGIFROST® method). Defrosting active only if compressor is on. **1**= equipment operating hours; defrost counting is always active when the machine is on. **2**= compressor stop Each time the compressor stops a defrosting cycle is performed according to par. dtY. **3**= with RTC. Defrosting at times set by **dE1**...**dE8**, **F1**...**F8** parameters.	0/1/2/3	1	1-2	flag
dOH	Delay between start of first defrosting operation and start-up of instrument.	0...59	0	1-2	min
dEt	Defrosting time-out; determines maximum duration of defrosting.	1...250	30	1-2	min
dSt	End of defrost temperature (determined by evaporator probe).	-50.0...150	8.0	1-2	°C/°F
dE2	Defrost time-out on 2nd evaporator.	1...250	30	1-2	min/sec
dS2	End of defrost temperature on 2nd evaporator.	-50.0...150	8.0	1-2	°C/°F
dPo	Determines when instrument starts up if the defrosting cycle must be activated (if the temperature on the evaporator allows this), **n**(0)=defrosting not activated at start-up; **y**(1)=defrosting activated at start-up.	n/y	n	1/2	flag
tcd	Minimum time for each compressor state before defrosting "Ontime if >0; "Offtime if >0.	-31...31	0	2	min
Cod	Compressor "Off" time before defrost cycle. The compressor is not turned on if a defrost cycle is expected in the time indicated by the parameter. **0**= Function excluded.	0...60	0	2	min
"dd"	**dE1**...**dE8**; daily defrost start time.	0...23/0...59	24	1	hours/ min
"Fd"	**F1**...**F8** festive defrost start time.	0...23/0...59	24	1	hours/ min

FAN CONTROLLER-FAN LABEL

PAR.	DESCRIPTION	RANGE	DEFAULT	LEVEL	M.U.
FPt	Determines if "**FSt**" and "**Fot**" are expressed as absolute values or in relation to set point. **0**= absolute value; **1**= value related to set point	0/1	0	2	flag
FSt	Fan stop temperature. Temperature limit that, if exceeded by the value read by the evaporator probe, stops the fans.	-50.0...150.0	2.0	1-2	°C/°F
Fot	Fan start temperature. If the temperature read by the evaporator probe is lower than the set value the fans remain off.	-50.0...150.0	-50.0	2	°C/°F
FAd	Fan activation intervention differential. (see "**FSt**", "**Fot**").	1.0...50.0	2.0	1-2	°C/°F
Fdt	Delay before fan activation after defrosting	0...250	0	1-2	min
dt	Dripping time.	0...250	0	1-2	min
dFd	Disables evaporator fans. **n**(0)= fans enabled; **y**(1)= fans disabled.	y/n	y	1-2	flag
FCO	Disables fans with compressor off (Off) **n**(0)= fans off; **y**(1)= fans active (with thermostat; in response to value read by defrost probe, see "**FSt**" parameter); **dc**(2) = duty cycle (using parameters "**Fon**" and "**FoF**"	n/y/dc	y	1-2	flag
Fod	Enables fan stop with door open and fan re-start when door is closed (if fans were on). **n**(0)=fans stop; **y**(1)=fans unchanged	n/y	n	2	flag
FdC	Fan shut-down delay after compressor stop **0**=function excluded	0...99	0	2	min
Fon	Fan start-up time in Duty mode Cycle; valid for **FCO**=dc	0...99	0	2	min
Fof	Fan shut-down time in Duty Cycle; valid for **FCO**=dc	0...99	0	2	min
SCF	Condenser fan set point.	-50.0...150.0	10	2	°C/°F
dCF	Condenser fan differential.	-30...30	2	2	°C/°F
tCF	Condenser fan start-up delay after defrost.	0...59	0	2	min
dCd	Exclusion of condenser fans in defrost mode.	n/y	y	2	flag

ALLARMS-LABEL AL

PAR.	DESCRIPTION	RANGE	DEFAULT	LEVEL	M.U.
Att	Determines if "**LAL**" and "**HAL**" are expressed as absolute values or as a differential related to the set point. **0**= absolute value; **1**= value related to set point.	0/1	0	2	flag
AFd	Alarm differential.	1.0...50.0	2.0	1-2	°C/°F
HAL (4)	Maximum alarm. Temperature limit (whose absolute or relative value status is regulated by "**Att**") above which the alarm is activated.	LAL...150.0	50.0	1-2	°C/°F
LAL (4)	Minimum alarm. Temperature limit (whose absolute or relative value status is regulated by "**Att**") below which the alarm is activated.	-50.0...HAL	-50.0	1-2	°C/°F
PAO (5)	Alarm exclusion time after start-up of instrument following a power failure.	0...10	0	1-2	hours
dAO	Alarm exclusion time after defrosting.	0...999	0	1-2	min
OAO	High and low temperature alarm delay after disabling digital input (door closed).	0...10	0	2	hours
tdO	Time out after alarm signal when disabling digital input (door open).	0...250	0	2	min
tAO (5)	Temperature alarm delay time.	0...250	0	1-2	min
dAt	Alarm for defrosting ended due to time out. **n**(0)=alarm not active **y**(1)=alarm active.	n/y	n	2	flag
rLO	Controllers disabled by external alarm **0**= no resources are disabled; **1**= disables compressor and defrosting; **2**= disables compressor, defrosting and fans.	0/1/2	0	2	num
AOP	Polarity of alarm output: **0** = alarm active and output disabled; **1** = alarm active and output enabled.	0/1	1	2	flag
PbA	Configuration of temperature alarm on probe 1 and/or 3: **0**= on probe 1 (thermostat control); **1**= on probe 3 (display); **2**= on probe 1 and 3 (thermostat control and display); **3**= on probe 1 and 3 (thermostat control and display) on external threshold .	0/1/2/3	0	2	num
SA3	Probe 3 alarm setpoint.	-50.0...150.0	50	2	°C/°F
dA3	Probe 3 alarm differential.	-30.0...30.0	2.0	2	°C/°F

LIGHT & DIGITAL INPUTS LABEL LIT

PAR.	DESCRIPTION	RANGE	DEFAULT	LEVEL	M.U.
dSd	Light relay enable from door switch. **n**(0) = door open, light does not turn on; **y**(1)= door open, light turns on (if it was off)	n/y	y	2	flag
dLt	Light relay disabling delay after closing door if "**dSd**"=y	0...31	0	2	min
OFl	Light relay disabled even if disabling delay "dLt" is active	n/y	n	2	flag
dOd	Digital input switches off loads	n/y	n	2	flag
dAd	Delay in enabling digital input	0...055	0	2	min
dOA	Forced behaviour from digital input: **0**= no enabling; **1**= compressor enabled **2**= fans enabled; **3**= compressor and fans enabled	0/1/2/3	0	2	num
PEA	Enables forced behaviour from door light and/or from external alarm. **0**= function disabled; **1**= associated with door light **2**= associated with external alarm; **3**= associated with door light and external alarm.	0/1/2/3	0	2	num
dCO	Delay in enabling compressor with consensus.	0...250	0	2	min
dFO	Delay in enabling fans with consensus.	0...250	0	2	min

LINK - LABEL LIN

PAR.	DESCRIPTION	RANGE	DEFAULT	LEVEL	M.U.
L00	Allows selection of instrument as Master (0), Slave (from 1 to 7). The DipSwitches(*) on the Echo repeater also allow the selection of the Echo	0...7	0	2	num
L01	Number of Slaves in the Network Refers to Master only Number of Slaves in network (from 0 to 7). Per Slaves/Echo leave value =0	0...7	0	2	num
L02	Enables ECHO control on slave: **0**= instrument does not control ECHO **1**= instrument controls ECHO	0/1	0	2	num
L03	Refers to Master and Slave Defrosting Simultaneous/sequential. Master: **n**(0) = simul taneous; **y**(1) sequential. Slave: **n**(0) = ignore; **y**(1) = accept.	n/y	n	2	flag
L04	Refers to Slave only. Distributed display. **n**(0) = Slave displays local values; **y**(1)= Slave displays Master display	0...055	y	2	flag
L05	Activation of Master network functions: **n**(0)= does not ask Slaves for activation of remote functions; **y**(1)= asks Slaves for activation of remote functions. Slave: **n**(0)= ignores activation of remote functions from Master; **y**(1)= accepts activation of remote functions from Master.	0/1/2/3	n	2	flag
L06	Shuts down resources (compressors, fans, etc) at end of defrosting. **n**(0)= no; **y**(1)= yes,	0/1/2/3	y	2	flag

NIGHT & DAY CONTROL-NAD LABEL

PAR.	DESCRIPTION	RANGE	DEFAULT	LEVEL	M.U.
The following parameters are present in each of the subfiles that can be displayed inside nAd: d0, d1, d2, d3, d4, d5, d6 and Ed (see Programming Menu Diagram)					
E00	Functions enabled during events; **0**=control disabled; **1**= reduced set point; **2**= reduced set point+light; **3**= reduced set point+light+aux; **4**= instrument off.	0...4	0	2	num
E01	Hours/minutes of start of intervention. Starting from this time, the "NIGHT" mode will be enabled. The duration is determined by E02.	0...23/0...59	0	2	hours/ min
E02	Duration of event. Sets the duration of the event that begins at time E01 determined by value **E00**.	0...99	0	2	hours
E03 (6)	Blocking/unblocking daily or holidays defrosting**.** **0**= "work days" defrost sequence defined by parameters **dE1**...**dE8**; **1**= "festive/holidays" defrost sequence defined by parameters **F1...F8**.	0/1	0	2	num

COMMUNICATION ADD LABEL

PAR.	DESCRIPTION	RANGE	DEFAULT	LEVEL	M.U.
dEA	Device address in family (valid values from 0 to 14).	0...14	*	1-2	num
FAA	Device family (valid values from 0 to 14).	0...14	0	1-2	num
PtY (9)	Parity bit Modbus **n**(0)=none; **E**(1)=even; **o**(2)=odd.	n/E/o	n	1-2	num
StP (9)	Stop bit Modbus.	1b/2b	1b	1-2	flag
*** 0 (Telvis models); 1 (Modbus models).**					

DISPLAY - LABEL DIS

PAR.	DESCRIPTION	RANGE	DEFAULT	LEVEL	M.U.
LOC	Keyboard locked. It is still possible to access the menus; concerning setpoint, only visualisation is possible; **n**(0) = keyboard not locked **y**(1) = keyboard locked.	n/y	n	1-2	flag
PA1	Contains the password for level 1 parameters. Enabled if not 0.	0...250	0	1-2	num
PA2	Contains the password for level 2 parameters. Enabled if not 0.	0...250	0	2	num
ndt	Display with decimal point **n**(0) = without decimal point (only whole numbers); **y**(1) = with decimal point	n/y	n	1-2	flag
CA1	Temperature value to be added to that read by probe 1 as specified by parameter **CA**	-12.0...12.0	0	1-2	°C/°F
CA2	Temperature value to be added to that read by probe 2 as specified by parameter **CA**	-12.0...12.0	0	1-2	°C/°F
CA3	Temperature value to be added to that read by probe 3 as specified by parameter **CA**	-12.0...12.0	0	1-2	°C/°F
CA	Application of offset **0** = modifies the temperature displayed; **1** = is added to the temperature used by controllers not the temperature displayed that remains unchanged; **2**= adds to temperature displayed that is also used by controllers.	0/1/2	2	2	num
LdL	Minimum value that can be displayed.	-55.0...302	-50.0	2	°C/°F
HdL	Maximum value that can be displayed.	-55.0...302	140.0	2	°C/°F
ddL	Display during defrosting: **0**= displays temperature read by thermostat control probe; **1**= displays temperature read entering defrost cycle until set point is reached; **2**= displays "**deF**" label during defrosting until set point is reached (or when L**dd** expires).	0/1/2	1	1-2	flag
Ldd	Time out for unlocking display (with ddL=2) if defrosting lasts too long or **E07** error occurs.	0...255	0	1-2	min
dro (7)	Select °C or °F to display temperature: **0**= °C; **1**= °F.	0/1	0	1-2	flag
ddd	Value to be displayed: **0** = Set point; **1** = probe 1 (thermostat control); **2** = probe 2 (evaporator); **3** = probe 3 (display).	0/1/2/3	1	2	num
Ero	Establishes which analogue input to display on the ECHO including: **0**= display of associated device **1=** probe 1; **2**= probe 2; **3**= probe 3; **4**= Set-Point .	0...4	1	1-2	num

CONFIGURATION - CNF LABEL

PAR.	DESCRIPTION	RANGE	DEFAULT	LEVEL	M.U.
NOTE:	**It is mandatory to power cycle (switch off and back on) the controller anytime the parameters in CnF folder have been changed**				
H00	Selects probe, PTC or NTC **0**= PTC; **1**= NTC It is mandatory to power cycle (switch off and back on) the controller anytime this parameter has been changed to prevent malfunctioning and ensure correct configuration.	0/1	1	1-2	flag
H02	Quick activation time for functions with configured buttons. Not possible for aux (time expected = 1 second).	0...15	5	2	sec
H06	Button/input aux/door switch light active when instrument is off.	n/y	y	2	flag
H08	Stand-by operating mode **0**= only display switched off; **1**= display on and controls locked; **2**= display off and controls locked.	0/1/2	2	2	num
H11 (6)	Configuration of digital inputs/polarity: **0**= disabled; **1** = defrost; **2** = reduced set point; **3** = auxiliary **4** = door switch; **5**= external alarm; **6**= disables storage of HACCP alarms; **7**= stand-by (On/Off); **8**= maintenance request; **9**= HACCP alarm reset.	-9...9	0	2	num
H12 (6)	Configuration of digital inputs/polarity Same as **H11**.	-9...9	0	2	num
H21	Digital output B configurability: **0**= disabled; **1**= compressor; **2**= defrost; **3**= fans; **4**= alarm; **5**= auxiliary; **6**= stand-by; **7**= light; **8**= buzzer; **9**= Defrost 2nd evaporator; **10**= Condenser fans.	0...10	1	2	num
H22	Digital output A configurability. Same as **H21** (default defrost).	0...10	2	2	num
H23	Digital output C configurability. Same as **H21** (default fans).	0...10	3	2	num
H24	Digital output D configurability. Same as **H21** (default alarm).	0...10	4	2	num
H25 (7)	BUZZER output configurability. **0**= disabled; **1...7**= not used; **8**= enabled (default) if buzzer is present	0...10	8	2	num
H31	UP button configurability **0**= disabled; **1**= defrost; **2**= auxiliary; **3**= reduced set point; **4**= HACCP alarm reset; **5**= disables alarm HACCP; **6**= light; **7**= stand-by; **8**= maintenance request.	0...8	1	2	num
H32	DOWN button configurability Same as **H31** (**0**=disabled default)	0...8	0	2	num
H33	ESC button configurability Same as **H31** (**0**=disabled default)	0...8	0	2	num
H40	Enabling inversion of probe 1 and probe 2; **0**= Pb1 on channel 1, Pb2 on channel 2; **1**= Pb1 on channel 2, Pb2 on channel 1.	0...1	0	2	flag
H41	Presence of control probe: **n**(0)= not present; **y**(1)= present.	n/y	y	2	flag
H42	Presence of evaporator probe: **n**(0)= not present; **y**(1)= present.	n/y	y	2	flag
H43	Presence of display probe: **n**(0)= not present; **y**(1)= present (display probe); **2EP**(2) =probe on 2nd evaporator.	n/y/2EP	n	2	flag
H45	Start of defrosting for dual evaporator: **0**= defrost activated if temperature of 1st evaporator<**dSt** **1**= defrosting activated if at least one of the conditions is met: temperature 1st evaporator<**dSt**; temperature 2nd evaporator<**dS2**; 2= defrosting activated if both conditions are met: temperature 1st evaporator<**dSt**; temperature 2nd evaporator<**dS2**.	0/1/2	1	2	num
H48	Presence of RTC **n**(0)= not present; **y**(1)= present (Real Time Clock).	n/y	y	2	flag
rel	Minimum/maximum pressure switch error count time.	/	/	1-2	/
tAb	Parameter table; Reserved; Read only parameter.	/	/	1-2	/
PA2	In the CnF folder you can access level 2 parameters from label **PA2** when you enter the correct password by pressing the "set" button.				

PRESSURE SWITCH LABEL PRE

PAR.	DESCRIPTION	RANGE	DEFAULT	LEVEL	M.U.
PEn	Number of errors allowed per maximum/minimum pressure switch input.	0...15	10	2	num
PEI	Minimum/maximum pressure switch error count interval.	1...99	60	2	min

COPY CARD FPR LABEL

PAR.	DESCRIPTION	RANGE	DEFAULT	LEVEL	M.U.
UL	Transfer of parameter map from instrument to Copy Card.	/	/	1	/
dL	Transfer of parameter map from Copy Card to instrument.	/	/	1	/
Fr (8)	Formatting. Cancels all data in the Copy Card.	/	/	1	/

FUNCTIONS (folder with "FnC" label)The FnC folder (last folder visible from the Programming Menu) contains several functions that are activated using the "set" button SEE FUNCTIONS paragraph.

NOTE:

(**1**) See Duty Cycle page 4.

(**2**) In the deF folder there are two folders: "dd" (daily defrost) and "Fd" (festive defrost); the first folder includes the parameters dE1...dE8 (start of daily defrost) and the second folder includes the parameters **F1...F8** (start of festive defrost). The two folders can only be seen if parameter **dCt**=3 and RTC is declared present.
NOTE: Do not confuse the days d0...d6 related to the nAd folder with **dE1**...**dE8** daily defrost.

(**3**) If relative values are present (par. **Att**=1) parameter **HAL** is set to positive values and the parameter **LAL** is set to negative values (-**LAL**)

(**4**) Refers exclusively to high and low temperature alarms

(**5**) when changing from °C to °F or vice versa the set points, differentials, etc. are NOT converted (for example, "set=10 °C becomes set=10 °F")

(**6**) **NOTE**: positive or negative values change polarity, Positive values: active input when contact is closed; Negative values: active input when contact is open.

(**7**) Parameter visible if buzzer is present.

(**8**) If the Fpr parameter is used, the data previously stored on the Copy Card will be permanently lost. This operation cannot be undone.

(**9**) Only for Modbus models.

***** Value: to be compiled manually by user with any custom settings (if different from default settings).

****** Level: indicates the visibility level of parameters accessed using a password (see relevant paragraph).

MAX-MIN ALARMS

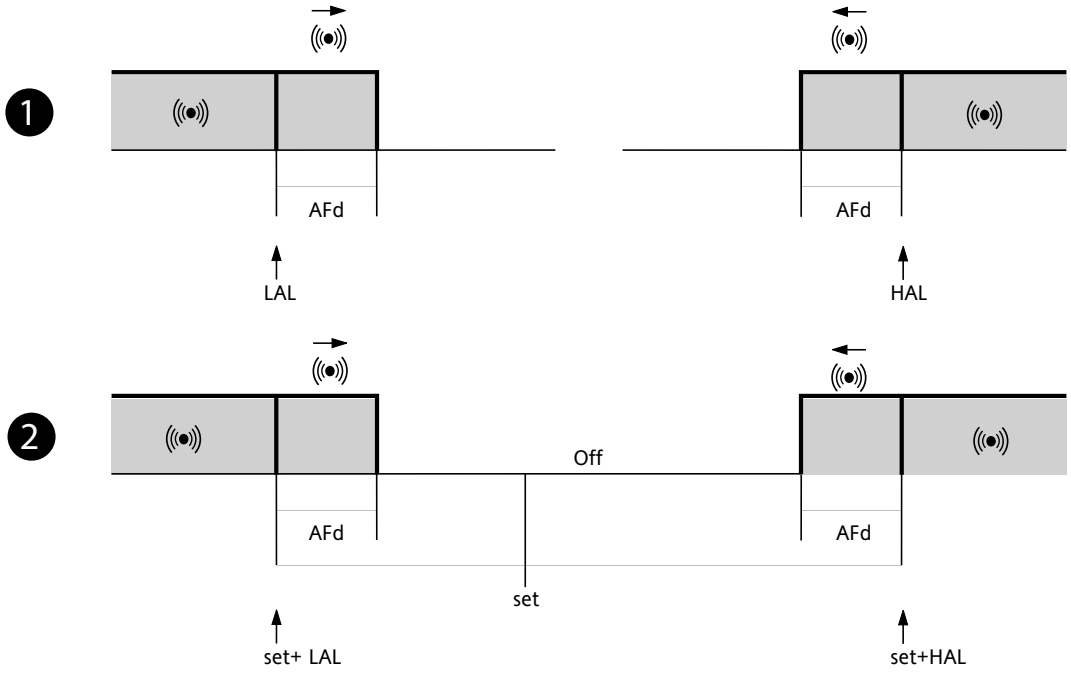

Temperature expressed as an absolute value (par "**Att**"=0) Abs(olute)

Temperature in relation to set point (par "**Att**"=1) rEL(ative)

	par. **Att** = 0	par. **Att**=1
Minimum temperature alarm	Temperature lower than or equal to **LAL** (**LAL** with sign)	Temperature lower than or equal to Set point + LAL*****
Maximum temperature alarm	Temperature greater than or equal to **HAL** (**HAL** with sign)	Temperature greater than or equal to Setpoint + **HAL****
Minimum temperature alarm release	Temperature higher than or equal to **LAL** + **AFd**	Temperature greater than or equal to Setpoint + **LAL + AFd**
Maximum temperature alarm release	Temperature lower than or equal to **HAL - AFd**	Temperature lower than or equal to Setpoint + **HAL - AFd**
*if **LAL** is negative it will be subtracted from the Setpoint **if **HA**L is negative it will be subtracted from the Setpoint		
if **Att**=reL(ative) **LAL** must be negative: therefore [Setpoint + **LAL**] is equal to [Setpoint - **LAL**]		

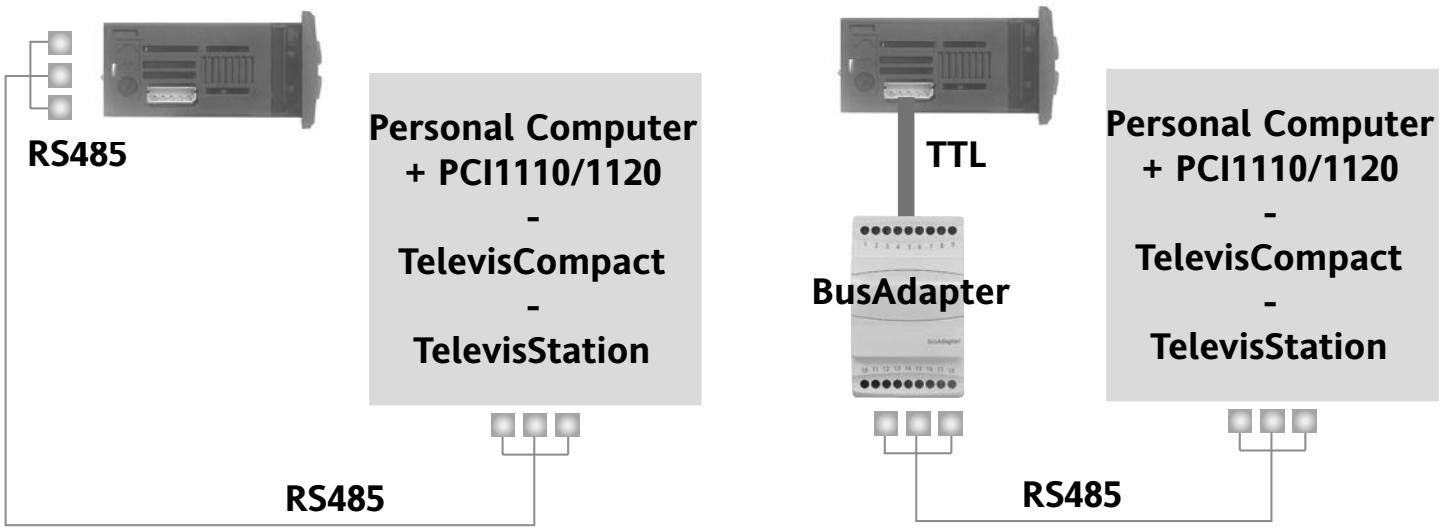

BusAdapter130/150
TTL - RS-485 serial interface on DIN rail for connecting the device and an RS-485 network designed for connection to Televis or ModBUS supervision system.

PCInterface1110/1120
PCInterface1110/1120
RS-232/RS-485 serial interface for connecting a PC and a series of instruments in an RS-485 network.
The device needs the BlueCard activation module supplied with the Eliwell software package licence to be plugged in.

NOTE: The technical characteristics in this document concerning measurements (range, accuracy, resolution, etc.) refer to the instrument in the strictest sense and not to any accessories provided such as probes, for example. This means, for example, that an error introduced by the probe is added to any error that is characteristic of the instrument.

TECHNICAL DATA

Casing	ID985 /S/E/CK - ID985 /E LX	PC+ABS UL94 V-0 resin plastic body, polycarbonate front, thermoplastic resin buttons
	ECHO	PC+ABS UL94 V-0 resin plastic body, polycarbonate front
Dimensions	ID985 /S/E/CK - ID985 /E LX	Front 76.4x35 mm (3.01x1.38 in.) (±0.2 mm), 59 mm depth (2.32 in.).
	ECHO	Front 48x28.6 mm (1.89x1.26 in.), 15 mm (0.59 in.) depth.
Mounting	ID985 /S/E/CK - ID985 /E LX	On panel, with drilling template 71x29 mm (2.80x1.14 in.) (+0.2/-0.1 mm)
	ECHO	On panel, with drilling template 45.9x26.4 mm (1.81x1.04 in.)
Storage temperature		-5…55 °C (23...131 °F)
Usage ambient humidity		-30…85 °C (-22...185 °F)
Storage ambient humidity		10…90 % RH (non-condensing)
Display range		-50.0…110.0 °C (-58…230 °F) (NTC); -55.0…140.0 °C (-67…284 °F) (PTC) without decimal point (parameter selectable), on display 3 # digits + sign.
Analogue inputs ID985 /S/E/CK - ID985 /E LX		Three PTC or NTC inputs (parameter-selectable).
Digital inputs		2 voltage-free parameter-configurable digital inputs.
Serial	ID985 /S/E/CK	RS485 for Televis connection - TTL for Copy Card connection.
	ID985 /E LX	TTL for Televis or Copy Card connection.
	ECHO	3-way connection (GND, DATA, 12 V) on quick connection terminal block.
Digital output	ID985 /S/E/CK	4 outputs on relays (A) SPDT 5(2) A ¼ hp 250 Vac (B) (C) (D) SPST 3 A 250 Vac
	ID985 /E LX	(A) SPDT 8(3) A ½ hp 250 Vac (B) (C) SPST 8(3) A ½ hp 250 Vac (D) SPST 5(2) A ¼ hp 250 Vac
Link output		Link
Buzzer		If present
Measurement range		From -55...140 °C (-67...284 °F)
Accuracy		Better than 0.5 % of bottom scale +1 digit.
Risolution		1 or 0.1 °C.
Consumption ID985 /S/E/CK - ID985 /E LX		2.5 W - 3 VA
Power supply	ID985 /S/E/CK	12-24 Vac / 12-36 Vdc ±10 % or 100-240 Vac ±10%
	ID985 /E LX	12 Vac ±10 % 50/60 Hz
	ECHO	From instrument it is connected to
Echo is supplied with a cable, lenght 2 m (78.74 in.). Can be extended up to 10 m (393.70 in.).		
NOTE: check the power supply specified on the instrument label; for information on relay capacity and power supplies contact the Sales Office.		

ID 985 /E LX 12 Vac

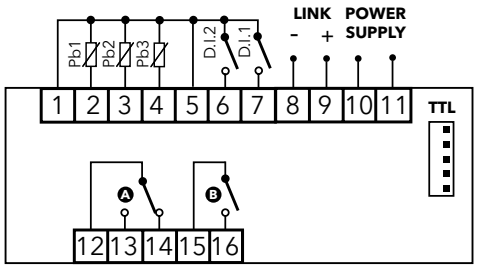

TERMINALS ID 985 /E LX	
8-9	Link (voltage; 8=+, 9=-)
10-11	Power supply 12 Vac
12-13-14	NC relay output (A) (defrost default, par. **H22**)
15-16	NO relay output (B) (compressor default, par. **H21**)
15-17	NO relay output (C) (fans default, par. **H23**)
18-19	NO relay output (D) (alarm default, par. **H23**)
TTL	TTL input for Copy Card and for connection to Televis system

ID 985 /S/E/CK 12 ... 2 4 Vac / 12 ... 36 Vdc

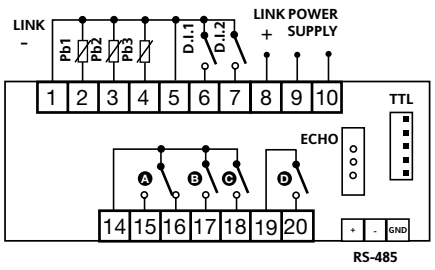

COMUNE TERMINALS	
1-2	Probe input 1 (thermostat control)
1-3	Probe input 2 (1st evaporator)
1-4	Probe input 3 (display or 2nd evaporator see par. **H43**)
TERMINALS ID 985 /S/E/CK	
5-6	Digital input 1
5-7	Digital input 2
TERMINALS ID 985 /E LX	
5-6	Digital input 2
5-7	Digital input 1

ID 985 /S/E/CK 100 ... 240 Vac

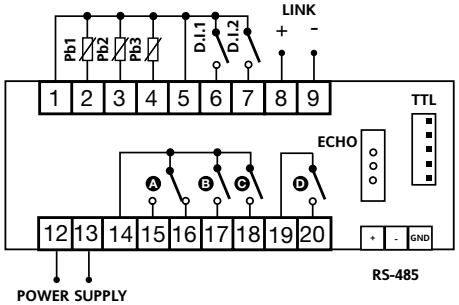

TERMINALS ID 985 /S/E/CK	
8-9	Link (voltage; 8=+, 9=-) *
8-1/5	Link (voltage; 8=+, 1=- or 5=-) **
12-13	Power supply *
9-10	Power supply **
14-15-16	NO relay output (A) (defrost default, par. **H22**)
14-17	NO relay output (B) (compressor default, par. **H21**)
14-18	NO relay output (C) (fans default, par. **H23**)
19-20	NO relay output (D) (alarm default, par. **H24**)
TTL	TTL input for Copy Card
RS485	Serial for connection to Televis system
*version 100...240 Vac ** version 12...24 Vac / 12..36 Vdc	

ECHO • DIP SWITCH (*)

The Echo repeater has 2 DipSwitches(*****) for configuring the repeater for the remote display of what appears on the display ID985 /S/E/CK in a master-slave network, as indicated below:

To set the DipSwitches(*****), remove the instrument backplate using a screwdriver or something similar. After making the configuration setting, close the backplate simply by pressing with the finger, aided by the side tabs. There is a groove for the wire on the bottom left of the backplate.
(*****) Contact the Sales Office for further information on feasibility and part number availability.

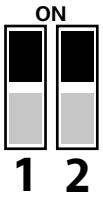

Dip1= OFF; Dip2= OFF
L00=0
The Echo displays what is displayed on the MASTER / Slave1...3 instrument • example 1 / 2

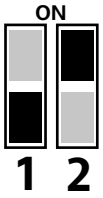

Dip1= ON; Dip2= OFF
L00=1
The Echo displays what is displayed on the Slave 1 instrument • example 1

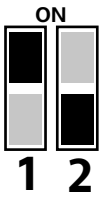

Dip1= OFF; Dip2= ON
L00=2
The Echo displays what is displayed on the Slave 2 instrument • example 1

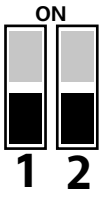

Dip1= ON; Dip2= ON
L00=3
The Echo displays what is displayed on the Slave 3 instrument • example 1

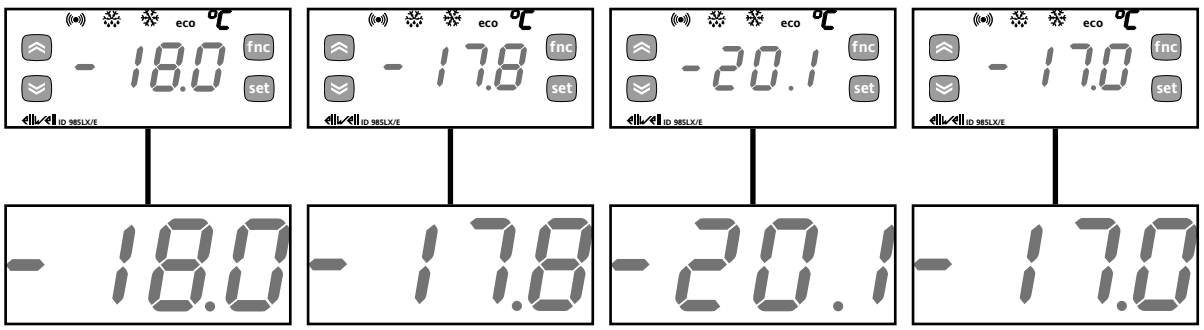

Example 1
Each ECHO slave repeats the corresponding ID985 /E slave

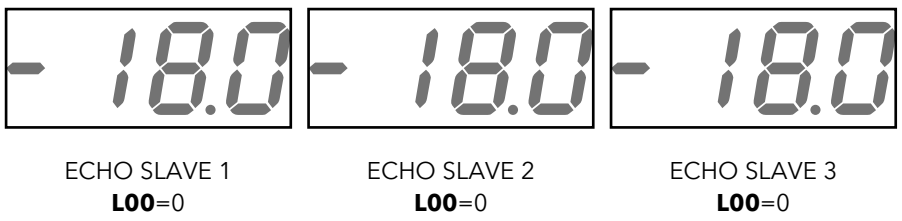

Example 2
All the ECHO slaves repeat the ID985 /E master display

RESPONSIBILITY AND RESIDUAL RISKS

Eliwell Controls S.r.L. shall not be liable for any damages deriving from:
- installation/use other than that prescribed and, in particular, which does not comply with the safety standards specified in the regulations and/or those given herein;
- use on boards which do not guarantee adequate protection against electric shock, water or dust when assembled;
- use on boards which allow dangerous parts to be accessed without the use of tools;
- tampering with and/or alteration of the product;
- installation/use on boards that do not comply with the standards and regulations in force.

DISCALIMER

This document is exclusive property of Eliwell Controls S.r.L. and cannot be reproduced and circulated unless expressly authorized by Eliwell Controls S.r.L. Although Eliwell Controls S.r.L. has taken all possible measures to guarantee the accuracy of this document, it declines any responsibility for any damage arising out of its use.
The same applies to any person or company involved in preparing and writing this manual. Eliwell Controls S.r.L. reserves the right to make any changes or improvements without prior notice and at any time.

CONDITIONS OF USE

PERMITTED USE

For safety reasons the instrument must be installed and used in accordance with the instructions supplied.
Users must not be able to access parts with \dangerous voltage levels under normal operating conditions.
The device must be suitably protected from water and dust depending on the specific application and only be accessible using special tools (except for the front keypad).
The device is ideally suited for household use and/or similar use in the refrigeration sector and has been tested with regard to safety in accordance with the European harmonized reference standards.
It is classified as follows:
- for its construction, as an automatic electronic control device to be independently mounted;
- for its automatic operating features, as a 1 B-type operated control type device;
- as a Class A device in relation to the category and structure of the software.

UNPERMITTED USE

The use of the unit for applications other than those described above is forbidden.
It should be noted that the relay contacts supplied with the device are functional and therefore exposed to potential faults. Any protection devices required to comply with product requirements or dictated by common sense due to obvious safety reasons should be installed externally.

DISPOSAL



The appliance (or the product) must be disposed of separately in compliance with the local standards in force on waste disposal

UK Authorized Representative:
Schneider Electric Limited
Stafford Park 5
Telford, TF3 3BL
United Kingdom

Eliwell Controls s.r.l.
Via dell'Industria, 15 • Z.I. Paludi 32016 Alpago (BL) - ITALY
T +39 0437 986 111 **| www.eliwell.com**
Technical Customer Support
T +39 0437 986 300 • E techsuppeliwell@se.com
Sales
T +39 0437 986 100 (Italy) • +39 0437 986 200 (other countries)
E saleseliwell@se.com

cod. 9IS23080 • ID 985 /S/E/CK - ID985 /E LX • rel. 11/21 • EN

© Eliwell 2021 - All rights reserved.