EWCM 9000 PRO DOMINO
EWCM 9000 PRO-HF

Controller for compressor racks



USER GUIDE

9MA10272.01

The information provided in this documentation contains general descriptions and/or technical characteristics of the performance of the products contained herein. This documentation is not intended as a substitute for and is not to be used for determining suitability or reliability of these products for specific user applications. It is the duty of any such user or integrator to perform the appropriate and complete risk analysis, evaluation and testing of the products with respect to the relevant specific application or use thereof. Neither Schneider Electric nor Eliwell nor any of its affiliates or subsidiaries shall be responsible or liable for misuse of the information contained herein. If you have any suggestions for improvements or amendments or have found errors in this publication, please notify us.

You agree not to reproduce, other than for your own personal, noncommercial use, all or part of this document on any medium whatsoever without permission of Schneider Electric or Eliwell, given in writing. You also agree not to establish any hypertext links to this document or its content. Either Schneider Electric or Eliwell does not grant any right or license for the personal and noncommercial use of the document or its content, except for a non-exclusive license to consult it on an “as is” basis, at your own risk. All other rights are reserved.

All pertinent state, regional, and local safety regulations must be observed when installing and using this product. For reasons of safety and to help ensure compliance with documented system data, only the manufacturer should perform repairs to components.
When devices are used for applications with technical safety requirements, the relevant instructions must be followed.

Failure to use Eliwell software or approved software with our hardware products may result in injury, harm, or improper operating results.

Failure to observe this information can result in injury or equipment damage.

© 2019 Eliwell. All Rights Reserved.

CONTENTS

CHAPTER 1. Introduction 14
1.1. General description of the EWCM 9000 PRO (HF) 14
1.1.1. EWCM 9000 PRO range 14
1.1.2. Main features of EWCM 9000 PRO (HF) 16
1.1.3. Main components of EWCM 9000 PRO (HF) 17
1.1.4. Main components of EXP 4D PRO 18
CHAPTER 2. Mechanical installation 19
2.1. Before starting 19
2.2. Disconnection from the power supply 19
2.3. Comments concerning programming 20
2.4. Operating environment 20
2.5. Comments concerning installation 21
2.6. Assembly of EWCM 9000 PRO (HF) on DIN rail 22
2.7. Assembly of EXP 4D PRO on DIN rail 24
2.8. Panel assembly of EWCM 9000 PRO (HF) 27
2.9. EVS communication module mounting 29
2.10. Assembly of the EVK PRO DISPLAY 30
2.10.1. Panel mounting 30
2.10.2. Accessories for wall mounting 31
CHAPTER 3. Electrical connections 33
3.1. Best wiring practices 33
3.1.1. Wiring guidelines 33
3.1.2. Rules for screw-type terminal boards 34
3.1.3. Protecting the outputs from damage from inductive loads 35
3.1.4. Specific considerations for handling 37
3.1.5. Analogue inputs-probes 37
3.1.6. Serial connections 38
3.2. Connectors 40
3.2.1. EWCM 9000 PRO base board connectors 40
3.2.2. EWCM 9000 PRO upper board connectors 41

3.3. EWCM 9000 PRO (HF) wiring diagram 41
3.3.1. Wiring diagram for base board terminals 42
3.3.2. Wiring diagram for upper board terminals 43
3.3.3. Connection of EVK PRO DISPLAY 46
3.4. EXP 4D PRO wiring diagram 47
3.5. EVS compatible communication modules 48
3.6. Connection examples 51
3.6.1. Analogue input connection examples 51
3.6.2. Analogue output connection examples 56
3.7. EWCM 9000 PRO (HF) protocol connectivity 58
3.7.1. Example: Connection in CAN expansion bus network (Field) 58
3.7.2. DIP Switch expansion EXP 4D PRO 59
3.7.3. Example: RS 485 connection (Field) 61
3.7.4. Example: RS 485 connection 62
3.7.5. Example: Connection on CAN expansion bus (Network) 63
3.8. Ethernet connection 64
3.8.1. Example: Binding TCP 66
CHAPTER 4. Technical data 67
4.1. Environmental and electric characteristics 67
4.2. Characteristics of EWCM 9000 PRO (HF) (/SSR) 69
4.3. Analogue characteristics 70
4.3.1. Analogue input characteristics 70
4.3.2. I/O characteristics of EXP 4D PRO 71
4.3.3. Analogue output characteristics 72
4.4. Display 72
4.4.1. EVK PRO DISPLAY 72
4.5. Serial ports 72
4.5.1. USB Ports 73
4.5.2. Ethernet Port 74
4.6. Battery flap 75
4.7. Memory capacity 75
4.7.1. Internal memory 75
4.7.2. External memory 76
4.8. Power supply 78
4.9. Mechanical dimensions 80

CHAPTER 5. User interface 82
5.1. EWCM 9000 PRO (HF) user interface 82
5.2. EVK PRO DISPLAY user interface 83
5.3. Keys and LEDs 83
5.4. Upload remote pages and BIOS parameters 84
5.5. Fundamental state display 85
5.6. Access to menus 85
5.7. Navigation Menu 86
CHAPTER 6. Physical I/O configuration and serial ports 87
6.1. Configuration of analogue inputs 88
6.1.1. Analogue input configuration for EXP 4D PRO 89
6.1.2. Permitted configurations for analogue inputs 90
6.1.3. Configuration of (LOW VOLTAGE - SELV) analogue outputs 91
CHAPTER 7. Functions 92
7.1. Transcritical installation 92
7.2. Low Temperature (LT line) 93
7.2.1. LT line I/O allocation 93
7.2.2. LT line regulation 94
7.2.3. LT line parameters | 3-2 Low Temp 98
7.2.4. LT line compressor alarms 100
7.3. High Temperature (HT line) 104
7.3.1. HT line I/O allocation 104
7.3.2. HT line regulation 106
7.3.3. HT line pressure limitation 109
7.3.4. HT line parameters | 3-3 High Temp 110
7.3.5. HT line compressor alarms 112
7.4. High Pressure (HP) 117
7.4.1. I/O HP allocation 117
7.4.2. HP control 118
7.4.3. High Pressure parameters | 3-4 High Pressure 119
7.4.4. HP alarms 121
7.5. Gas Cooler 122
7.5.1. Gas Cooler I/O allocation 122
7.5.2. Parameters | 3-5 Gas Cooler 125

7.5.3. Gascooler alarms 126
7.6. Heat Recovery 128
7.6.1. Heat recovery I/O allocation 128
7.6.2. Heat Recovery enabling 130
7.6.3. Heat recovery parameters | 3.6 - 3.7 Heat Recovery 132
7.7. Liquid Receiver (LR) 136
7.7.1. Flash Gas Valve (FGV) 136
7.7.2. Liquid receiver resource allocation 136
7.7.3. Flash Gas Valve (FGV) regulation 136
7.7.4. Flash Gas Valve parameters | 3-8-1 Flash Gas Valve 137
7.7.5. Liquid receiver alarms 137
7.7.6. Parallel compression (PC) 138
7.7.7. Parallel compression resource allocation 138
7.7.8. Parallel compression (PC) regulation 138
7.7.9. Parallel compression parameters | 3-8-2 Parallel compr. 140
7.7.10. Parallel compression alarms 142
7.8. Intermediate heat exchanger (HE) 144
7.8.1. Intermediate heat exchanger resource allocation 144
7.8.2. Intermediate heat exchanger regulation 144
7.8.3. Intermediate heat exchanger parameters | 3-9 Heat Exchanger 145
7.8.4. Intermediate exchanger alarms 145
7.9. Oil management (oil) 146
7.9.1. Oil resource allocation 146
7.9.2. Oil management regulation 147
7.9.3. Oil pressure control 147
7.9.4. Oil parameters | 3-10 Oil 147
7.9.5. Oil management alarms 148
CHAPTER 8. Parameters 149
8.1. EWCM 9000 PRO parameters table 150
8.1.1. EWCM 9000 PRO passwords 150
8.1.2. | 3-13 Bios 151
8.1.3. | 3-1 System 158
8.1.4. | 3-2 Low Temp 159
8.1.5. | 3-3 High Temp 162
8.1.6. | 3-4 High Pressure 165

8.1.7. | 3-5 Gas Cooler 168
8.1.8. | 3-6 Heat Recovery 1 169
8.1.9. | 3-7 Heat Recovery 2 171
8.1.10. | 3-9 Heat Exchanger 176
8.1.11. | 3-10 Oil 177
8.1.12. | 3-11 Alarms 178
8.1.13. | 3-12 IO Allocation 202
8.1.14. Resources Table 232
8.2. RTC 246
8.3. Floating Suction 246
8.3.1. HT Mode 246
8.3.2. LT Mode 247
8.3.3. Control condition 247
8.3.4. Floating Suction resources table 247
CHAPTER 9. Alarms 248
9.3.1. Alarm Type 248
9.3.2. Alarms Bypass 249
9.3.3. Alarm mute 249
9.3.4. Alarm Enabling 250
9.3.5. Alarm log 250
9.3.6. Alarms table 251
CHAPTER 10. Data logger and time bands 258
10.1. Time bands 258
10.2. Time Bands table 259
10.3. Data logger 264
10.4. Data logger table 264
CHAPTER 11. Service Menu 267
11.1. [6.1/6.2 Output test] 267
11.2. [6.3 Parameter management] 267
11.2.1. [6.3.2/6.3.3 User Settings] 267
11.2.2. [6.3.4 Factory settings] 267
11.3. [6.4 Reset compressors hours] 267
11.4. [6.5 Versions] 268

CHAPTER 12. EWCM 9000-HF programming 269
12.1. Case 1: connection with a USB memory stick 269
12.2. Case 2: connection to a PC via USB cable 270
12.3. Case 3: connection with a PC via Ethernet cable 270
12.4. Downloading the BIOS 271
12.4.1. Download the BIOS from USB memory stick 271
12.4.2. Download the BIOS from PC 271
CHAPTER 13. Device Manager PRO 272
13.1. What is Device Manager PRO 272
13.1.1. Introduction 272
13.1.2. Compatible parametric controllers 272
13.1.3. Installation requirements 272
13.2. Related documents 272
13.3. About Device Manager PRO 273
13.4. All Parameters menu 273
13.4.1. Machine parameters 273
13.4.2. I/O Allocation Wizard 275
13.4.3. Layout 279
13.4.4. SoftScope 280
13.4.5. Updates 283

SAFETY INFORMATION

Important information

Read these instructions carefully, and look at the equipment to become familiar with the device before trying to install, operate, service, or maintain it. The following special messages may appear throughout this documentation or on the equipment to warn of potential hazards or to call attention to information that clarifies or simplifies a procedure.



The addition of this symbol to a danger warning label indicates the existence of an electrical danger that could result in personal injury should the user fail to follow the instructions.



This is the safety warning symbol. It is used to warn the user of the potential dangers of personal injury. Observe all the safety warnings accompanied by this symbol to avoid the risk of serious injury or death.

⚠ DANGER

DANGER indicates a dangerous situation that, unless avoided, **will result in** death or serious injury**.**

⚠ WARNING

WARNING indicates a potentially dangerous situation which, **if not avoided,** could result in death or serious injury.

⚠ CAUTION

CAUTION indicates a potentially dangerous situation which, **if not avoided,** could result in minor or moderate injury.

NOTICE

NOTICE used in reference to procedures not associated with physical injuries.

PLEASE NOTE

Electrical equipment must be installed, used and repaired by qualified personnel only.
No responsibility is assumed by Schneider Electric and Eliwell for any consequences arising out of the use of this material.

A qualified person is one who has skills and knowledge related to the construction and operation of electrical equipment and its installation, and has received safety training to recognize and avoid the hazards involved.

Qualification of Personnel

Only appropriately trained persons who are familiar with and understand the contents of this manual and all other pertinent product documentation are authorized to work on and with this product.

The qualified person must be able to detect possible hazards that may arise from parameterization, modifying parameter values and generally from mechanical, electrical, or electronic equipment. The qualified person must be familiar with the standards, provisions, and regulations for the prevention of industrial accidents, which they must observe when designing and implementing the system.

Permitted use

This product is used to control transcritical CO2 booster / parallel compression refrigeration units.

The products may only be used in compliance in accordance with all applicable safety regulations and directives, the specified requirements, and the technical data.

Prior to using the product, you must perform a risk assessment in view of the planned application. Based on the results, the appropriate safety-related measures must be implemented.

Since the product is used as a component in an overall machine or process, you must ensure the safety of persons by means of the design of this overall system.

It must be adequately protected from water and dust with regard to the application, and must only be accessible using a keyed or tooled locking mechanism (with the exception of the front panel).

The device is also suitable for use in commercial and household refrigeration appliances and/or similar equipment and has been tested in accordance with the harmonized European reference standards.

Prohibited use

Any use other than that described in the previous paragraph, Permitted Use, is strictly forbidden.

The relay contacts supplied are electromagnetic and are subject to wear. The protection devices required by international or local laws must be installed outside the instrument.

Liability and residual risks

The liability of Schneider Electric and Eliwell is limited to the correct and professional use of the product according to the directives referred to herein and in the other supporting documents, and does not cover any damage (including but not limited to) the following causes:

- unspecified installation/use and, in particular, in contravention of the safety requirements of established legislation and/or specified in this document;
- use on equipment which does not provide adequate protection against electrocution, water and dust in the actual installation conditions;
- use on equipment in which dangerous components can be accessed without the use of specific tools;
- installation in equipment which does not comply with established legislation and technical standards.

Disposal



The equipment (or product) must be subjected to separate waste collection in compliance with the local legislation on waste disposal.

Date of production

The date of production is shown on the device label, indicating the week and year of production (WW-YY).

ABOUT THE BOOK

Document scope

This document describes the **EWCM 9000 PRO (HF) compressor rack controllers** and relative accessories, including information on installation and wiring.

Use this document to:

- Install and use the **compressor rack controller EWCM 9000 PRO (HF)**.
- Connect the **compressor rack controller EWCM 9000 PRO (HF)** to a programming device with **DeviceManager PRO software.**
- Connect the **CO2 compressor rack controller EWCM 9000 PRO-HF** to a programming device with **FREE Studio software**.
- Interface the **compressor rack controller EWCM 9000 PRO (HF)** with I/O expansion modules and graphic display **EVK PRO DISPLAY.**
- Become familiar with the functions of the **compressor rack controller EWCM 9000 PRO (HF)**.

NOTE: Read this document and all related documents carefully before installing, operating or maintaining the controller.

Note regarding validity

This document is valid for:

EWCM 9000 PRO: DeviceManager PRO.

EWCM 9000 PRO-HF: FREE Studio (v.3.9.1.2 or greater), FREE Studio Plus (v.1.0.0).

The technical characteristics of the devices described in this manual can also be consulted on-line.

The characteristics illustrated in this manual should be identical to those which can be consulted on-line. In line with our policy of continuous improvement, we may revise the contents to improve clarity and accuracy. If you note any discrepancies between the manual and the information consulted on-line, please use the latter as a reference.

Related documents

Document title	Reference document code
FREE Studio Plus software on-line guide manual	9MA10256 (ENG) 9MA00256 (ITA)
EWCM 9000 PRO (HF) - Instruction Sheet	9IS54503
EXP 4D PRO - Instruction Sheet	9IS54504
EVK PRO DISPLAY - Instruction Sheet	9IS54505
FREE EVS Plugin – Instruction Sheet	9IS54405

You can download these technical publications and other technical information from our website at:

www.eliwell.com

Product related information

⚠ ⚠ DANGER

HAZARD OF ELECTRIC SHOCK, EXPLOSION OR ELECTRIC ARC

- Disconnect all power from all equipment including connected devices prior to removing any covers or doors, or installing or removing any accessories, hardware, cables, or wires except under the specific conditions specified in the appropriate hardware guide for this equipment.
- Always use a properly rated voltage sensing device to confirm the power is off where and when indicated.
- Replace and secure all covers, accessories, hardware, cables, and wires and confirm that a proper ground connection exists before applying power to the unit.
- Use only the specified voltage when operating this equipment and any associated products.

Failure to follow these instructions will result in death or serious injury.

This equipment has been designed to operate outside of any hazardous location, and exclusive of applications that generate, or have the potential to generate, hazardous atmospheres. Only install this equipment in zones known to be free, at all times, of hazardous atmospheres.

⚠ DANGER

POTENTIAL FOR EXPLOSION

- Install and use this equipment in non-hazardous locations only.
- Do not install and use this equipment in applications capable of generating hazardous atmospheres, such as those applications employing flammable refrigerants.

Failure to follow these instructions will result in death or serious injury.

For information concerning the use of control equipment in applications capable of generating hazardous materials, consult your local, regional, or national standards bureau or certification agency.

⚠ WARNING

LOSS OF CONTROL

- The control system designer must consider the potential failure modes of the control circuit and, for some critical control functions, provide a means for reaching a safe condition during and after a circuit failure. Examples of critical control functions are the emergency stop and end of travel stop, power supply cut-off and restart.
- Separate or redundant control circuits must be provided for critical control functions.
- The system control circuits can include communication connections. Keep in mind the implications of transmission delays or sudden connection failures.
- Comply with all the standards regarding accident protection and the local applicable safety directives.(1)
- Every implementation of this device must be tested individually and completely in order to verify its proper operation before putting it in service.

Failure to follow these instructions can result in death, serious injury, or equipment damage.

(1) For additional information, refer to the standards NEMA ICS 1.1 (latest edition), “Safety Guidelines for the Application, Installation, and Maintenance of Solid State Control” and NEMA ICS 7.1 (latest edition) “Safety Standards for Construction and Guide for Selection, Installation and Operation of Adjustable-Speed Drive Systems” or to equivalent standards that regulate your particular location.

⚠ WARNING

INCORRECT OPERATION OF THE DEVICE

- Only use software approved by Eliwell when using this device.
- Update your application program each time the physical hardware configuration changes.

Failure to follow these instructions can result in death, serious injury, or equipment damage.

Pay attention and take all precautions when using this product as a control device to avoid unforeseen consequences deriving from the operation of the controlled machine, variations in the controller state or modification of the data memory or machine operating parameters.

⚠ WARNING

INCORRECT OPERATION OF THE DEVICE

- Configure and install the mechanism enabling the remote HMI interface locally on the machine, to maintain local control over the machine whatever remote controls are sent to the application.
- Before trying to remotely control the application you must be fully familiar with the application and the machine.
- Take all precautions required to ensure the foreseen remote control of the machine, producing clear documentation for identification in the application and of the respective remote connection.

Failure to follow these instructions can result in death, serious injury, or equipment damage.

CHAPTER 1
Introduction

1.1. General description of the EWCM 9000 PRO (HF)

The **EWCM 9000 PRO (HF)** CO2 compressor rack controller is an Eliwell product designed to manage compressor racks. The **EWCM 9000 PRO-HF** is suited for transcritical CO2 applications and is fully programmable, used to adapt the controller to specific needs thanks to the options of integrating and changing the controller software application. A basic library is available for transcritical CO2 booster / parallel compression solutions.

In this manual, the photographs and drawings help to show the **EWCM 9000 PRO (HF)** controller (and the expansion module and the graphic display) and a purely illustrative. The relative dimensions and proportions may not correspond to the actual dimensions, nor are actual size or in scale. Moreover, all wiring and electrical diagrams are to be considered as simplified representations which do not correspond to the actual situation.

1.1.1. EWCM 9000 PRO range

The **EWCM 9000 PRO (HF) range** (see **Fig. 1 on page 15**) comprises:
- **EWCM 9000 PRO (42 I/O) with integrated display or without display**
- **EWCM 9000 PRO-HF (42 I/O) with integrated display or without display programmable**
- **EXP 4D PRO 4DIN (14 I/O) expansion module without display**
- **EVK PRO DISPLAY graphic display HMI**

	Reference	Description
EWCM 9000 PRO	**EPA00PCTA500**	EWCM 9000 PRO 42B /CO2T DOMINO
	EPAS0PCTA500	EWCM 9000 PRO 42B SSR /CO2T DOMINO
	EPA01PCTA500	EWCM 9000 PRO 42D /CO2T DOMINO
	EPAS1PCTA500	EWCM 9000 PRO 42D SSR /CO2T DOMINO
EWCM 9000 PRO-HF	**EPA00FCTA500**	EWCM 9000 PRO-HF 42B /CO2T
	EPAS0FCTA500	EWCM 9000 PRO-HF 42B SSR /CO2T
	EPA01FCTA500	EWCM 9000 PRO-HF 42D /CO2T
	EPAS1FCTA500	EWCM 9000 PRO-HF 42D SSR /CO2T
EXP 4D PRO	**EP4000000B00**	EXP 4D PRO 14 I/O
EVK PRO DISPLAY	**EPK010000000**	EVK PRO DISPLAY /GR

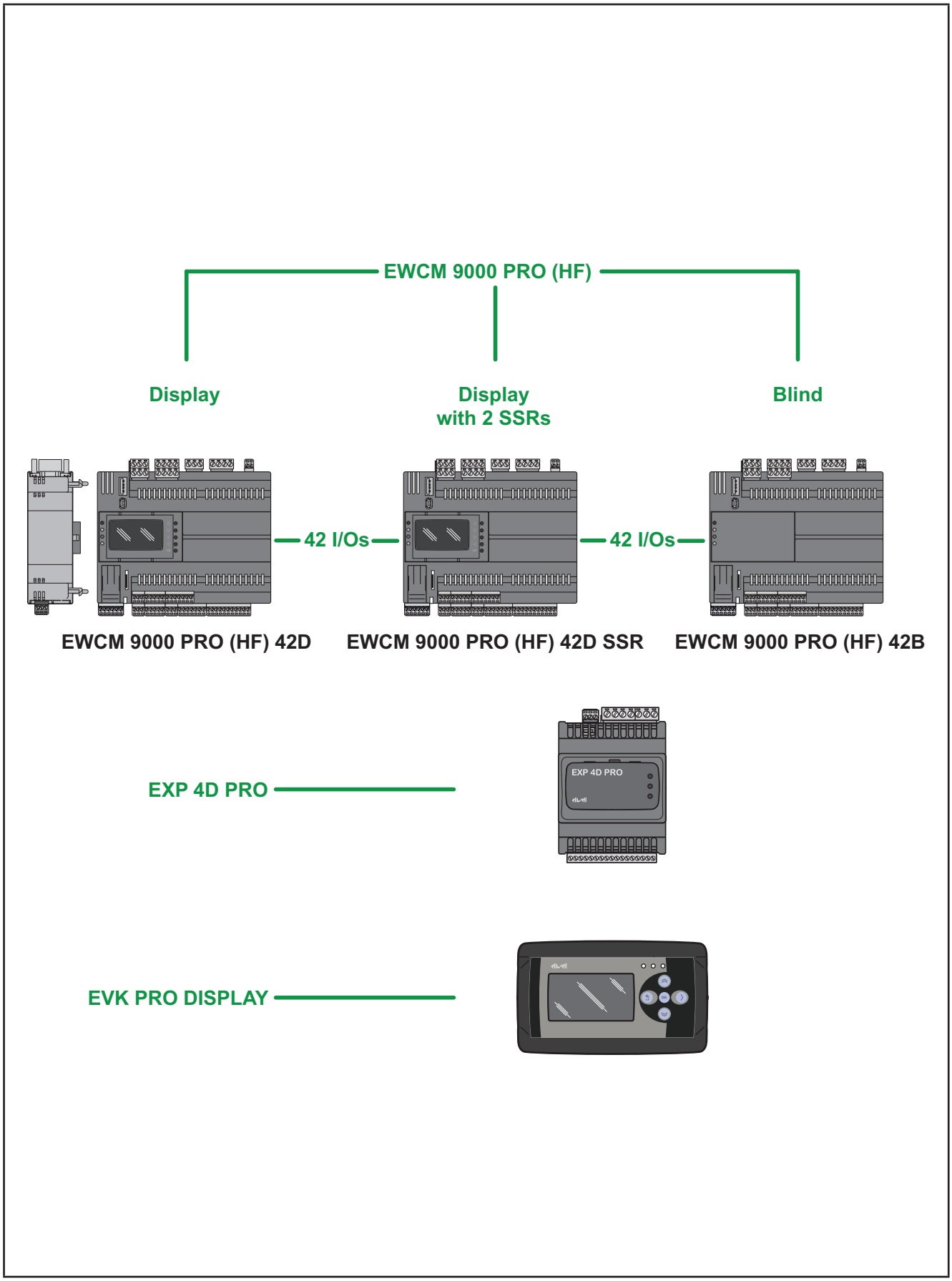

Fig. 1. EWCM 9000 PRO range

1.1.2. Main features of EWCM 9000 PRO (HF)

The **EWCM 9000 PRO (HF)** range (see **Fig. 2 on page 16**) comprises a Base Board and an Upper Board.

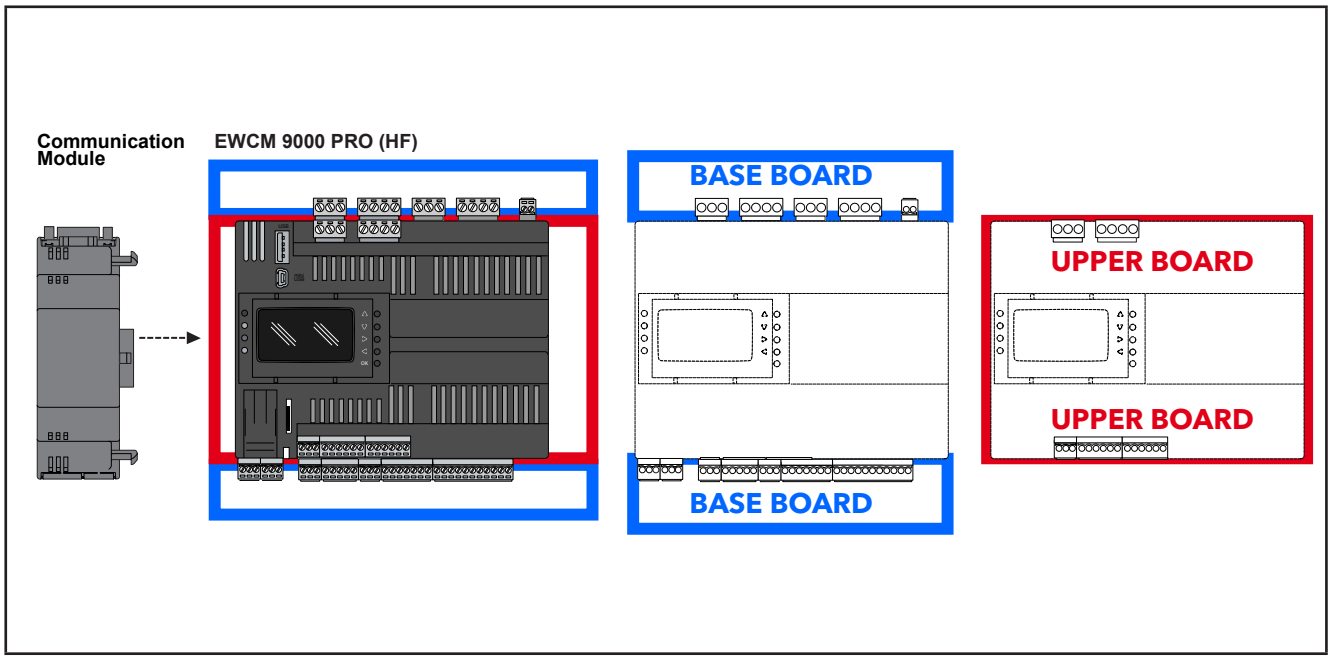

Fig. 2. EWCM 9000 PRO (HF): Base Board and Upper Board

The following table shows the main features of each version of the **EWCM 9000 PRO (HF)**:

	Power supply	I/O type	Display	Communication slots / ports
EWCM 9000 PRO (HF)	24 Vac / Vdc	**EWCM 9000 PRO 42• (/SSR)** has 42 inputs/outputs, which include: • 6 analogue outputs, • 12 analogue inputs, • 12 digital relay outputs (or 10 relays + 2 SSR), • 12 digital inputs (2 DI inputs can be used for a high-speed counter (HSC)).	**EWCM 9000 PRO (HF) 42D (/SSR)** has a built-in graphic user display.	**EWCM 9000 PRO (HF)** is equipped with: • 2 RS 485 serial ports, • 1 CAN expansion bus • 1 Ethernet port. • Type A USB expansion port for uploading and downloading parameter maps, applications, BIOS or files. • Type B mini USB [1] programming port with debug. • Slot for memory card (Micro SD [2]) for expanding the internal memory (for data recording and Webserver memory functions).
			EWCM 9000 PRO (HF) 42B (/SSR) has no display.	

[1] Type B mini USB, reference 1501187, included in the package.
[2] optional Micro SD card, not included in the package.

In addition to the **EWCM 9000 PRO (HF)** hardware, the following accessories are available for connection:

Compatible devices	Function	Versions
Graphic display EVK PRO DISPLAY	The **EVK PRO DISPLAY graphic display** is used to configure the **EWCM 9000 PRO (HF)** controller parameters.	**EWCM 9000 PRO (HF) 42D (/SSR)** has an integrated graph user display and can be connected to a remote **EVK PRO DISPLAY graphic display**
		EWCM 9000 PRO (HF) 42B (/SSR) has no display and can be connected to a remote **EVK PRO DISPLAY graphic display**
Expansion/s EXP 4D PRO	**The EWCM 9000 PRO (HF) controller** is expandable with up to 12 additional modules.	**14 I/O EXP 4D PRO** expansion module Inputs: • 4 digital inputs • 4 analogue inputs Outputs: • 4 digital outputs • 2 analogue outputs
EVS communication module/s	The **EWCM 9000 PRO (HF)** controller supports **EVS** communication modules for interfacing with various networks and field buses (CAN, RS 232, RS 485, LON) for integration in industrial systems and BMS.	**EWCM 9000 PRO** is expandable with one of the following communication modules: • **EVS CAN** • **EVS RS232/R** • **EVS RS485**
		EWCM 9000 PRO-HF is expandable with one of the following communication modules: • **EVS CAN** • **EVS RS232/R** • **EVS RS485 BACnet MS/TP** • **EVS RS485** • **EVS LON**

1.1.3. Main components of EWCM 9000 PRO (HF)

The components of the **CO2 compressor rack controller EWCM 9000 PRO (HF)** depend on the controller version.
In **Fig. 3 on page 17** the **CO2 compressor rack controller EWCM 9000 PRO (HF)** has installed terminal boards.

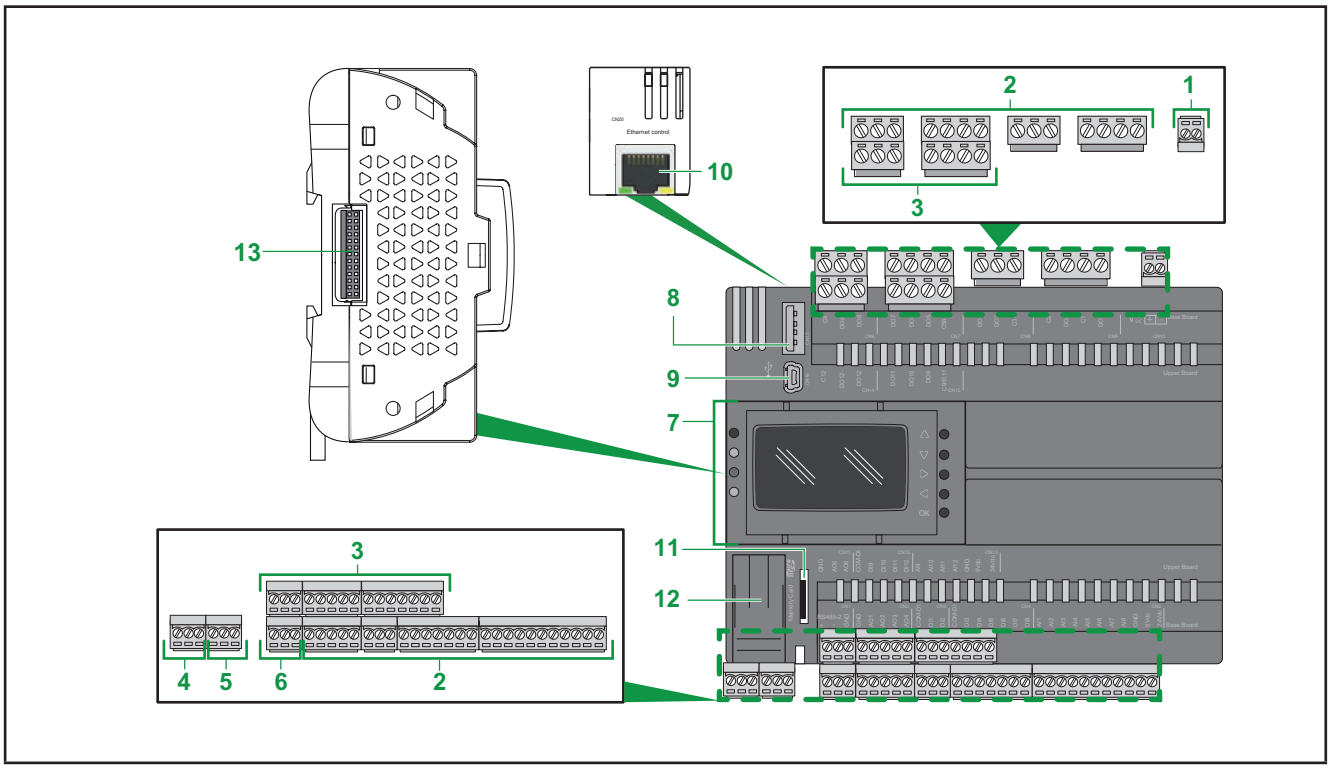

Fig. 3. Main components of the EWCM 9000 PRO (HF)

Label	Description	Location	For more information refer to
1	Power supply	Main Board	“4.8. Power supply” page 78
2	I/O terminal board	Main Board	“3.3.1. Wiring diagram for base board terminals” page 42
3	I/O terminal board	Upper card	“3.3.2. Wiring diagram for upper board terminals” page 43
4	CAN expansion bus port	Main Board	“3.1.6. Serial connections” page 38 and “4.5. Serial ports” page 72
5	Serial port 1 (RS 485)	Main Board	“3.1.6. Serial connections” page 38 and “4.5. Serial ports” page 72
6	Serial port 2 (RS 485)	Main Board	“3.1.6. Serial connections” page 38 and “4.5. Serial ports” page 72
7	Display (with 4 status LEDs and 5 Keys)	Main Board	“4.4. Display” page 72
8	Type A USB port	Main Board	“3.1.6. Serial connections” page 38 and “4.5.1. USB Ports” page 73
9	Type B mini USB port	Main Board	“3.1.6. Serial connections” page 38 and “4.5.1. USB Ports” page 73
10	Ethernet port (RJ45)	Main Board	“3.1.6. Serial connections” page 38 and “4.5. Serial ports” page 72
11	Memory card slot	Main Board	“4.7.2. External memory” page 76
12	Battery flap	/	“4.6. Battery flap” page 75
13	Communication module connector	Main Board	“2.9. EVS communication module mounting” page 29

To identify the Base Board and relative components, refer to “1.1.1. EWCM 9000 PRO range” page 14 and “3.2.1. EWCM 9000 PRO base board connectors” page 40.
To identify the Upper Board and relative components, refer to “1.1.1. EWCM 9000 PRO range” page 14 and “3.2.2. EWCM 9000 PRO upper board connectors” page 41.

1.1.4. Main components of EXP 4D PRO

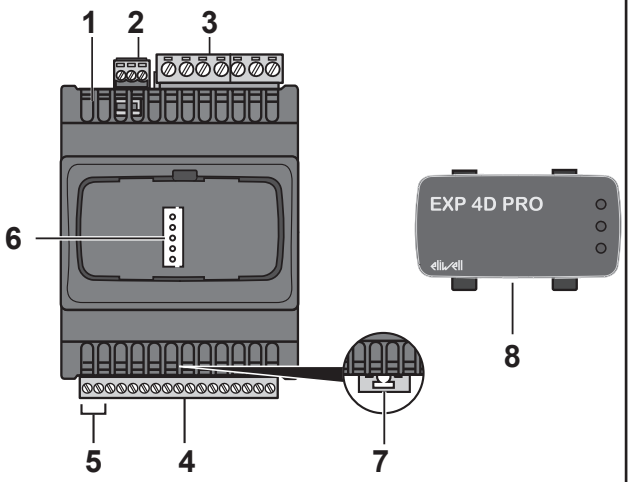

Label	Description
1	4 position microswitches
2	CAN expansion bus port
3	Digital outputs
4	low voltage I/O
5	Power supply
6	TTL service port
7	Hook fastening for 35-mm top hat profiled section guide (DIN rail)
8	Front door

Fig. 4. Main components of EXP 4D PRO

CHAPTER 2
Mechanical installation

2.1. Before starting

Before starting to install your system, read this chapter carefully. Pay particular attention in conforming to any safety information, different electrical requirements and normative standards that would apply to your machine or process in the use of this equipment. The use and application of information contained in this document requires experience in the design and programming of automated control systems. Only the user, the machine manufacturer or the system integrator can be familiar with all the process conditions and therefore only they are able to determine which automation equipment and relative safety devices and interlocks can be used in a correct and efficient manner. When the automation and control equipment and any other relative equipment or software are selected for a particular application, also the applicable local, regional and national standards and regulations must be taken into consideration.

⚠ WARNING

REGULATORY INCOMPATIBILITY

Make sure that all equipment used and the systems designed comply with all applicable local, regional and national laws.

Failure to follow these instructions can result in death, serious injury, or equipment damage.

2.2. Disconnection from the power supply

All options and modules must be assembled and installed before installing the control system on an assembly rail, the panel door or other assembly surface. Before disassembling the equipment, remove the control systems from the assembly rail, plate or panel.

⚠ ⚠ DANGER

HAZARD OF ELECTRIC SHOCK, EXPLOSION OR ELECTRIC ARC

- Disconnect all power from all equipment including connected devices prior to removing any covers or doors, or installing or removing any accessories, hardware, cables, or wires except under the specific conditions specified in the appropriate hardware guide for this equipment.
- Always use a properly rated voltage sensing device to confirm the power is off where and when indicated.
- Replace and secure all covers, accessories, hardware, cables, and wires and confirm that a proper ground connection exists before applying power to the unit.
- Use only the specified voltage when operating this equipment and any associated products.

Failure to follow these instructions will result in death or serious injury.

2.3. Comments concerning programming

The products described in this manual were designed and tested using Eliwell programming, configuration and maintenance software products.

⚠ WARNING

INCORRECT OPERATION OF THE DEVICE

- Only use software approved by Eliwell when using this device.
- Update your application program each time the physical hardware configuration changes.

Failure to follow these instructions can result in death, serious injury, or equipment damage.

2.4. Operating environment

This equipment has been designed to operate outside of any hazardous location, and exclusive of applications that generate, or have the potential to generate, hazardous atmospheres. Only install this equipment in zones known to be free, at all times, of hazardous atmospheres.

⚠ DANGER

POTENTIAL FOR EXPLOSION

- Install and use this equipment in non-hazardous locations only.
- Do not install and use this equipment in applications capable of generating hazardous atmospheres, such as those applications employing flammable refrigerants.

Failure to follow these instructions will result in death or serious injury.

For information concerning the use of control equipment in applications capable of generating hazardous materials, consult your local, regional, or national standards bureau or certification agency.ù

⚠ WARNING

INCORRECT OPERATION OF THE DEVICE

Install and use the device in compliance with the conditions described in Environmental and electrical characteristics.

Failure to follow these instructions can result in death, serious injury, or equipment damage.

2.5. Comments concerning installation

⚠ WARNING

INCORRECT OPERATION OF THE DEVICE

- If there is a risk of injury and/or damage to equipment, use the required safety interlocks.
- Install and use this device in a cabinet with a nominal voltage suited to the place of use.
- For power line and output circuit fuses and connections, comply with local and national regulations corresponding to the nominal current and voltage of the device being used.
- Do not use this equipment in critical safety conditions.
- Do not dismantle, repair or modify the equipment.
- Do not connect wires to the reserved or unused terminals or terminals marked with “No connection (N.C.)”.

Failure to follow these instructions can result in death, serious injury, or equipment damage.

NOTE: Fuses type JDYX2 or JDYX8 are UL recognised and CSA type-approved.
For mechanical dimensions, refer to **“4.9. Mechanical dimensions” page 80**.
EWCM 9000 PRO (HF) devices are designed for assembly on DIN rail, panel or wall.
When handling the equipment use caution to avoid damage caused by electrostatic discharge. In particular the unshielded connectors and in certain cases the open circuit boards are vulnerable to electrostatic discharge.

⚠ WARNING

UNINTENDED EQUIPMENT OPERATION DUE TO ELECTROSTATIC DISCHARGE DAMAGE

Keep the device in the protective packaging until ready for installation.

- The device must only be installed in type-approved casings and/or in points that prevent unauthorised access and provide protection from electrostatic discharge.
- When handling sensitive equipment, use an earthed protective device against electrostatic discharge.
- Before handling the device, always discharge the static electricity from the body by touching an earthed surface or type-approved antistatic mat.

Failure to follow these instructions can result in death, serious injury, or equipment damage.

2.6. Assembly of EWCM 9000 PRO (HF) on DIN rail

The instrument is designed for installation on 8DIN rail (refer to **Fig. 5 on page 22** and **Fig. 12 on page 27**).
Follow the instructions below to install the BASE on DIN rail:

1. move the two locking clip devices outwards (lever with a screwdriver in the compartments).
   In **EWCM 9000 PRO (HF)** only the two bottom locking clip devices can move. Two upper locking clip devices can be ordered separately as an accessory for wall mounting (reference code: **AVA00PMCL0000**).
2. Then install the instrument on the DIN rail.
3. Press the locking clip devices inwards to lock.

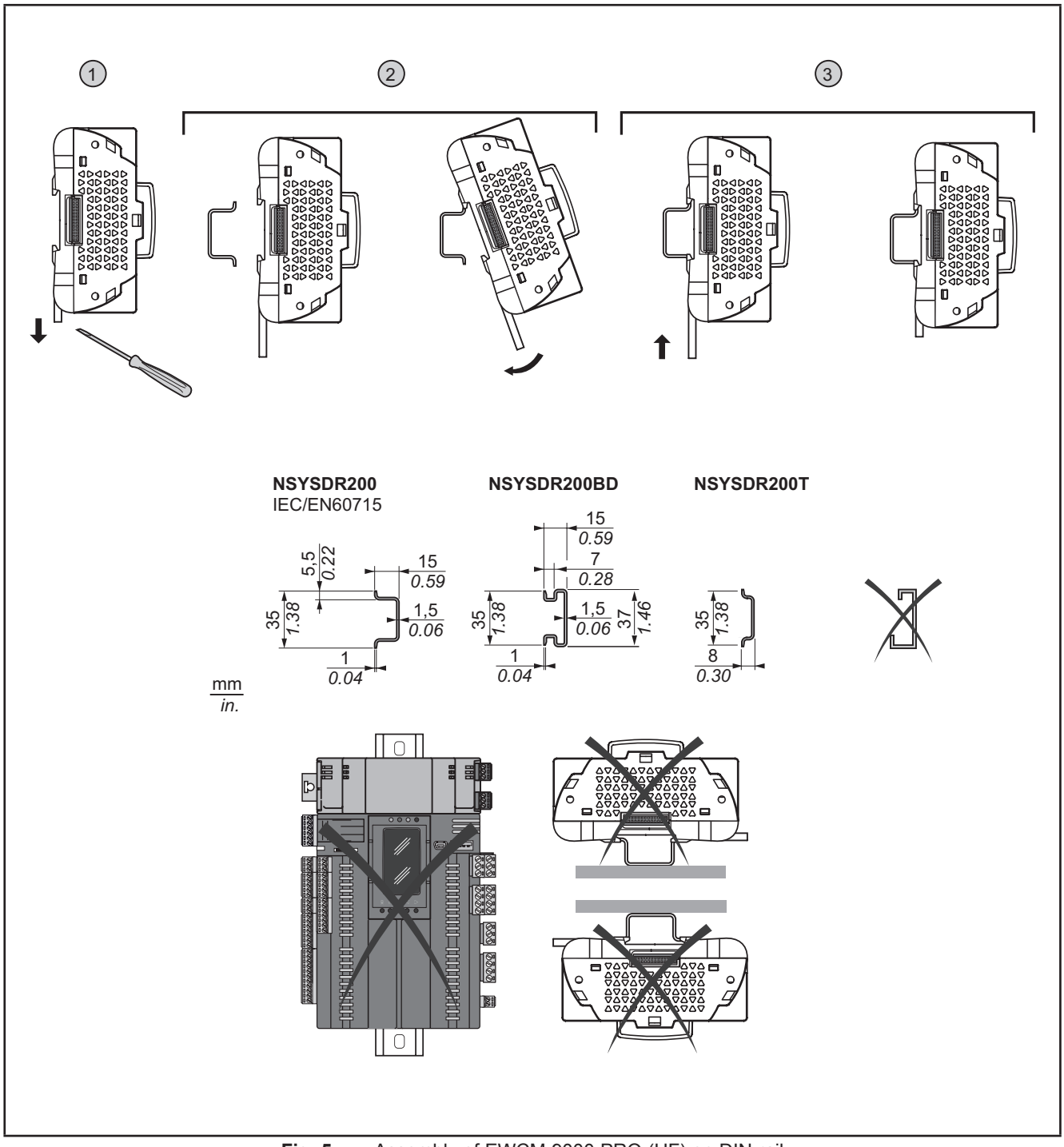

Fig. 5. Assembly of EWCM 9000 PRO (HF) on DIN rail

The **EWCM 9000 PRO (HF) CO2 compressor rack controller** was designed as a class IP20 product and must be installed in a casing. Comply with the indicated distances when installing the product (see **Fig. 6 on page 23**).

There are 3 types of distances:

- The **EWCM 9000 PRO (HF)** and all sides of the cabinet (including the panel door).
- The terminal boards on the **EWCM 9000 PRO (HF)** and the wiring raceways.
  These distances reduce the electromagnetic interference between the controller and the wiring raceways.
- The **EWCM 9000 PRO (HF)** and other heat-generating devices installed in the same cabinet.

⚠ WARNING

INCORRECT OPERATION OF THE DEVICE

- Place the devices dissipating the most heat in the top of the cabinet and ensure suitable ventilation.
- Do not place these devices near or above any devices which could cause overheating.
- Install the device in a point that guarantees the minimum distances from all structures and adjacent equipment as indicated in this document.
- Install all equipment in conformity with the technical specifications given in the respective documentation.

Failure to follow these instructions can result in death, serious injury, or equipment damage.

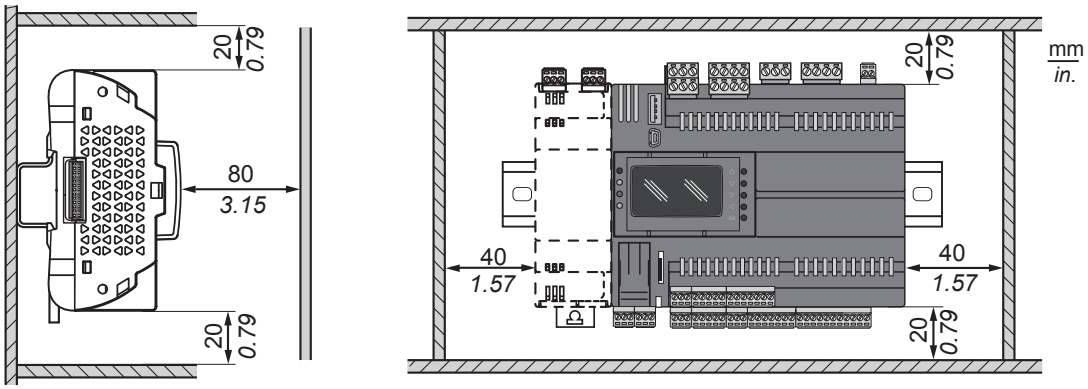

Fig. 6. Distances

2.7. Assembly of EXP 4D PRO on DIN rail

The instrument is designed for installation on a 4DIN rail (refer to **Fig. 7 on page 24**, **Fig. 8 on page 24, Fig. 9 on page 25** and **Fig. 10 on page 25**).
Follow the instructions below to install the BASE on DIN rail:

1. move the two spring docking devices to their standby position (use a screwdriver to press against the relative compartments);
2. Then install the instrument on the DIN rail,
3. pressing on the “spring docking devices” to put them into the locked position.

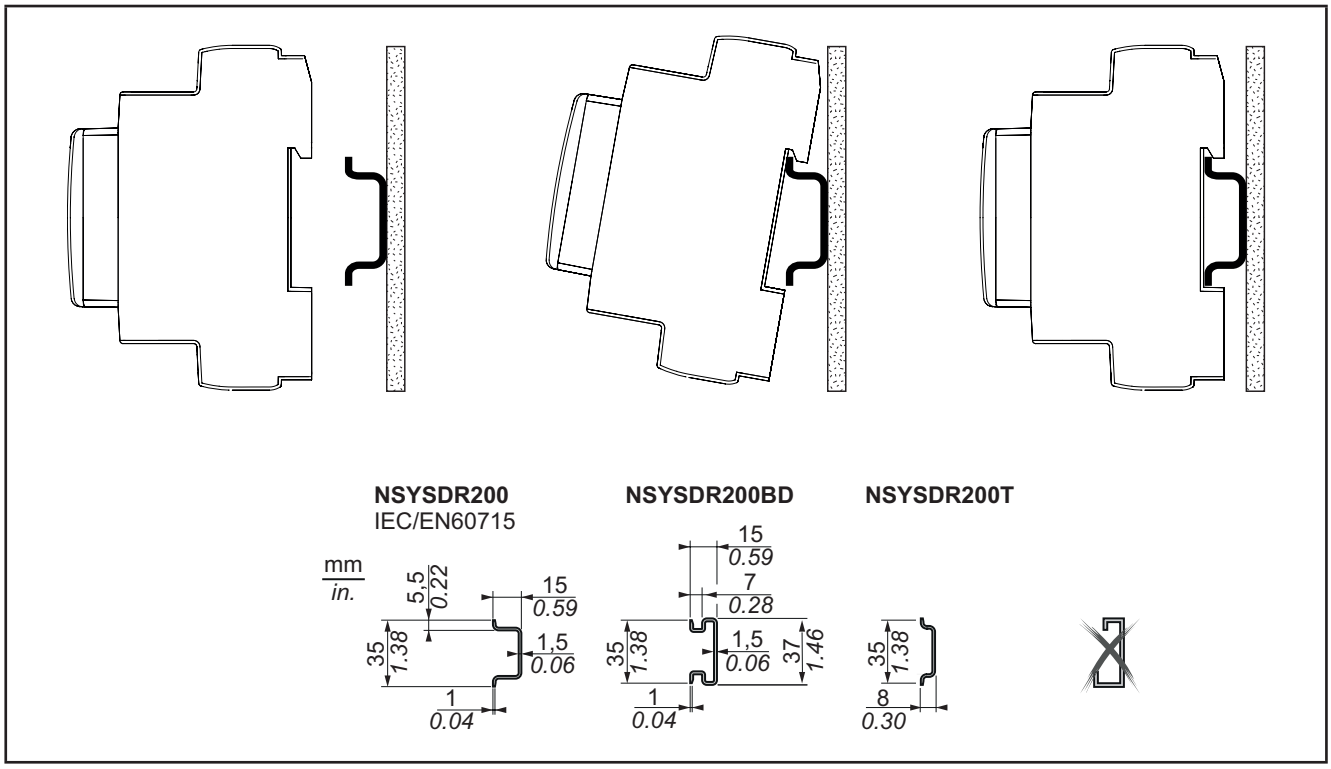

Fig. 7. DIN rail installation – side view

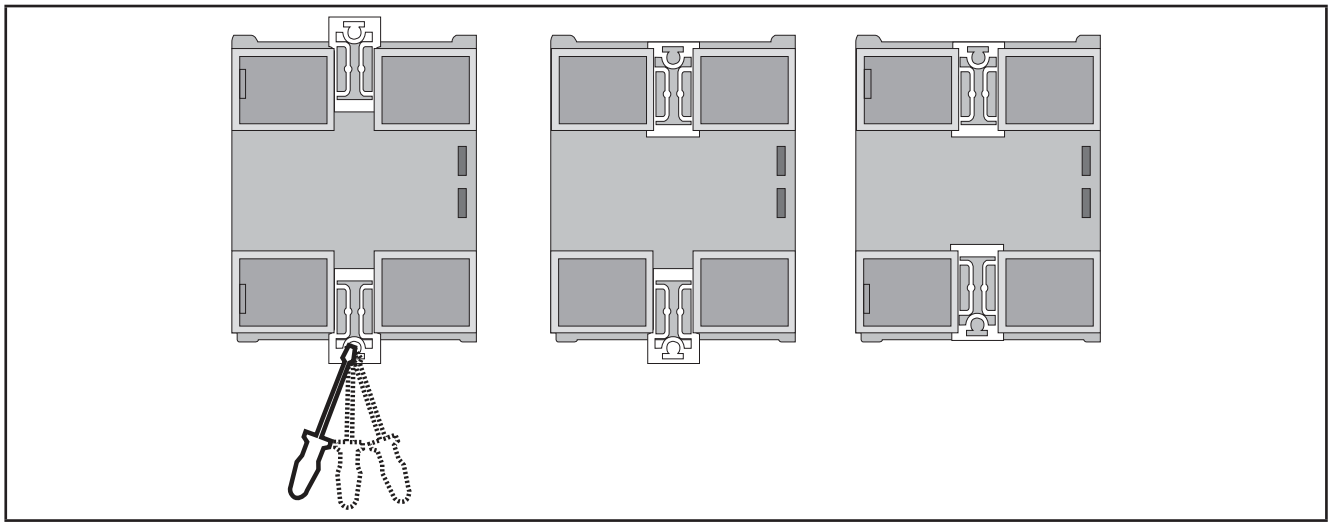

Fig. 8. DIN rail installation - rear view

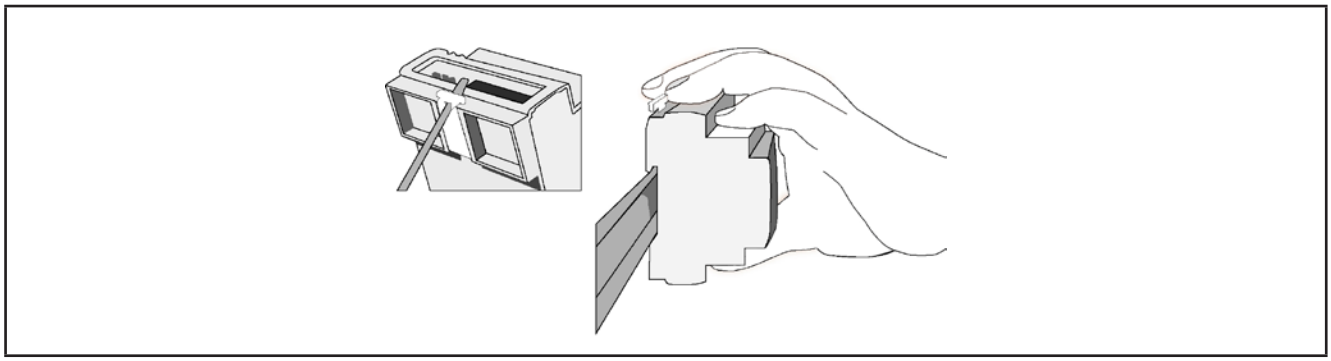

Fig. 9. DIN rail installation – ¾ view

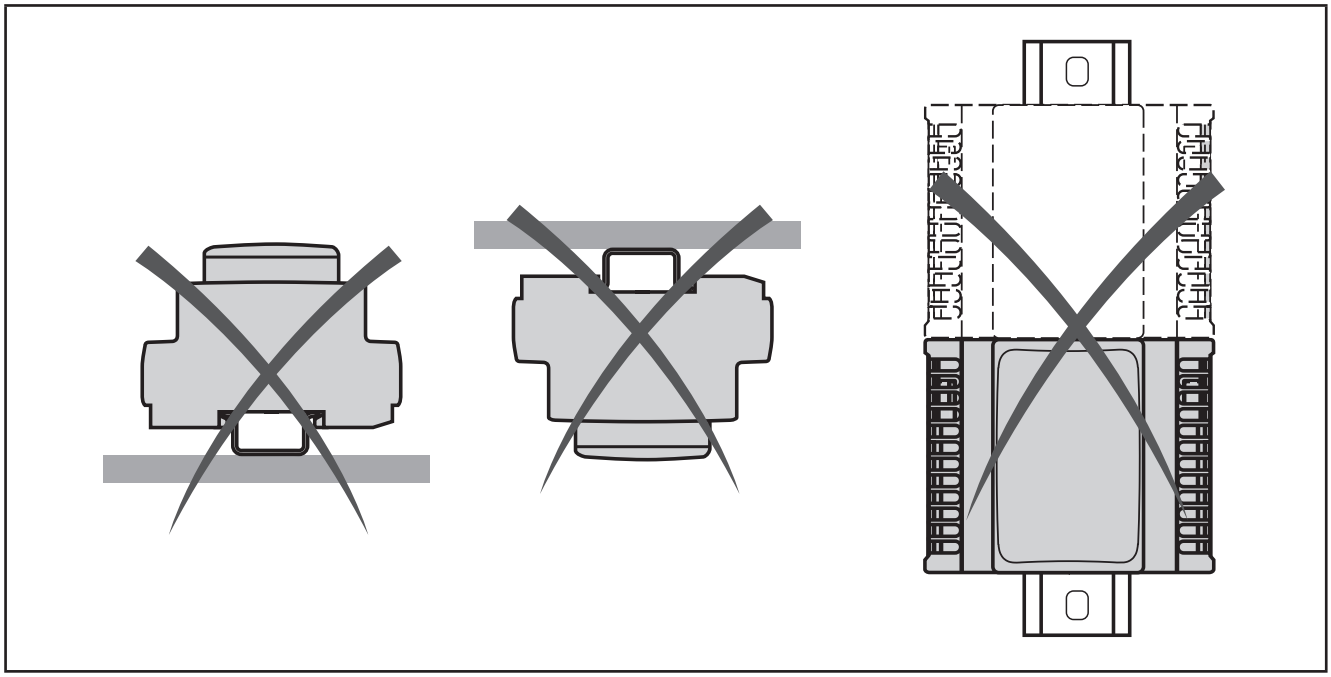

Fig. 10. Installation

The **ECP 4D PRO** logic controller was designed as a class IP20 product and must be installed in a casing. Comply with the indicated distances when installing the product.
There are 3 types of distances:

- The **EXP 4D PRO** controller and all sides of the cabinet (including the panel door).
- The terminal boards on the **EXP 4D PRO** controller and the wiring raceways. These distances reduce the electromagnetic interference between the controller and the wiring raceways.
- The **EXP 4D PRO** controller and the other heat-generating devices installed in the same cabinet.

⚠ WARNING

INCORRECT OPERATION OF THE DEVICE

- Place the devices dissipating the most heat in the top of the cabinet and ensure suitable ventilation.
- Do not place these devices near or above any devices which could cause overheating.
- Install the device in a point that guarantees the minimum distances from all structures and adjacent equipment as indicated in this document.
- Install all equipment in conformity with the technical specifications given in the respective documentation.

Failure to follow these instructions can result in death, serious injury, or equipment damage.

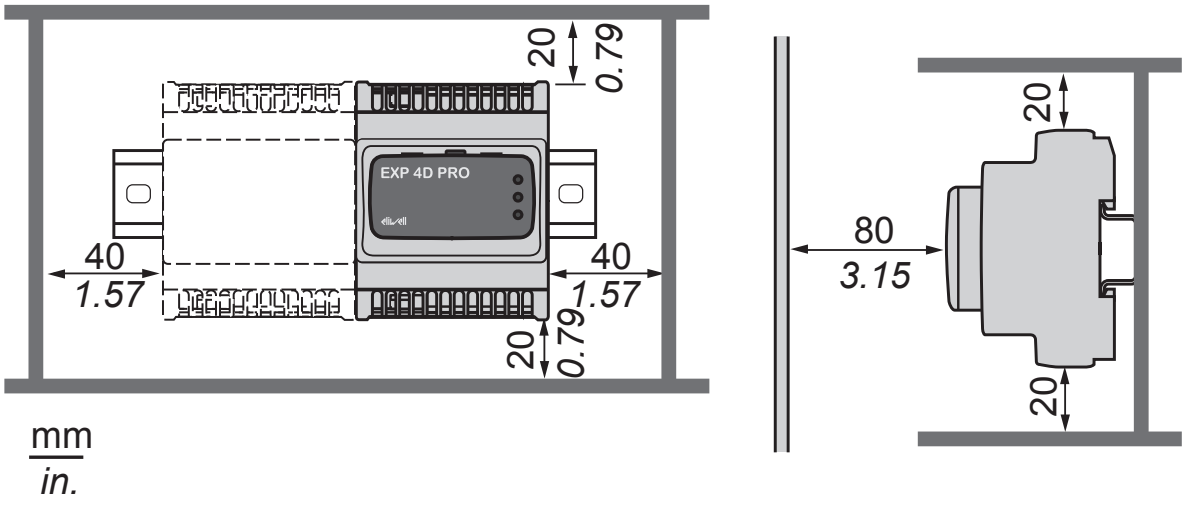

Fig. 11. Distances

2.8. Panel assembly of EWCM 9000 PRO (HF)

The device is also designed for panel installation (see **Fig. 12 on page 27** and **Fig. 13 on page 28**).

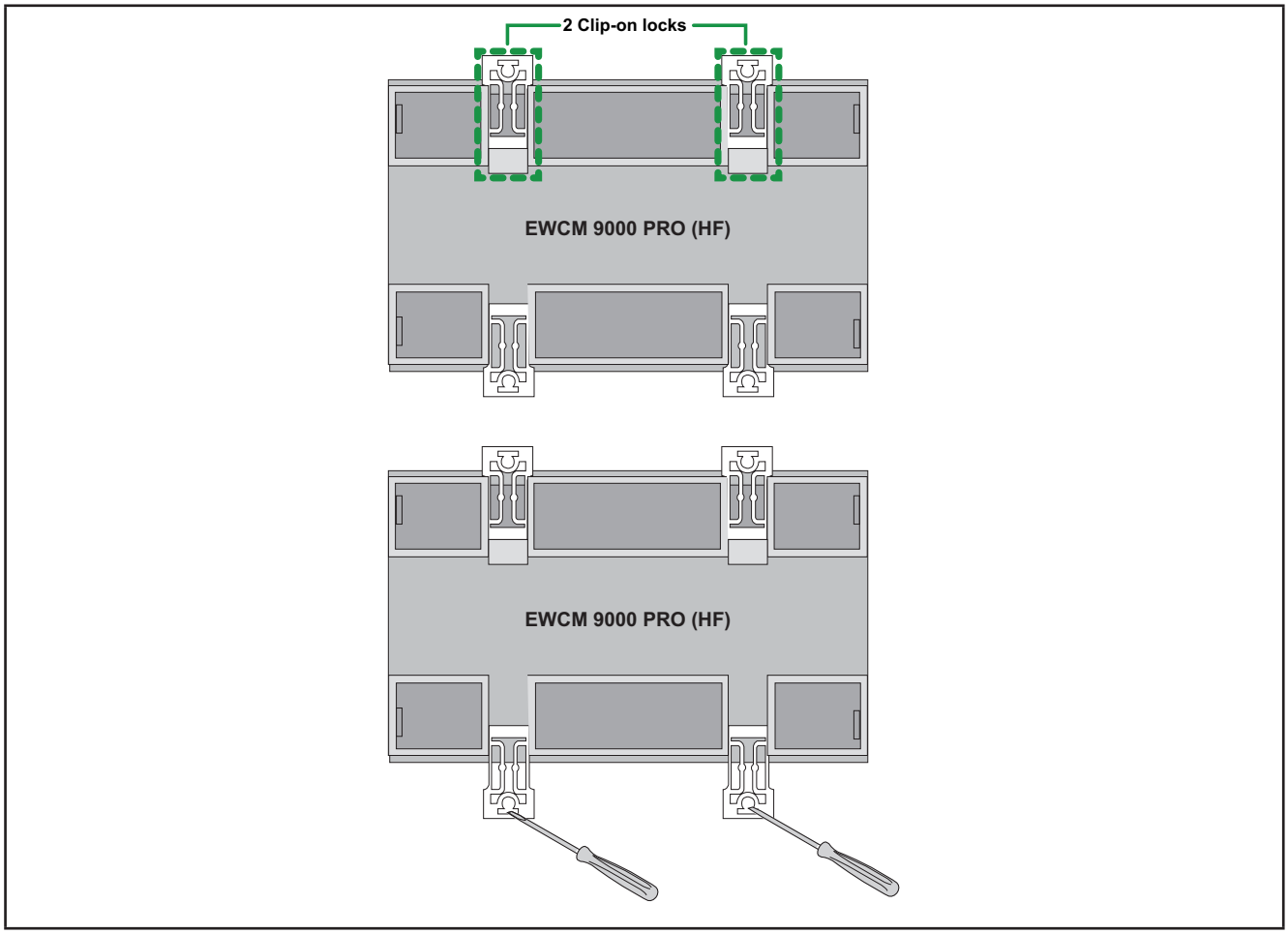

Fig. 12. Details of locking clip devices

For panel installation proceed as follows:

1. Drill four holes in the panel (for the distance between holes and the relative hole diameter, see Fig. 13 on page 28).
2. Take two locking clip devices from the product package.
3. Install two locking clip devices in the upper part of the EWCM 9000 PRO (HF).
4. Move the locking clip devices outwards using a screwdriver.
5. Align the four locking clip devices in the EWCM 9000 PRO (HF) with the four holes drilled in the panel.
6. Fix the EWCM 9000 PRO (HF) with the screws.

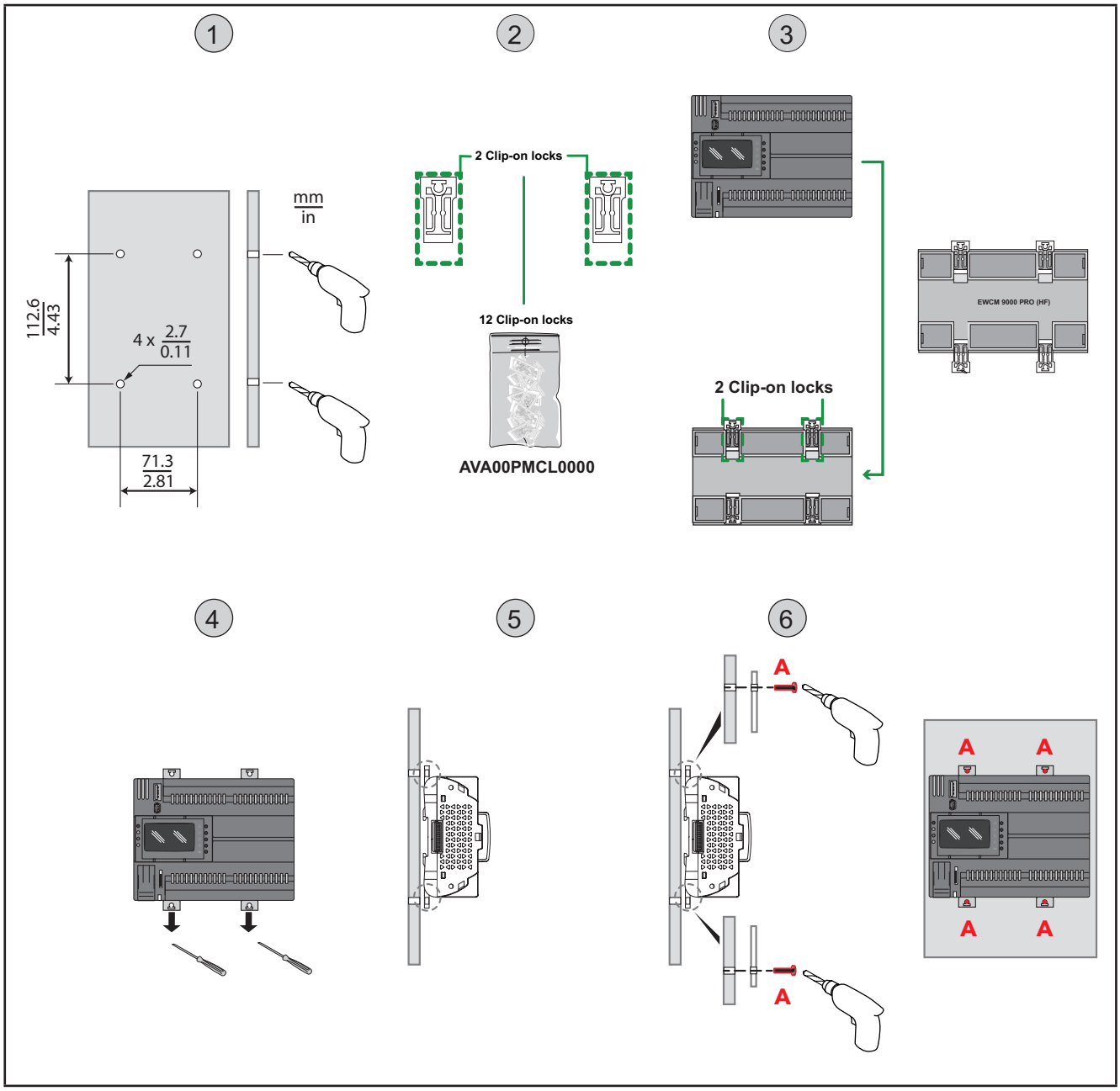

Fig. 13. EWCM 9000 PRO panel mounting

2.9. EVS communication module mounting

EVS communication modules are 2DIN modules that can be connected to a **EWCM 9000 PRO** controller (see **Fig. 14 on page 29**) to increase the number and/or types of communication ports.

Before mounting the **EVS** module on the **EWCM 9000 PRO** controller, verify that there are no cylindrical plastic cones on the right-hand side of the **EVS** module.
Otherwise, when using the previous version of the product, remove only one cone on the upper right-hand side of the **EVS** module using pliers or another suitable tool.

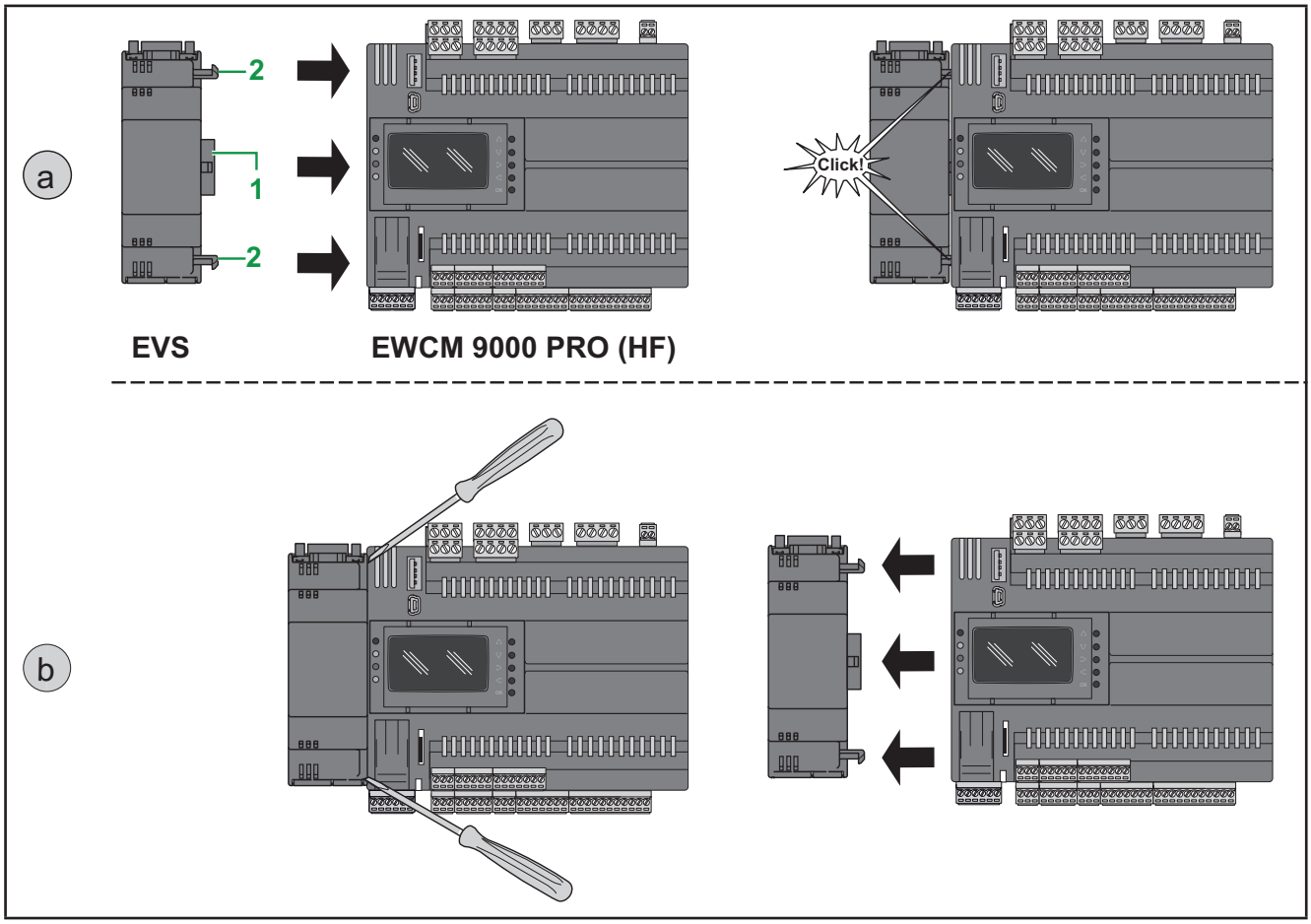

Fig. 14. Assembly (a) / Removal (b) of the EVS communication modules

(a) Connect the **EVS** module to the **EWCM 9000 PRO (HF)** controller:

1. via the communication module connector (see element 1 in **Fig. 14 on page 29**),
2. with two fixing hooks (see elements 2 in **Fig. 14 on page 29**) to which the communication module is fixed.

(b) To remove the **EVS** module from the **EWCM 9000 PRO (HF)**, lever the cylindrical plastic hooks fixed to the **EWCM 9000 PRO (HF)** controller with a screwdriver.

Follow the instructions below to install the BASE on DIN rail:

1. Move the locking clip devices outwards (use a screwdriver).
2. Install the **EWCM 9000 PRO (HF)** with the **EVS** module on the DIN rail.
3. Press the locking clip devices inwards.

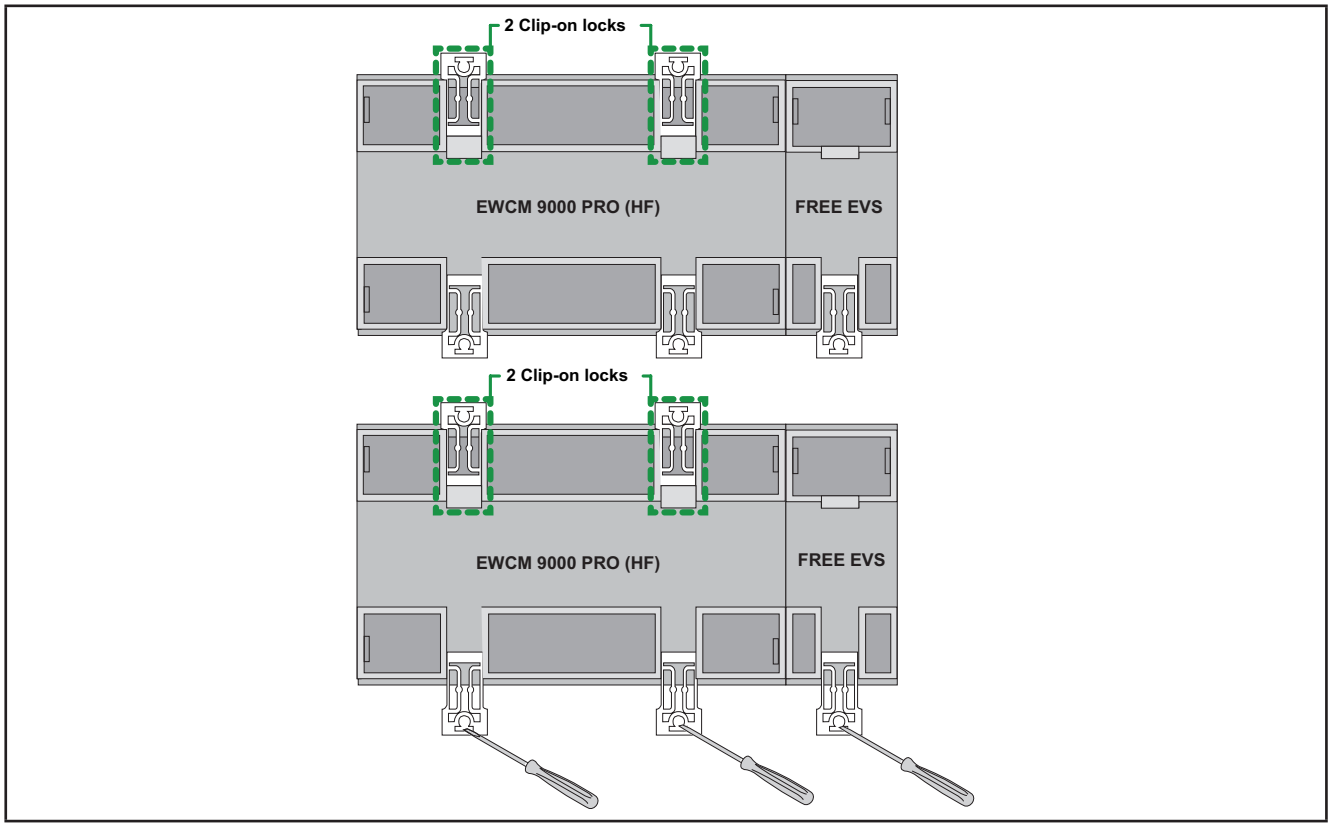

Fig. 15. Details of locking clip devices

2.10. Assembly of the EVK PRO DISPLAY

The instrument is designed for panel mounting (refer to **Fig. 16 on page 31**) or wall mounting (refer to **Fig. 17 on page 32**) using the special accessories, which must be ordered separately.

2.10.1. Panel mounting

For panel assembly, proceed as follows:

1. Make a rectangular aperture measuring 138 x 68 mm (5.43 x 2.68 in) in the panel.
2. Make 2 or 4 holes diameter 2.7 mm (0.11 in) spaced as shown (refer to **Fig. 16 on page 31**).
3. Insert the device, fixing it with the screws.
4. Then press the front of the **EVK PRO DISPLAY** to close.

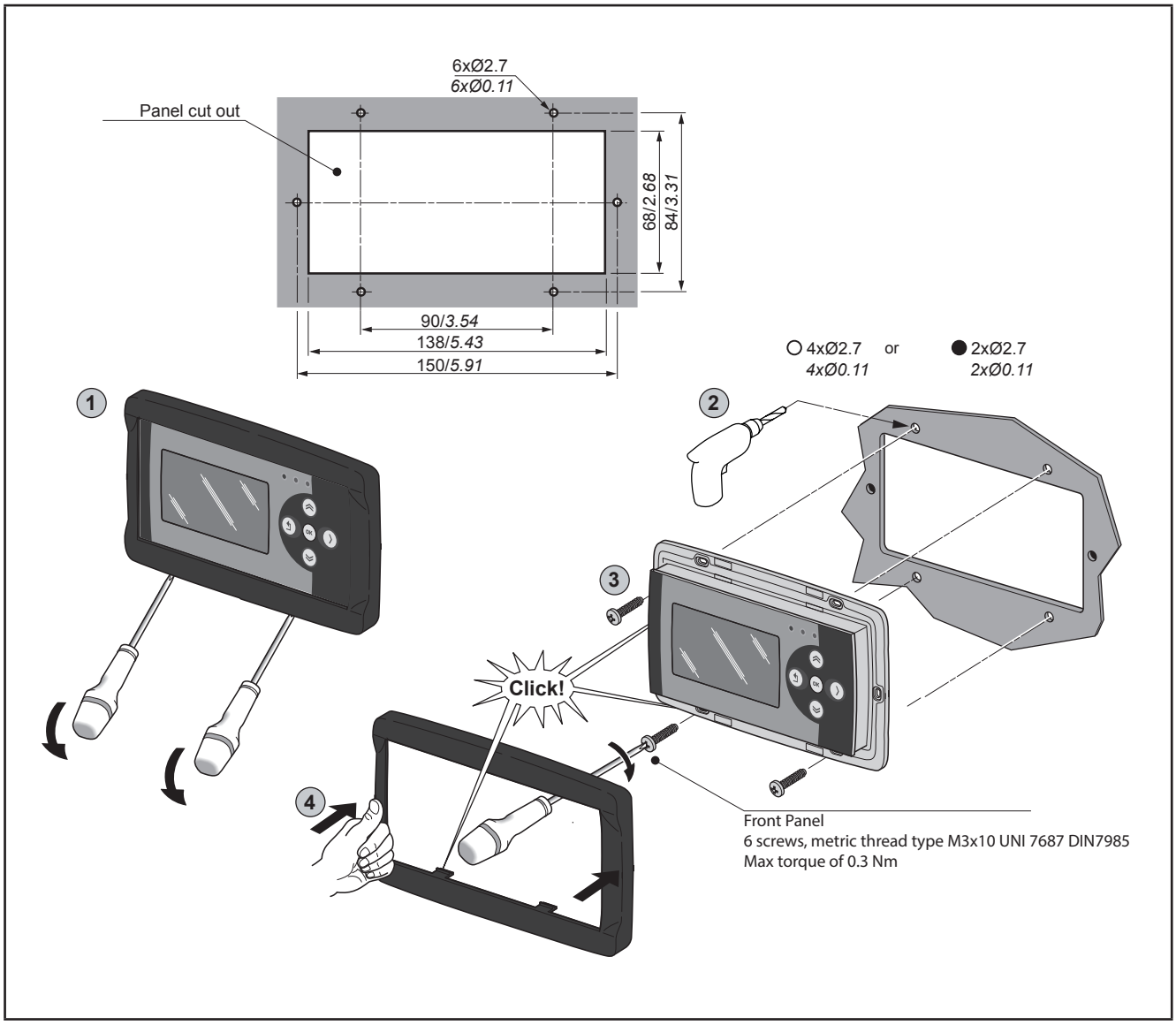

Fig. 16. Assembly of the EVK PRO DISPLAY

Front Panel
6 screws, metric thread type M3x10 UNI 7687 DIN7985
Maximum tightening torque 0.3 Nm

2.10.2. Accessories for wall mounting

The instrument is also designed for wall mounting (refer to **Fig. 17 on page 32**) using the special accessories, which must be ordered separately.

1. Drill 4 x 4.2 mm (0.16 in) diameter holes, spaced as described in the instructions, to fix the backplate.
2. Alternatively, remove the 2 pre-formed flaps and use the side slots (one at the bottom and one at the top) to avoid having to make a rectangular aperture in the wall.
3. Insert the backplate and fix with the screws.
4. Insert the device, fixing it with the screws.
5. Then press the front of the **EVK PRO DISPLAY** to close.

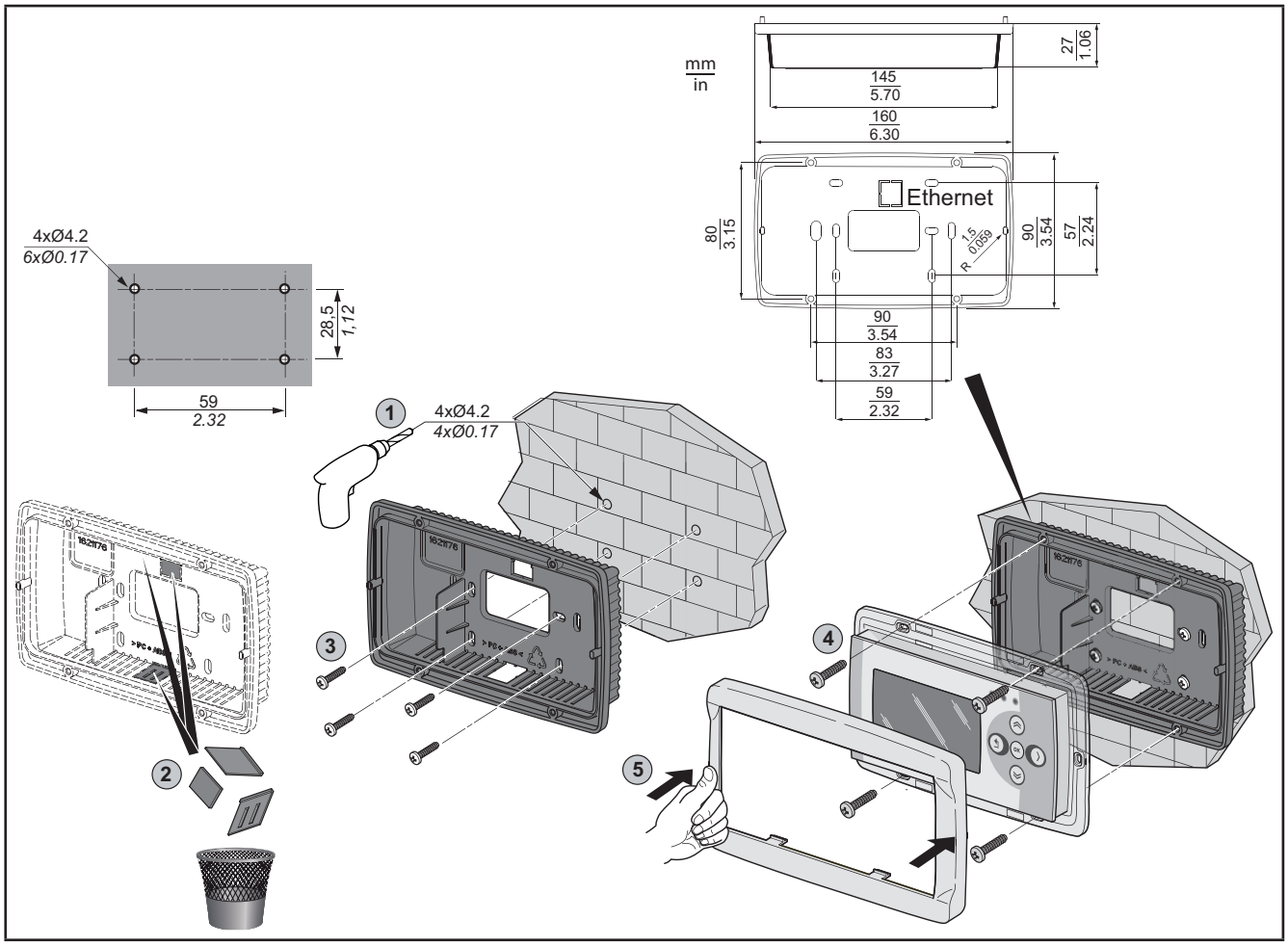

Fig. 17. Accessories for wall mounting

Front Panel
6 screws, metric thread type M3x10 UNI 7687 DIN7985
Maximum tightening torque 0.3 Nm

Model	Reference
EVA00WMRC0001	Black backplate kit for wall mounting
4 backplates per package.	

CHAPTER 3
Electrical connections

3.1. Best wiring practices

The following information describes the guidelines for wiring and the best practices to follow when using the **EWCM 9000 PRO CO2 compressor rack controllers**.

⚠ ⚠ DANGER

HAZARD OF ELECTRIC SHOCK, EXPLOSION OR ELECTRIC ARC

- Disconnect all power from all equipment including connected devices prior to removing any covers or doors, or installing or removing any accessories, hardware, cables, or wires except under the specific conditions specified in the appropriate hardware guide for this equipment.
- Always use a properly rated voltage sensing device to confirm the power is off where and when indicated.
- Replace and secure all covers, accessories, hardware, cables, and wires and confirm that a proper ground connection exists before applying power to the unit.
- Use only the specified voltage when operating this equipment and any associated products...

Failure to follow these instructions will result in death or serious injury.

⚠ WARNING

LOSS OF CONTROL

- The control system designer must consider the potential failure modes of the control circuit and, for some critical control functions, provide a means for reaching a safe condition during and after a circuit failure. Examples of critical control functions are the emergency stop and end of travel stop, power supply cut-off and restart.
- Separate or redundant control circuits must be provided for critical control functions.
- The system control circuits can include communication connections. Keep in mind the implications of transmission delays or sudden connection failures.
- Comply with all the standards regarding accident protection and the local applicable safety directives.(1)
- Every implementation of this device must be tested individually and completely in order to verify its proper operation before putting it in service.

Failure to follow these instructions can result in death, serious injury, or equipment damage.

(1) For additional information, refer to the standards NEMA ICS 1.1 (latest edition), “Safety Guidelines for the Application, Installation, and Maintenance of Solid State Control” and NEMA ICS 7.1 (latest edition) “Safety Standards for Construction and Guide for Selection, Installation and Operation of Adjustable-Speed Drive Systems” or to equivalent standards that regulate your particular location.

3.1.1. Wiring guidelines

For wiring **EWCM 9000 PRO CO2 compressor rack controllers** comply with the following standards:

- Make connections as short as possible and do not wind them around electrically connected parts.
- Verify that the operating conditions and environment comply with the specification values.
- Use wires of the correct diameter and suited to the voltage and current requirements.
- Use copper conductors (obligatory).

⚠ WARNING

INCORRECT OPERATION OF THE DEVICE

- Use twisted-pair shielded wires for all high-speed I/O, analogue I/O and communication signals. (1)
- Earth the wire shields for all analogue I/O, high-speed I/O and communication signals in a single point. (1)(2)
- Lay the communication and I/O cables separately from the power cables.

Failure to follow these instructions can result in death, serious injury, or equipment damage.

(1) If shielded wires cannot be used for these connections, the electromagnetic interference may deteriorate the signal. Deteriorated signals can result in the controller, modules or attached equipment operating incorrectly.

(2) Earthing in several points is permitted if the connections are made to an equipotential earth surface that is sized to avoid damage to the cable shields in the event of a short circuit in the power supply.

NOTE: The surface temperatures can exceed 60 °C. Lay the main wiring (power wires) separately from the secondary wiring (very low voltage wire coming from intermediate power sources). Where this is not possible, double insulation is required in the form of cable recesses or raceways.

3.1.2. Rules for screw-type terminal boards

The table below illustrates the types of cables and wire sections for a screw-type terminal board with **3.50 spacing**:

mm / in. 9 / 0.35								
mm²	0.14…1.5	0.14…1.5	0.25…1.5	0.25…0.5	2 x 0.08…0.5	2 x 0.08…0.75	2 x 0.25…0.34	2 x 0.5
AWG	*26…16*	*26…16*	*22...16*	*22...20*	*2 x 28…20*	*2 x 28…20*	*2 x 24…22*	*2 x 20*

Ø 2,5 mm (*0.1 in.*)	C	N•m	0.22...0.25
		lb-in	*1.95...2.21*

Fig. 18. Spacing 3.50 mm (0.14 in.)

The table below illustrates the types of cables and wire sections for a screw-type terminal board with **5.08** or **5.00** spacing:

mm / in. 7 / 0.28								
mm²	0.2…2.5	0.2…2.5	0.25…2.5	0.25…2.5	2 x 0.2…1	2 x 0.2…1.5	2 x 0.25…1	2 x 0.5...1.5
AWG	*24…14*	*24…14*	*22...14*	*22...14*	*2 x 24…18*	*2 x 24…16*	*2 x 22…18*	*2 x 20...16*

Ø 3,5 mm (*0.14 in.*)	C	N•m	0.5...0.6
		lb-in	*4.42...5.31*

Fig. 19. Spacing 5.00 mm (0.197 in.) or 5.08 mm (0.20 in.)

⚠ ⚠ DANGER

LOOSE WIRING CAN RESULT IN ELECTRIC SHOCK

Tighten the connections in compliance with the technical specifications for pairs.

Failure to follow these instructions will result in death or serious injury.

⚠ DANGER

FIRE HAZARD

- Use only the correct wire sections for current capacity of the I/O channels and the electrical power.
- For wiring an 2 A relay output use conductors with section of at least 0.5 mm^2 (AWG 20) with a nominal temperature of 80 °C (176 °F).
- For wiring an 3 A relay output use conductors with section of at least 1.5 mm^2 (AWG 16) with a nominal temperature of 80 °C (176 °F).
- For common relay output conductor wiring of 8 A or wiring relay outputs with currents greater than 3 A, use conductors with section of at least 2.0 mm^2 (AWG 14) and nominal temperature of at least 80 °C (176 °F).

Failure to follow these instructions will result in death or serious injury.

3.1.3. Protecting the outputs from damage from inductive loads

If the controller or module has SSR outputs, these types of outputs can cope with up to 260 Vac.
These outputs have an RC circuit (snubber) and a built-in varistor. The varistor is sized for maximum load current 0.5 A.
These SSR outputs do not support capacitive loads and have a minimum working voltage of 75 Vac and minimum load current of 20 mA.

If the controller or module has relay outputs, these types of outputs can cope with up to 250 Vac.
Damage from inductive loads to this type of outputs can cause the contacts to weld and lead to the loss of control.
Each inductive load applied to the relay outputs must include a protective device such as a peak limiter or RC circuit.
These relays do not support capacitive loads.

⚠ WARNING

RELAY OUTPUTS WELDED TO CLOSED POSITION

- Always protect the relay outputs from damage resulting from alternating current inductive loads using a suitable external protective device or circuit.
- Do not connect the relay outputs to capacitive loads.

Failure to follow these instructions can result in death, serious injury, or equipment damage.

Depending on the load a protection circuit may be required for controller outputs and certain modules.
Inductive load switching may create voltage impulses that damage or short circuit or reduce the life of the output devices.

⚠ CAUTION

DAMAGE TO OUTPUT CIRCUITS DUE TO INDUCTIVE LOADS

Use an external protective device or circuit able to reduce the risks caused by voltage impulses in the switching of inductive loads.

Failure to follow these instructions can result in injury or equipment damage.

Choose a protection circuit from the following diagrams according to the electrical power used. Connect the protection circuit to the outside of the controller or relay output module.

Protection circuit A
This protection circuit uses a snubber and can be used for alternating current circuits.
The snubber must be compatible with the type of charge and the RMS voltage of the snubber must be +10% higher than the charge voltage (for example: with a charge working at 250 Vac, the snubber must have a minimum voltage of 275 Vac)
NOTE. With the SSR the snubber is built in.

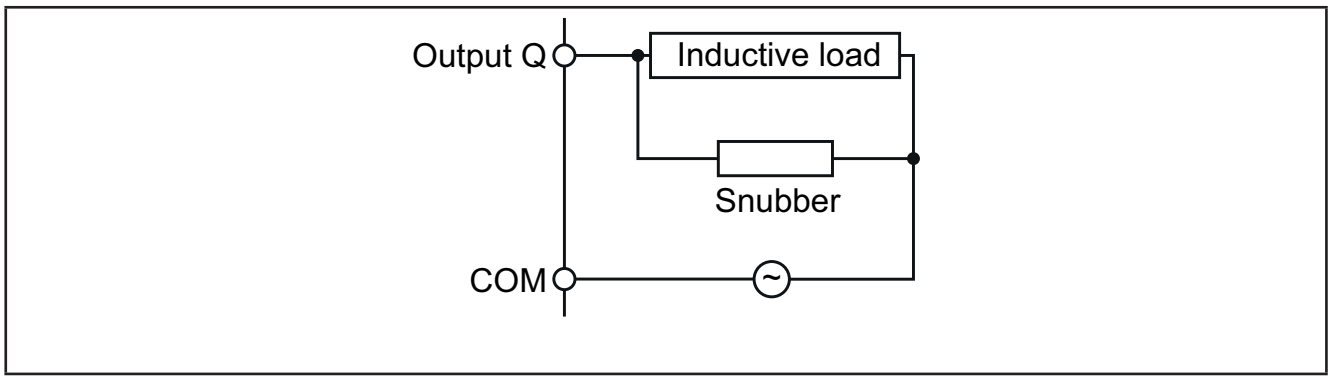

Fig. 20. Protection circuit A

Protection circuit B
this protection circuit uses a varistor and can be used for alternating current circuits.
In applications in which the inductive load is frequently and/or rapidly switched on and off, verify that the maximum continuous energy (U) of the varistor is 20% or more higher than the peak load energy, and the clamping voltage on the varistor is not less than 1.6 times the charge voltage.
NOTE. With the SSR the varistor is built-in with the characteristics described at the start of this section.

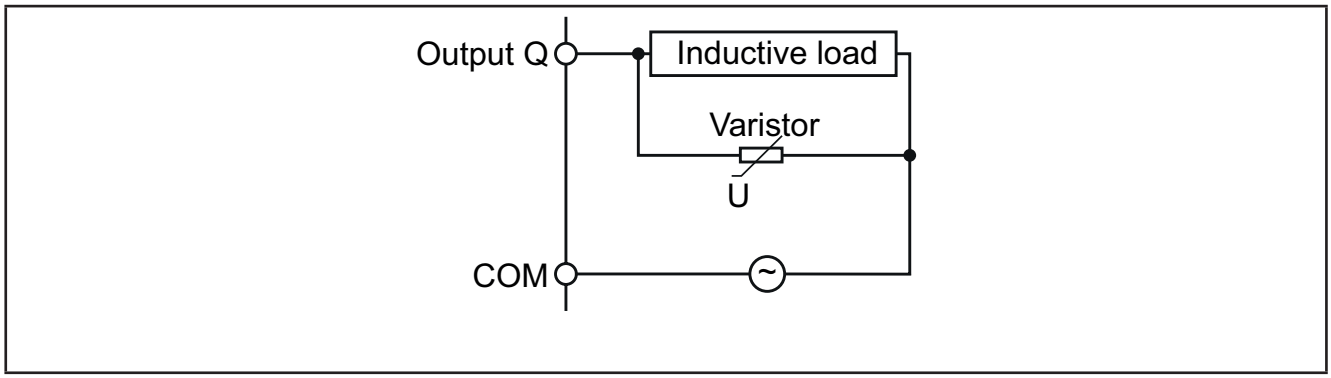

Fig. 21. Protection circuit B

NOTE: Place the protection devices as close as possible to the load.

3.1.4. Specific considerations for handling

When handling the equipment use caution to avoid damage caused by electrostatic discharge. In particular the unshielded connectors and in certain cases the open circuit boards are vulnerable to electrostatic discharge.

⚠ WARNING

UNINTENDED EQUIPMENT OPERATION DUE TO ELECTROSTATIC DISCHARGE DAMAGE

Keep the device in the protective packaging until ready for installation.

- The device must only be installed in type-approved casings and/or in points that prevent unauthorised access and provide protection from electrostatic discharge.
- When handling sensitive equipment, use an earthed protective device against electrostatic discharge.
- Before handling the device, always discharge the static electricity from the body by touching an earthed surface or type-approved antistatic mat.

Failure to follow these instructions can result in death, serious injury, or equipment damage.

3.1.5. Analogue inputs-probes

The temperature probes do not feature any connection polarity and can be extended using normal bipolar cable.

⚠ WARNING

UNINTENDED OPERATION OF EQUIPMENT

- Apply the electrical power supply to all device powered externally having switched on the power to the CO2 compressor rack controllers EWCM 9000 PRO.
- The signal cables (probes, digital inputs, communication, and relative power supplies) of the device must be laid separately from the power cables.

Failure to follow these instructions can result in death, serious injury, or equipment damage.

NOTICE

INOPERABLE DEVICE

Before switching on the electrical power, verify all the wiring connections.

Failure to follow these instructions can result in equipment damage.

NOTE: Extending the probes affects the electromagnetic compatibility (EMC) of the device.
NOTE: Probes requiring a specific polarity must respect the correct connection polarity.

3.1.6. Serial connections

The **EWCM 9000 PRO (HF) CO2 compressor rack controller** has the following on-board communication ports:

- CAN expansion bus
- 2 x RS 485
- Ethernet
- USB (type A)
- Mini USB (type B)

Pay special attention when connecting serial lines. Incorrect wiring may cause the device to stop working.

NOTICE

INOPERABLE DEVICE

- Do not connect apparatus which communicates via RS-485 serial port to CAN expansion bus terminals.
- Do not connect apparatus which communicates via CAN expansion bus to RS 485 terminals.

Failure to follow these instructions can result in equipment damage.

Via the **EVS** communication modules other serial ports are available for integration in industrial systems and BMS.
The serial ports of the **EWCM 9000 PRO (HF) CO2 compressor rack controller** are defined “on-board” (OB) while those on the **EVS** are called communication modules (the code PI is the abbreviation of the term “Plug In”).

3.1.6.1. CAN expansion bus

- Use a “**twisted pair**” shielded cable with two conductors with section 0.5 mm^2 (AWG 22), plus a sheath, such as, for example, a Belden cable version 3105A (characteristic impedance 120 Ω) with PVC sleeve, nominal capacity between conductors 36 pF/m, nominal capacity between conductor and shield 68 pF/m.
- For laying wires, comply with the indications given in standard EN 50174 on information technology wiring. Extra care must be taken in separating data transmission circuits from power lines.
- The network must have BUS DAISY CHAIN topology and must have 120 Ohm 1/4 W termination resistances between the “+” and “-” terminals on each of the two ends of the BUS or enable those on the controllers.
- **EWCM 9000 PRO-HF** The maximum distance depends on the communication speed in set baud (see following table).

kb/s (kbps)	CAN on-board (m) EWCM 9000 PRO-HF	CAN communication module (m)
50	1000	1000
125	500	500
250	200	250
500	30	60

NOTE. For the **EWCM 9000 PRO** version the default is 500 Kb/s and cannot be edited

The CAN expansion bus is used to communicate with the **EVK PRO DISPLAY graphic display terminal** and the **EXP 4D PRO expansion** terminal.

Pay special attention when connecting serial lines. Incorrect wiring may cause the device to stop working.

3.1.6.2. RS 485

- Use a shielded and “twisted-pair” cable specific to RS 485 for example BELDEN 9842 cable. For laying wires, comply with the indications given in standard EN 50174 on information technology wiring. Extra care must be taken in separating data transmission circuits from power lines.
- **NOTE**. For non-critical applications (in accordance with the guidelines of standard ANSI TIA/EIA RS- 485-A) using a cable with 2 conductors plus braiding, connect the braining to the G terminal on the RS-485.
- The maximum length of the RS-485 network connected directly to the device is 1200 m (in compliance with ANSI TIA/EIA RS-485-A and ISO 8482:1987 (E)).
- The maximum number of devices (unit loads in accordance with ANSI TIA/EIA RS- 485-A and ISO 8482:1987 (E)) which can be connected on the same BUS is 32. For larger numbers of devices, use suitable signal repeaters.
- The Modbus protocol can manage up to 247 devices.
- The network must have BUS DAISY CHAIN topology and must have 120Ohm 1/4W termination resistances between the “+” and “-” terminals on each of the two ends of the BUS or enable those on the controllers.
- The RS 485 physical level can be used for Modbus SL communication, as well as BACnet MS/TP.
- The concurrent communication of different protocols on the same serial port is NOT permitted.

Pay special attention when connecting serial lines. Incorrect wiring may cause the device to stop working.

NOTICE

INOPERABLE DEVICE

Do not communicate simultaneously via Modbus SL and BACnet MS/TP protocols on the same serial port.

Failure to follow these instructions can result in equipment damage.

3.1.6.3. Ethernet

The Ethernet connection is used for **EWCM 9000 PRO (HF)** communication on an Ethernet network using TCP/IP protocol. The connection allows:

- the connection between different controllers and/or applications exchanging variables and/or parameters (network).
- the connection of a monitoring system using the Modbus TCP protocol.
- **EWCM 9000 PRO:** the connection of a DeviceManager PRO system.
- **EWCM 9000 PRO-HF:** the connection of an IEC 61131-3 development system **FREE Studio (v.3.9.1.2 or greater), FREE Studio Plus (v.1.0.0)**.
- **EWCM 9000 PRO-HF:** the connection of a device on a BACnet/TCP network, with B-AAC profile.

The concurrent communication of different protocols using the same Ethernet port is permitted.

The Ethernet connector shield is internally connected to the earth of the appliance and therefore to the reference of the input and output channels.

For more information refer to **“4.5.2. Ethernet Port” page 74**.

3.1.6.4. USB

On the upper left hand side of the controller (seen from the front) (see **Fig. 47 on page 73**) there are 2 USB connectors.

- The type A USB is a connector for a USB memory stick.
- The type B mini USB connector is used for programming.

For more information refer to **“4.5.1. USB Ports” page 73**.

3.2. Connectors

The **EWCM 9000 PRO (HF)** range (**Fig. 2 on page 16**) consists of a “Base Board” and an “Upper Board”.
For the connectors available on the “Base card”, refer to **“3.2.1. EWCM 9000 PRO base board connectors” page 40**.
For the connectors available on the “Upper card”, refer to **“3.2.2. EWCM 9000 PRO upper board connectors” page 41**.
The labels of the I/O and ports are marked on the casing of the **EWCM 9000 PRO (HF)** (see **Fig. 22 on page 40** and **Fig. 23 on page 41**).

3.2.1. EWCM 9000 PRO base board connectors

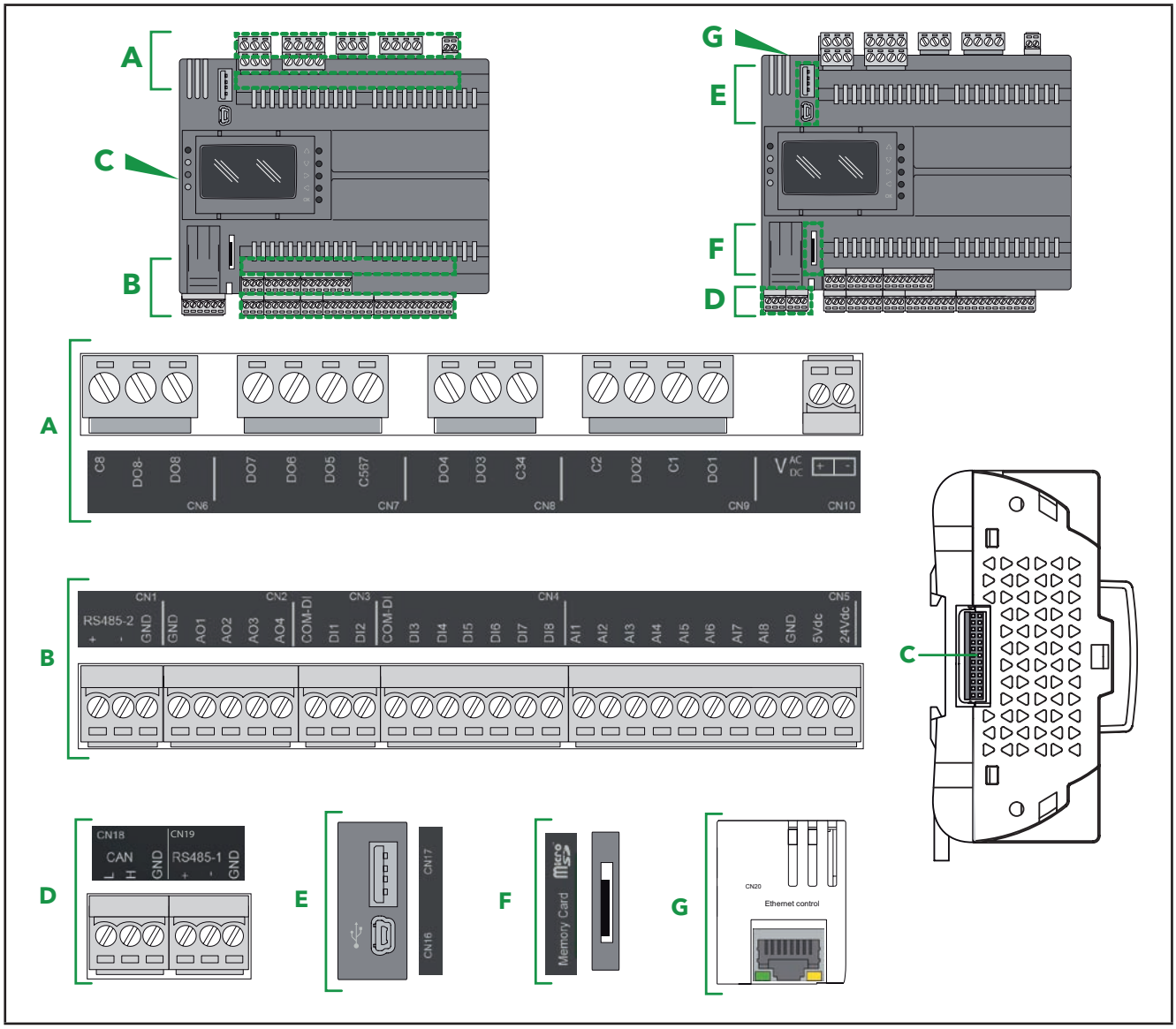

Fig. 22. EWCM 9000 PRO (HF) base board connectors

3.2.2. EWCM 9000 PRO upper board connectors

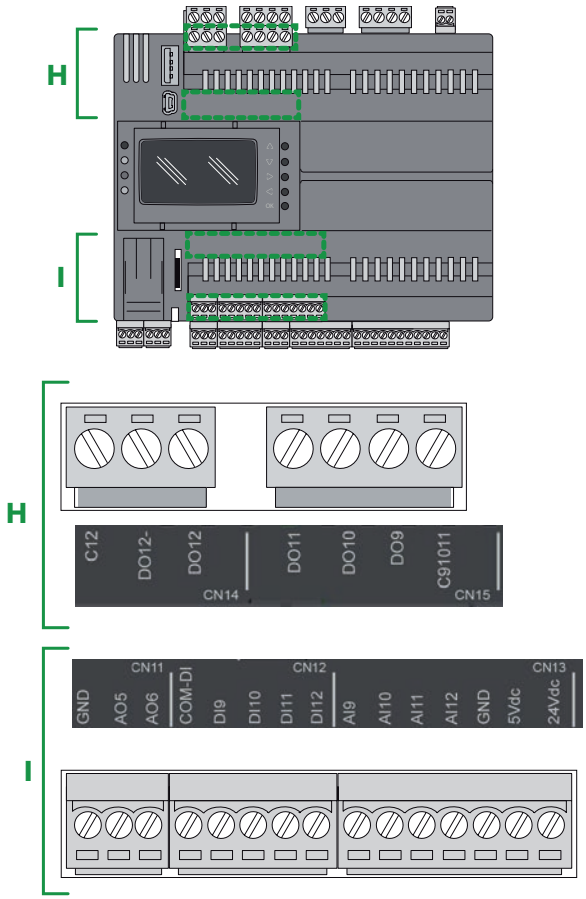

Fig. 23. EWCM 9000 PRO (HF) upper board connectors

3.3. EWCM 9000 PRO (HF) wiring diagram

Incorrect wiring will cause irreversible damage to the **EWCM 9000 PRO** controller.

The **EWCM 9000 PRO 42 I/O** wiring diagram consists of the wiring diagram described in
"3.3.1. Wiring diagram for base board terminals" page 42.
"3.3.2. Wiring diagram for upper board terminals" page 43.

NOTICE
INOPERABLE DEVICE Before switching on the electrical power, verify all the wiring connections. **Failure to follow these instructions can result in equipment damage.**

3.3.1. Wiring diagram for base board terminals

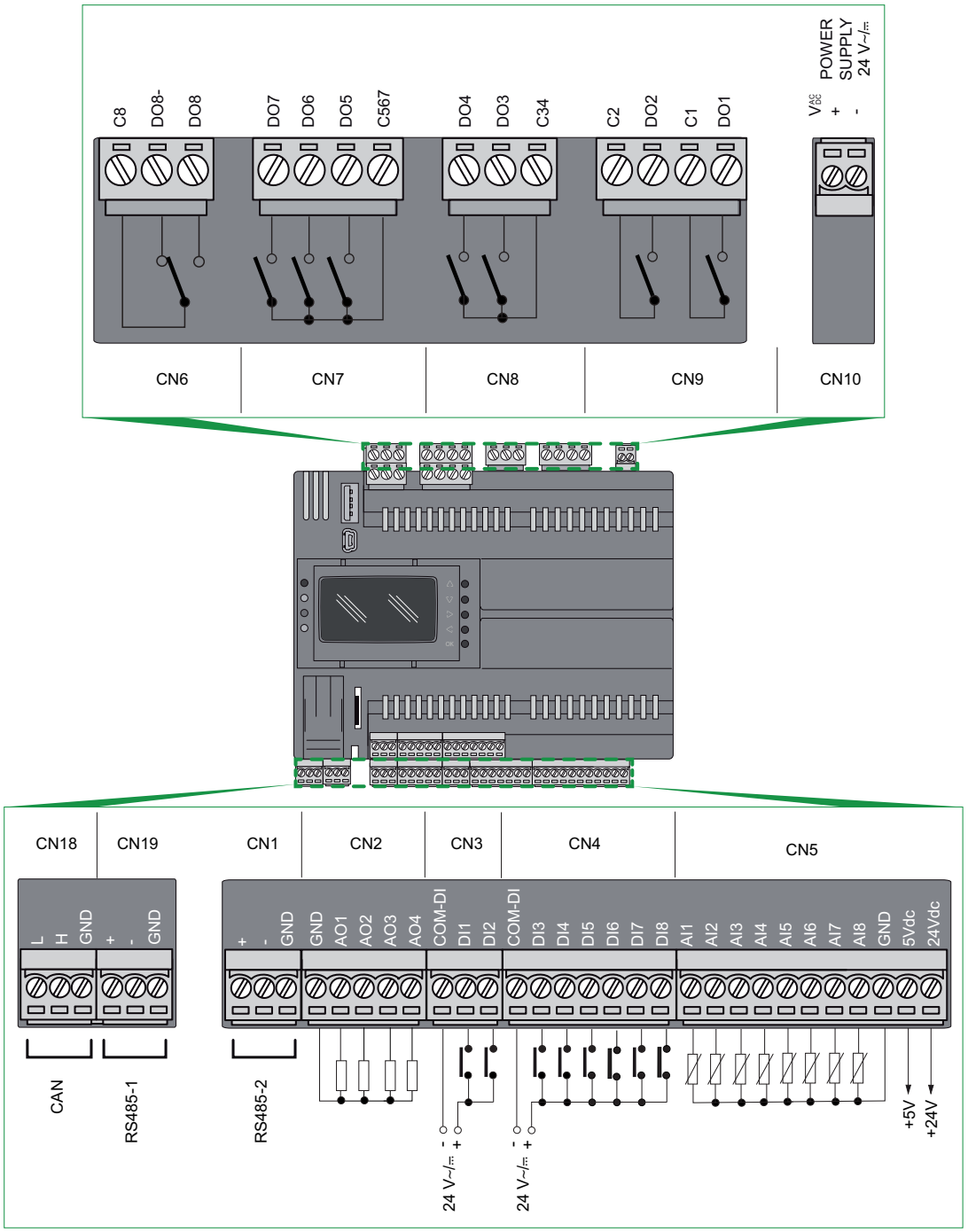

Fig. 24. Wiring diagram for base board screw terminals

For more information see **CHAPTER 4 “Technical data” page 67**.

3.3.2. Wiring diagram for upper board terminals

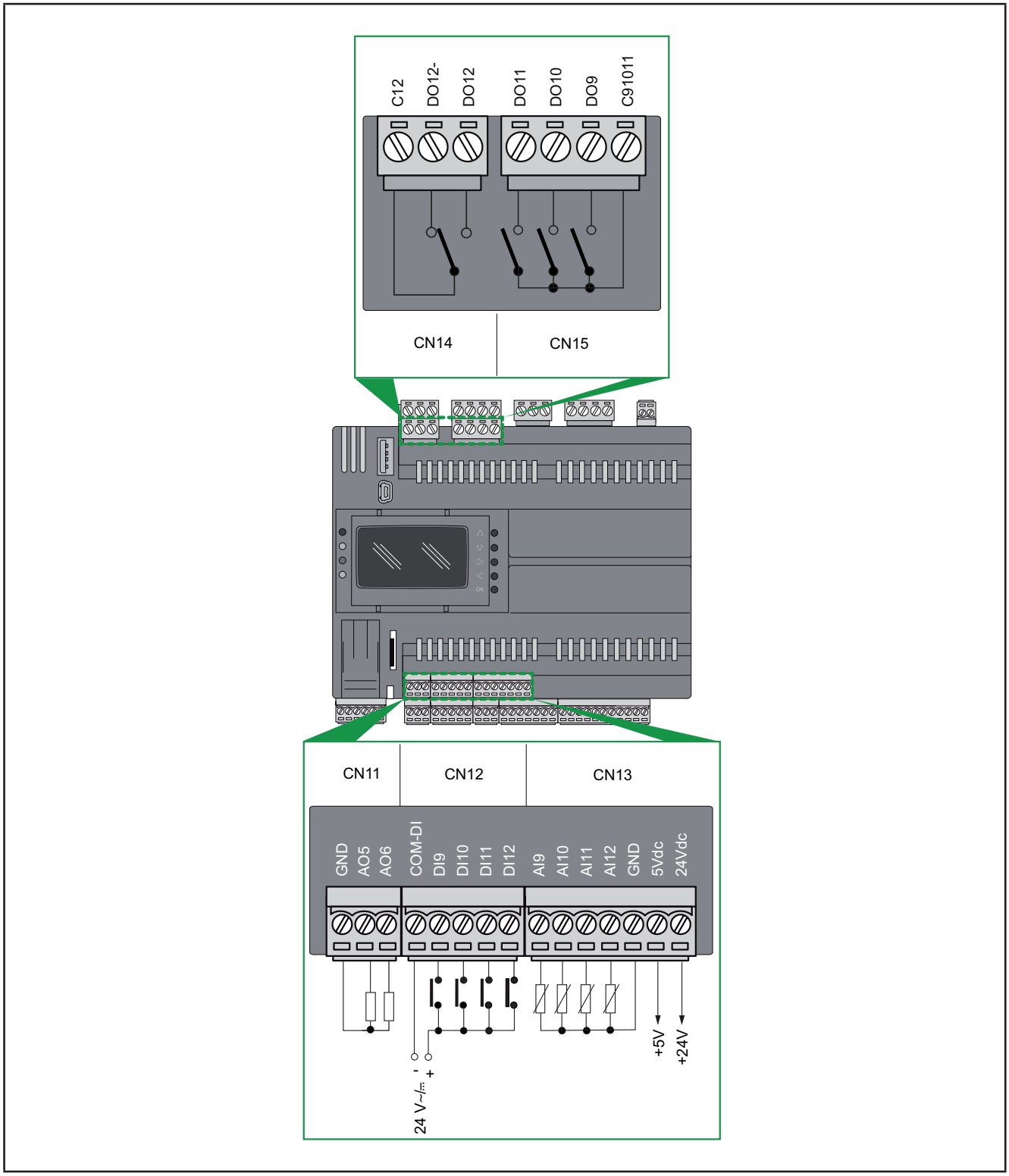

Fig. 25. Wiring diagram for upper board screw terminals

For more information see **CHAPTER 4 "Technical data" page 67**.

Connector labels for base board terminals

The following terminals can be found in the base board of the **EWCM 9000 PRO** controller 42 I/O.

	Connector	Label	Description
POWER SUPPLY	**CN10**	**V AC DC**	Power supply +24 Vac / Vdc **EWCM 9000 PRO** has a specific connection polarity for the c.c. power supply and must be complied with.
POWER OUTPUT	**CN5**	**24Vdc**	+24 Vdc power supply output for analogue inputs, max. current 150 mA ([1])
		5Vdc	+5 Vdc power supply output for ratiometric analogue inputs, max. current 50 mA ([2])
CAN	**CN18**	**H**	"High" signal for CAN expansion bus
		L	"Low" signal for CAN expansion bus
		GND	0 V signal earth
RS 485-1	**CN19**	**+**	"+" signal for RS 485-1 serial port
		-	"-" signal for RS 485-1 serial port
		GND	0 V signal earth
RS 485-2	**CN1**	**+**	"+" signal for RS 485-2 serial port
		-	"-" signal for RS 485-2 serial port
		GND	0 V signal earth
FAST DIGITAL INPUTS	**CN3**	**DI1, DI2**	Fast digital inputs 1, 2 (Pulse/frequency counter up to 2 kHz)
		COM-DI	Common for digital inputs 1, 2
NORMAL DIGITAL INPUTS	**CN4**	**DI3, DI4, DI5, DI6, DI7, DI8**	Normal digital inputs 3, 4, 5, 6, 7, 8
		COM-DI	Common for digital inputs 3, 4, 5, 6, 7, 8
DIGITAL OUTPUTS	**CN9**	**DO1**	Relay 1 SPST output (for **EWCM 9000 PRO 42D SSR** this output is an SSR)
		C1	Common for relay 1 output
		DO2	Relay 2 SPST output (for **EWCM 9000 PRO 42D SSR** this output is an SSR)
		C2	Common for relay 2 output
	CN8	**DO3, DO4**	Relay 3, 4 SPST outputs
		C34	Common for relay 3, 4 outputs
	CN7	**DO5, DO6, DO7**	Relay outputs SPST 5, 6, 7
		C567	Common for relay 5, 6, 7 outputs
	CN6	**DO8, DO8-**	Relay 8 SPDT output: DO8 is the normally open side DO8- is the normally closed side
		C8	Common for relay 8 output
ANALOGUE INPUTS	**CN5**	**AI1, AI2, AI3, AI4, AI5, AI6, AI7, AI8**	Analogue inputs 1, 2, 3, 4, 5, 6, 7, 8 or no voltage digital inputs
		GND	0 V signal earth
ANALOGUE OUTPUTS	**CN2**	**AO1, AO2**	Analogue outputs 1, 2
		AO3, AO4	Analogue outputs 3, 4 or PWM Open Collector outputs
		GND	0 V signal earth

([1]) 150 mA is the sum of the maximum currents delivered by the various "+24 Vdc" terminals (the "24 Vdc" terminal in connector CN5 and the "+24 Vdc" terminal in connector CN13 if the device is model **EWCM 9000 PRO 42D (/SSR)**).
([2]) 50 mA is the sum of the maximum currents delivered by the various "+5 Vdc" terminals (the "+5 Vdc" terminal in connector CN5 and the "5Vdc" terminal in connector CN13 if the device is model **EWCM 9000 PRO 42D (/SSR)**).

The COM-DI terminals are not connected to each other internally. However, the terminals marked GND are connected to each other internally.

⚠ WARNING

INCORRECT OPERATION OF THE DEVICE

- Make sure each COM-DI terminal is connected independently to the referred voltage for the input group on the respective connector.
- Do not disconnect any terminals marked GND to interrupt the circuit of a device on the respective connector.

Failure to follow these instructions can result in death, serious injury, or equipment damage.

Connector labels for upper board terminals

The following terminals can be found in the upper board of controller **EWCM 9000 PRO (HF)** 42 I/O.

	Connector	Label	Description
POWER OUTPUT	**CN13**	**24Vdc**	+24 Vdc power supply output for analogue inputs, max. current 150 mA ([1])
		5Vdc	+5 Vdc power supply output for ratiometric analogue inputs, max. current 50 mA ([2])
DIGITAL INPUTS	**CN12**	**DI9, DI10, DI11, DI12**	Digital inputs 9, 10, 11, 12
		COM-DI	Common for digital inputs 9, 10, 11, 12
DIGITAL OUTPUTS	**CN15**	**DO9, DO10, DO11**	Relay SPST 9, 10, 11 outputs
		C91011	Common for relay outputs 9, 10, 11
	CN14	**DO12, DO12-**	Relay 12 SPDT output: DO12 is the normally open side DO12- is the normally closed side
		C12	Common for relay output 12
ANALOGUE INPUTS	**CN13**	**AI9, AI10, AI11, AI12**	Analogue inputs 9, 10, 11, 12
		GND	0 V signal earth
OUTPUTS ANALOGUE	**CN11**	**AO5, AO6**	Analogue outputs 5, 6
		GND	0 V signal earth

([1]) 150 mA is the sum of the maximum currents delivered by the various “+24 Vdc” terminals (the “+24 Vdc” terminal in connector CN5 and the “+24 Vdc” terminal in connector CN13 if the device is model **EWCM 9000 PRO 42D (/SSR)**).
([2]) 50 mA is the sum of the maximum currents delivered by the various “+5 Vdc” terminals (the “+5 Vdc” terminal in connector CN5 and the “+5 Vdc” terminal in connector CN13 if the device is model **EWCM 9000 PRO 42D (/SSR)**).

The COM-DI terminals are not connected to each other internally. However, the terminals marked GND are connected to each other internally.

⚠ WARNING

INCORRECT OPERATION OF THE DEVICE

- Make sure each COM-DI terminal is connected independently to the referred voltage for the input group on the respective connector.
- Do not disconnect any terminals marked GND to interrupt the circuit of a device on the respective connector.

Failure to follow these instructions can result in death, serious injury, or equipment damage.

3.3.3. Connection of EVK PRO DISPLAY

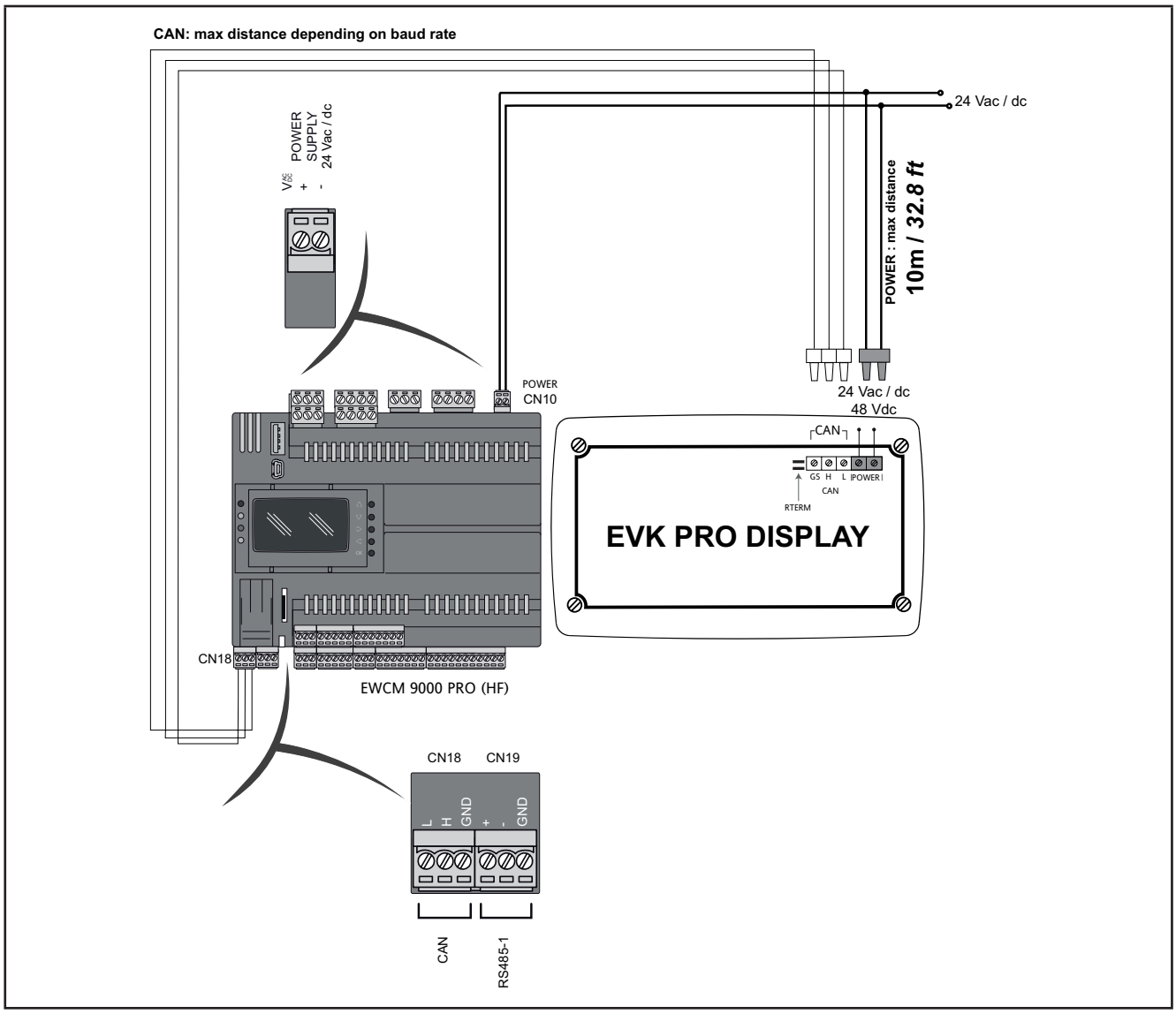

Fig. 26. Connection of the EVK PRO DISPLAY terminal

NOTE: When powering from **EWCM 9000 PRO (HF) controllers**, reduce the length of the power cables as much as possible.

NOTICE

INOPERABLE DEVICE

Do not connect power cables longer than 10 m (32.8 ft).

Failure to follow these instructions can result in equipment damage.

	LABEL	DESCRIPTION	NOTES
POWER SUPPLY	**POWER IN**	+24 Vac / Vdc or +48 Vdc power	Maximum cable length 10 m (32.8 ft)
			from **EWCM 9000 PRO (HF)** or independent power supply
CAN	**GS H L**	Isolated CAN serial **GS** ground serial isolated from **G**	R TERM Termination resistors for CAN
			Maximum cable length See **"3.1.6. Serial connections" page 38**

3.4. EXP 4D PRO wiring diagram

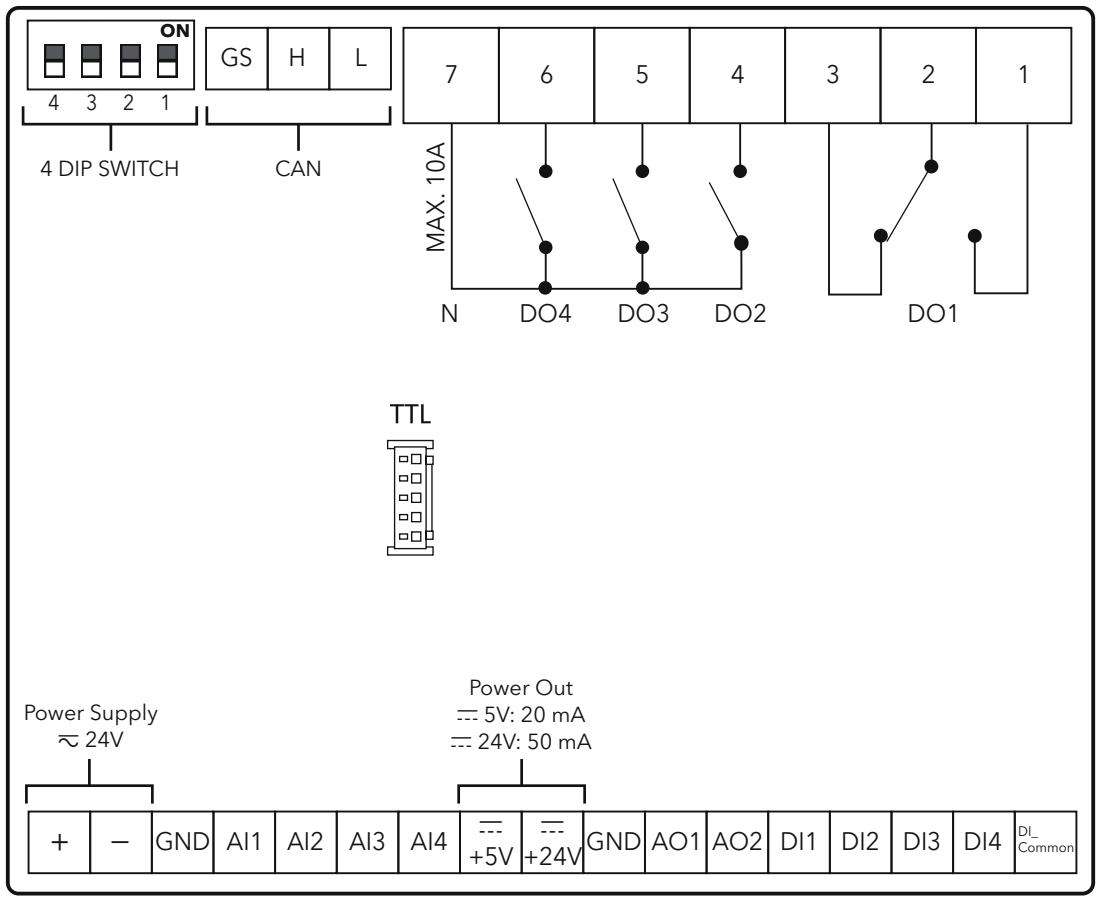

Fig. 27. EXP 4D PRO wiring diagram

Connector labels for EXP 4D PRO

	LABEL	DESCRIPTION	NOTES
DIP SWITCH	**4 DIP SWITCH**	4 position selectors (Dip Switch)	Dip Switch default setting OFF
POWER SUPPLY ELECTRICAL	**+ / -**	Power supply +24 Vac / Vdc	-
ANALOGUE OUTPUTS	**AO1, AO2**	Analogue outputs 1 and 2	See **"4.3.3. Analogue output characteristics" page 72** for more details
	G	0 V signal earth	
	+24V	Power Out +24 Vdc output	
	+5V	Power Out +5 Vdc output	
DIGITAL OUTPUTS	**1-2-3**	Relay output 1 SPDT **DO1**	**1** is the normally open side, **3** is the normally closed side
	4-5-6	Relay 2-3-4 SPDT outputs **DO2 DO3 DO4**	-
	7	Common for relay 2-3-4 outputs **N**	10 A max.
CAN	**GS H L**	Isolated CAN serial **GS** ground serial isolated from **G**	Dip Switch **3-4** termination resistors for CAN
DIGITAL INPUTS	**DI1...DI4**	Digital inputs 1...4	-
	DI_Common	Common for digital inputs 1...4	
ANALOGUE INPUTS	**AI1...AI4**	Analogue inputs	-
	G	0 V signal earth	

3.5. EVS compatible communication modules

Communication modules are 2DIN modules that can be connected to an **EWCM 9000 PRO-HF compressor rack controller** via the connector of the communication module on the left hand side of the controller, behind the removable door. The communication module is anchored to the controller with the two fixing hooks.
It assembles onto the DIN rail in the same way as the controller.

Interface for	Communication module	
RS-232	**EVS RS232/R**	5A SPDT relay available
RS-485	**EVS RS485** **EVS RS485 BACnet MS/TP**	RS 485 in Daisy Chain (1)
CAN expansion bus	**EVS CAN**	CAN expansion bus in Daisy Chain (1)
LON	**EVS LON**	LonWorks communication module

(1) Use a shielded cable. See **"3.1.6. Serial connections" page 38**.

3.5.3.1. Compatibility of communication modules with EWCM 9000 PRO-HF

EWCM 9000 PRO-HF controllers can be connected with the following **EVS** communication modules:

Communication module	Description	Protocols
EVS CAN	CAN communication module	1 x CAN - Daisy chain
EVS RS485	Modbus SL communication module	Modbus Serial Line (SL)
EVS RS485 BACnet MS/TP	Communication module BACnet MSTP or Modbus	Modbus Serial Line or BACnet MS/TP
EVS RS232/R	RS-232 communication module with relay	RS-232 ASCII - 1 x 5 A SPDT relay
EVS LON	LonWorks communication module	LonWorks

⚠ WARNING

INCORRECT OPERATION OF THE DEVICE

Before switching on the electrical power, verify all the wiring connections.

Failure to follow these instructions can result in death, serious injury, or equipment damage.

In association with the compressor rack controller **EWCM 9000 PRO-HF** use only the listed compatible communication modules.

NOTE: The LonWorks communication module supports up to 63 nodes. Exceeding this specification may cause an electrical overload in the **EVS LON** communication module and consequently in the **EWCM 9000 PRO-HF compressor rack controller**.

⚠ WARNING

INCORRECT OPERATION OF THE DEVICE

Do not exceed the maximum limit of 63 nodes on the **EVS LON** communication module.

Failure to follow these instructions can result in death, serious injury, or equipment damage.

For more information on the LonWorks network, see the web page at www.echelon.com

An example of connecting the **EVS** communication modules is given below
The power supply is delivered by **EWCM 9000 PRO-HF**.

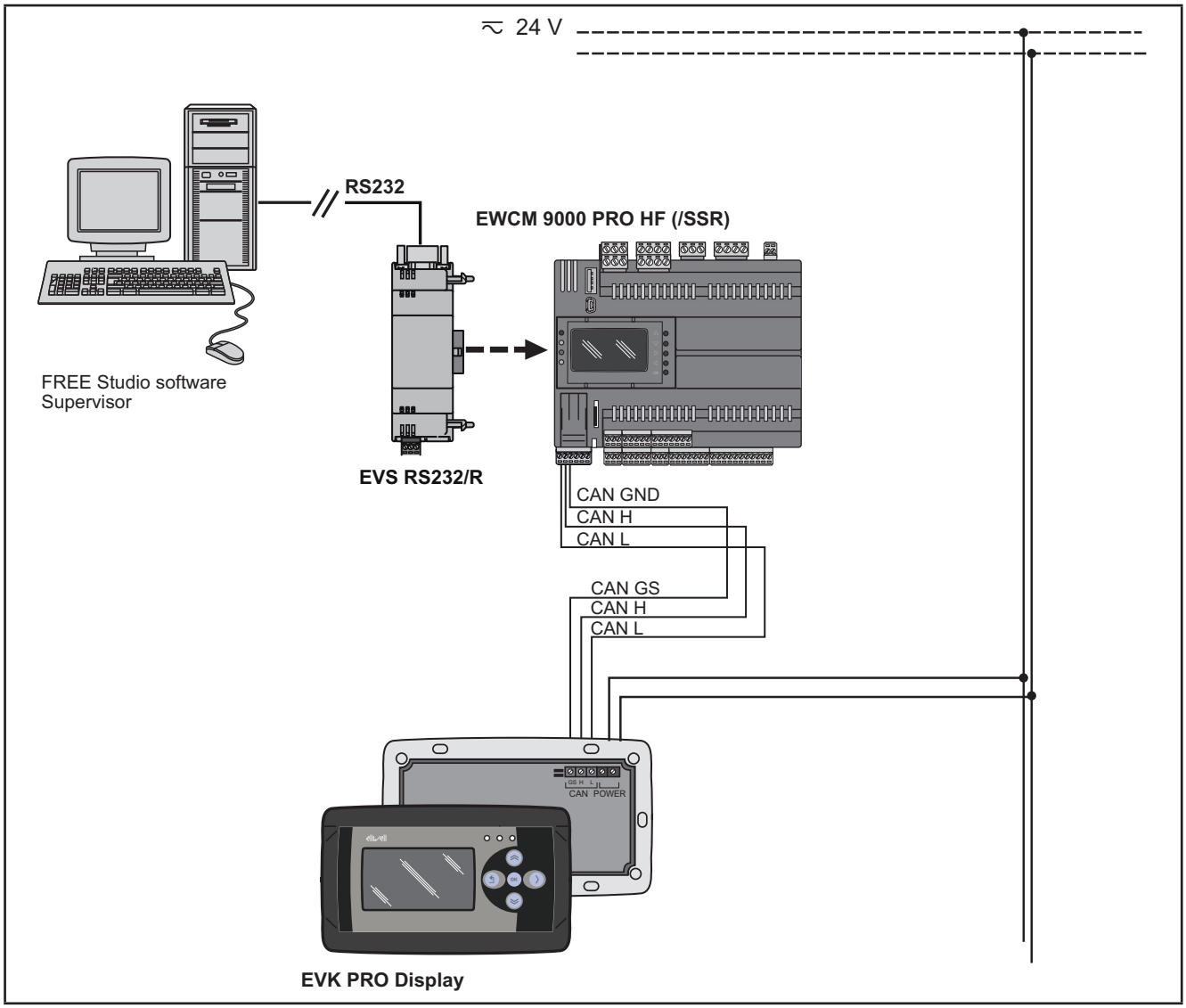

Fig. 28. Modbus RTU communication protocol via EVS RS232/R

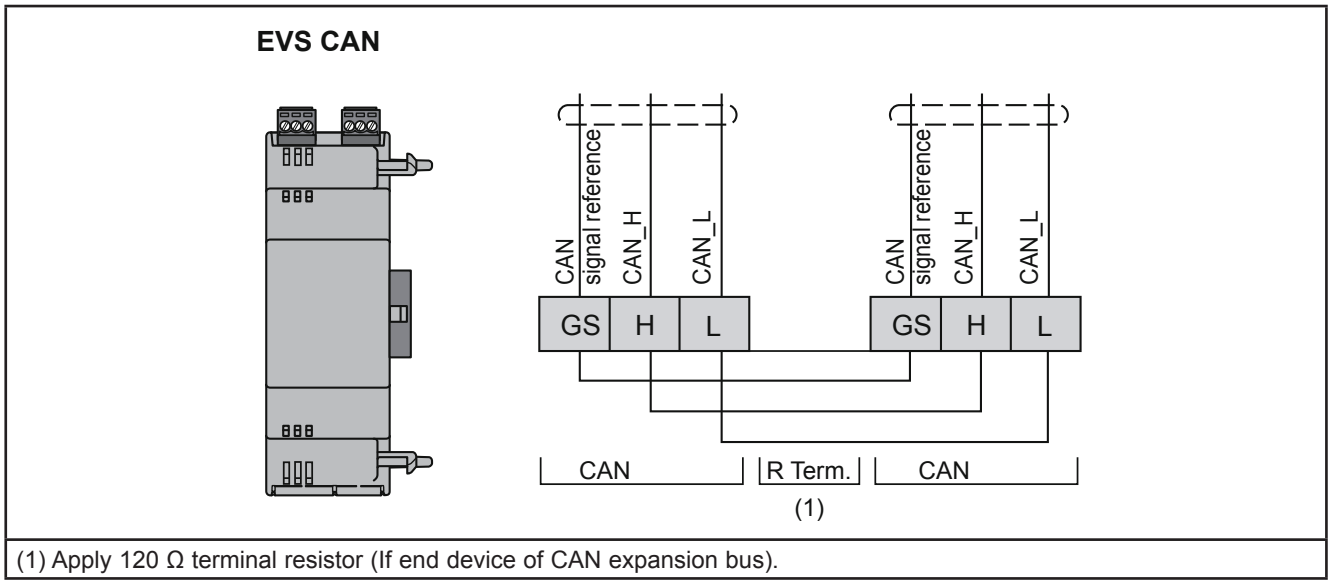

(1) Apply 120 Ω terminal resistor (If end device of CAN expansion bus).

Fig. 29. CAN communication module

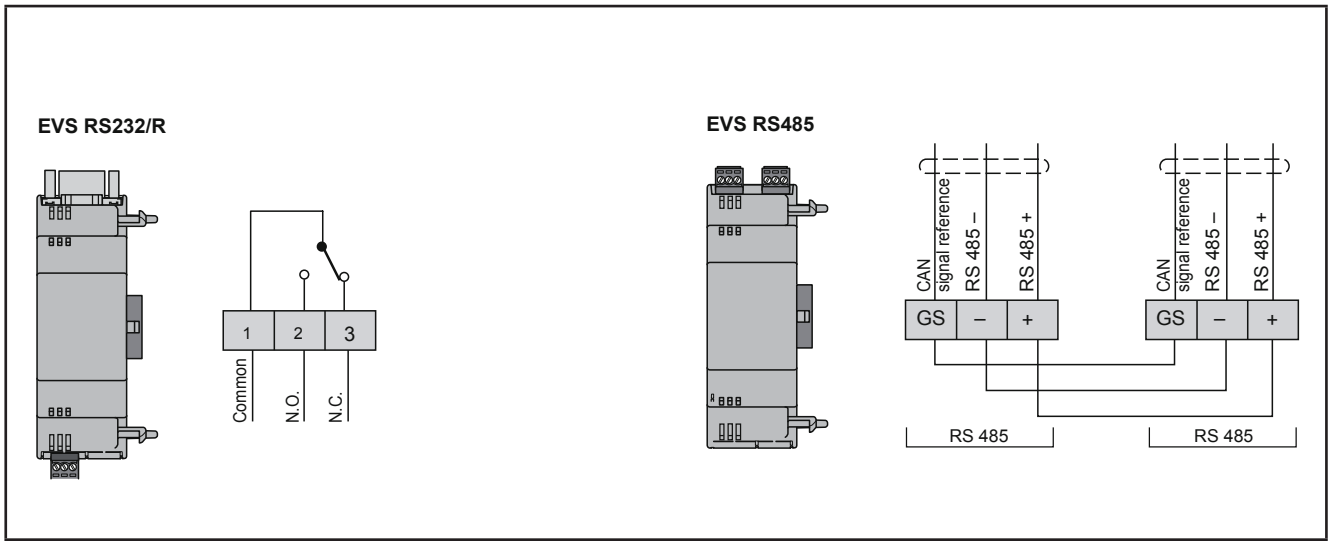

Fig. 30. Communication modules RS232, RS485

NOTE.
GS is connected to EWCM 9000 PRO GND pin.

3.6. Connection examples

3.6.1. Analogue input connection examples

The analogue inputs can be configured via the parameters as described in **CHAPTER 6 “Physical I/O configuration and serial ports” page 87.**

3.6.1.1. NTC/PTC/Pt1000 probe connection

Parameter	Type	Value
13.037 - P01	NTC	0 (if NK103) or 2 (if 103AT)
13.038 - P02	NTC	0 (if NK103) or 2 (if 103AT)
13.039 - P03	NTC	0 (if NK103) or 2 (if 103AT)
13.040 - P04	NTC	0 (if NK103) or 2 (if 103AT)
13.041 - P05	PTC	6
13.042 - P06	PTC	6
13.043 - P07	Pt1000	9
13.044 - P08	Pt1000	9

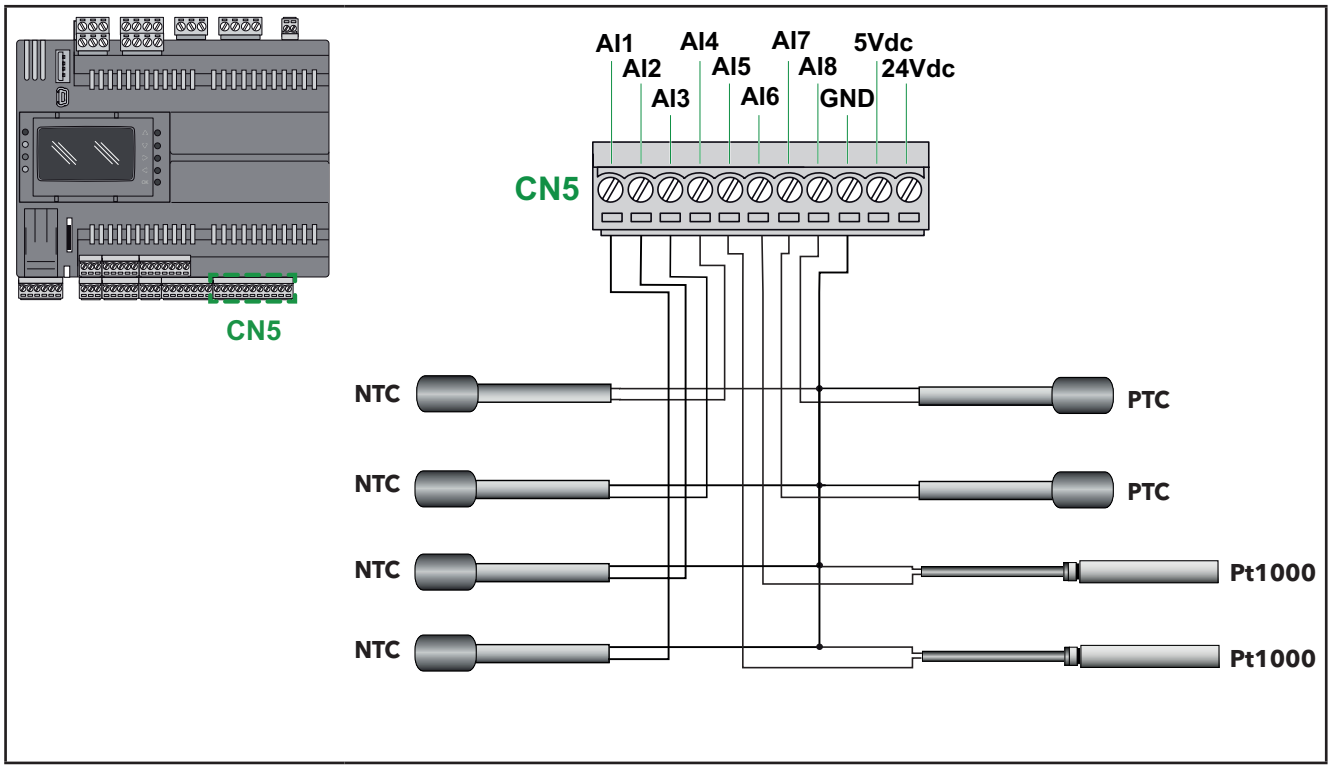

Fig. 31. NTC/PTC/Pt1000 probe connection

3.6.1.2. 0...10 V transducer connection

Parameter	Type	Value
13.037 - P01	0 -10 V	4
13.038 - P02	0 -10 V	4
13.039 - P03	0 -10 V	4
13.040 - P04	0 -10 V	4
13.041 - P05	0 -10 V	4
13.042 - P06	0 -10 V	4
13.043 - P07	0 -10 V	4
13.044 - P08	0 -10 V	4

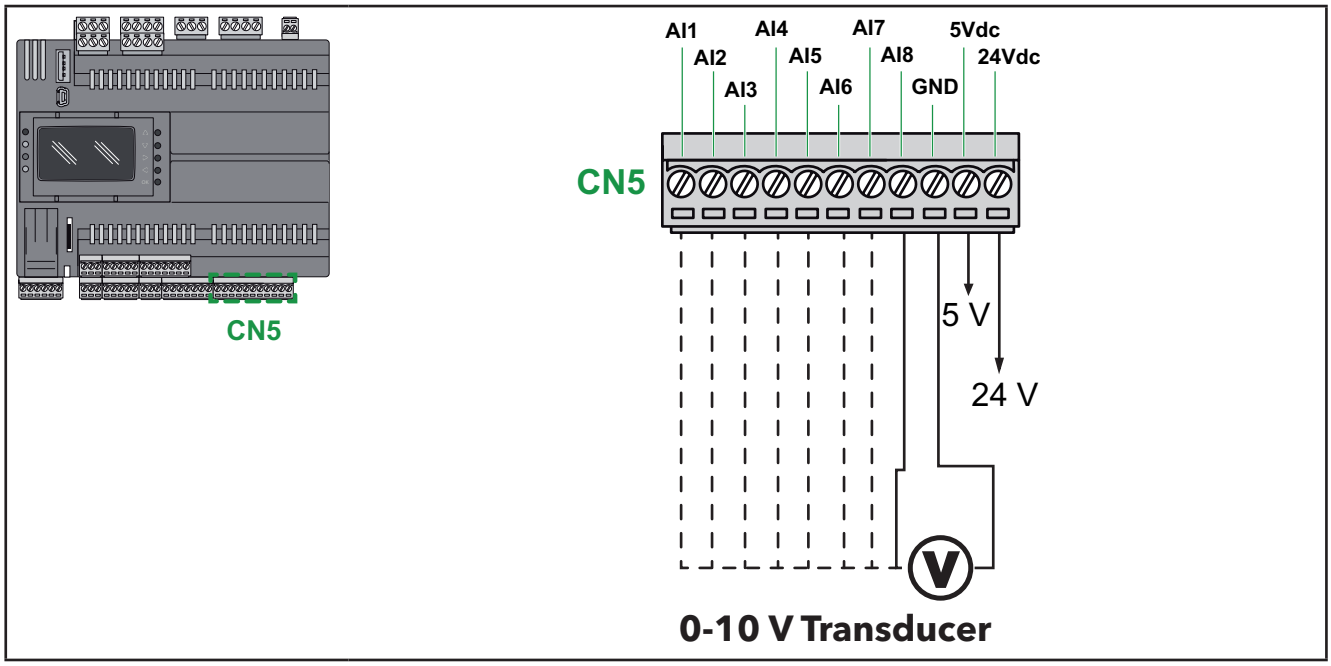

Fig. 32. 0...10 V transducer connection

3.6.1.3. 0/4...20 mA pressure transducer connection

Parameter	Type	Value
13.039 - P03	0 ... 20 mA	11
13.040 - P04	0 ... 20 mA	11
13.041 - P05	0 ... 20 mA	11
13.042 - P06	0 ... 20 mA	11
13.043 - P07	4 ... 20 mA	3
13.044 - P08	4 ... 20 mA	3

With a generic 3-wire transducer, connect the reference wire 0 V (ground where indicated by the transducer manufacturer) to the GND terminal and the transducer power supply to the **24 Vdc** screw terminal.

NOTICE

INOPERABLE DEVICE

Before switching on the electrical power, verify all the wiring connections.

Failure to follow these instructions can result in equipment damage.

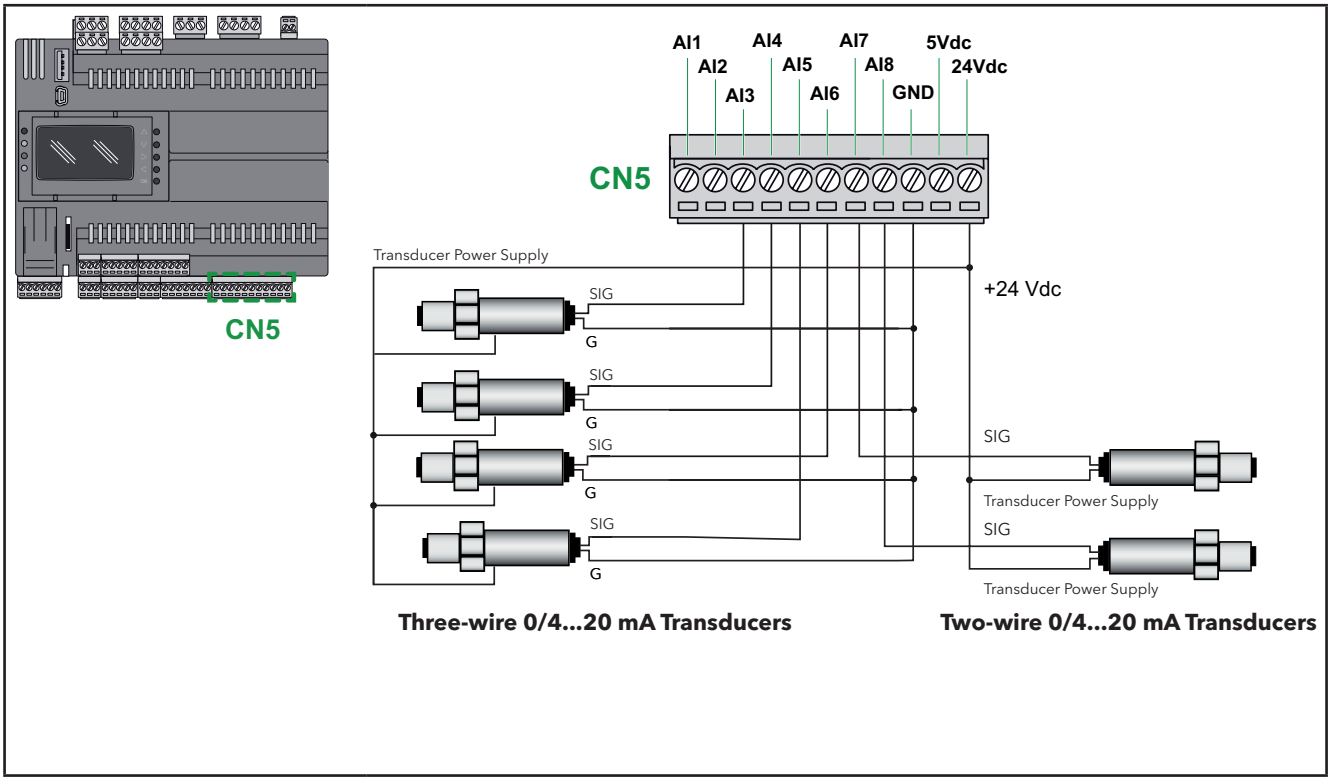

EWCM 9000 PRO	Three-wire transducer	Two-wire transducer
GND	G	-
AI3, AI4, AI5, AI6	SIG	-
AI7, AI8	-	SIG
24Vdc	Transducer power supply	

Fig. 33. 0/4...20 mA pressure transducer connection

3.6.1.4. Ratiometric transducer connection

Parameter	Value
13.039 - P03	5
13.040 - P04	5
13.041 - P05	5
13.042 - P06	5

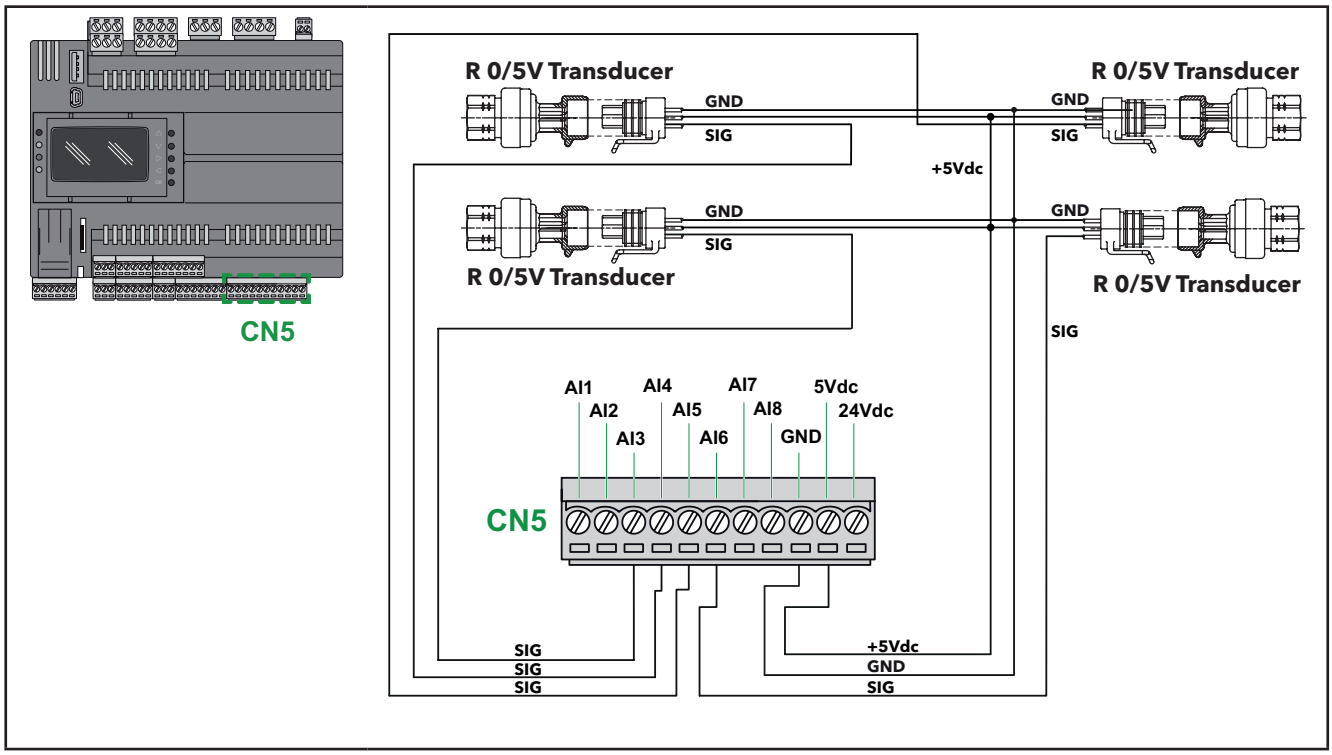

EWCM 9000 PRO	R 0/5 V transducer
GND	GND
AI3 AI4 AI5 AI6	SIG
5Vdc	+5 Vdc

Fig. 34. Ratiometric transducer connection

3.6.1.5. Digital input connection (via analogue input terminal)

Parameter	Value
13.037 - P01	1
13.038 - P02	1
13.039 - P03	1
13.040 - P04	1
13.041 - P05	1
13.042 - P06	1
13.043 - P07	1
13.044 - P08	1

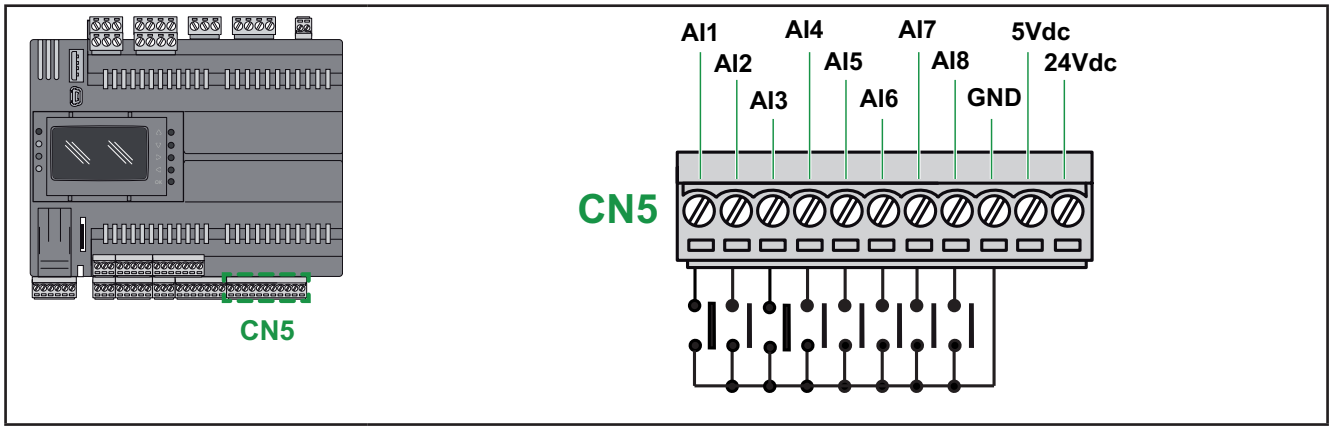

Fig. 35. Digital input connection (via analogue input terminal)

3.6.2. Analogue output connection examples

3.6.2.1. Voltage/current connection

Parameter	Output	Type	Value
-	AO1 / AO2	voltage output	NA
13.073 - n01	AO3	ON/OFF current	1
13.074 - n02	AO4	ON/OFF current	1
-	AO5 / AO6	voltage output	NA

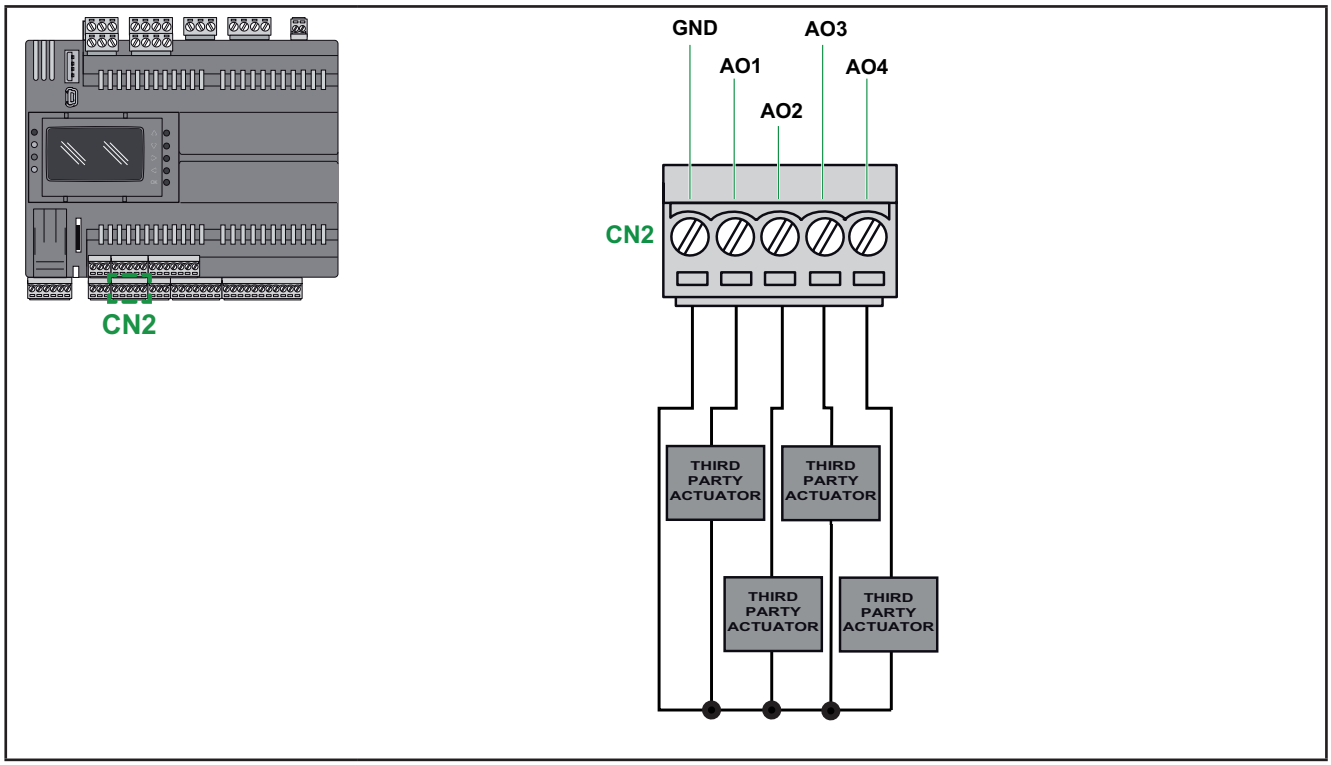

Fig. 36. Voltage/current connection

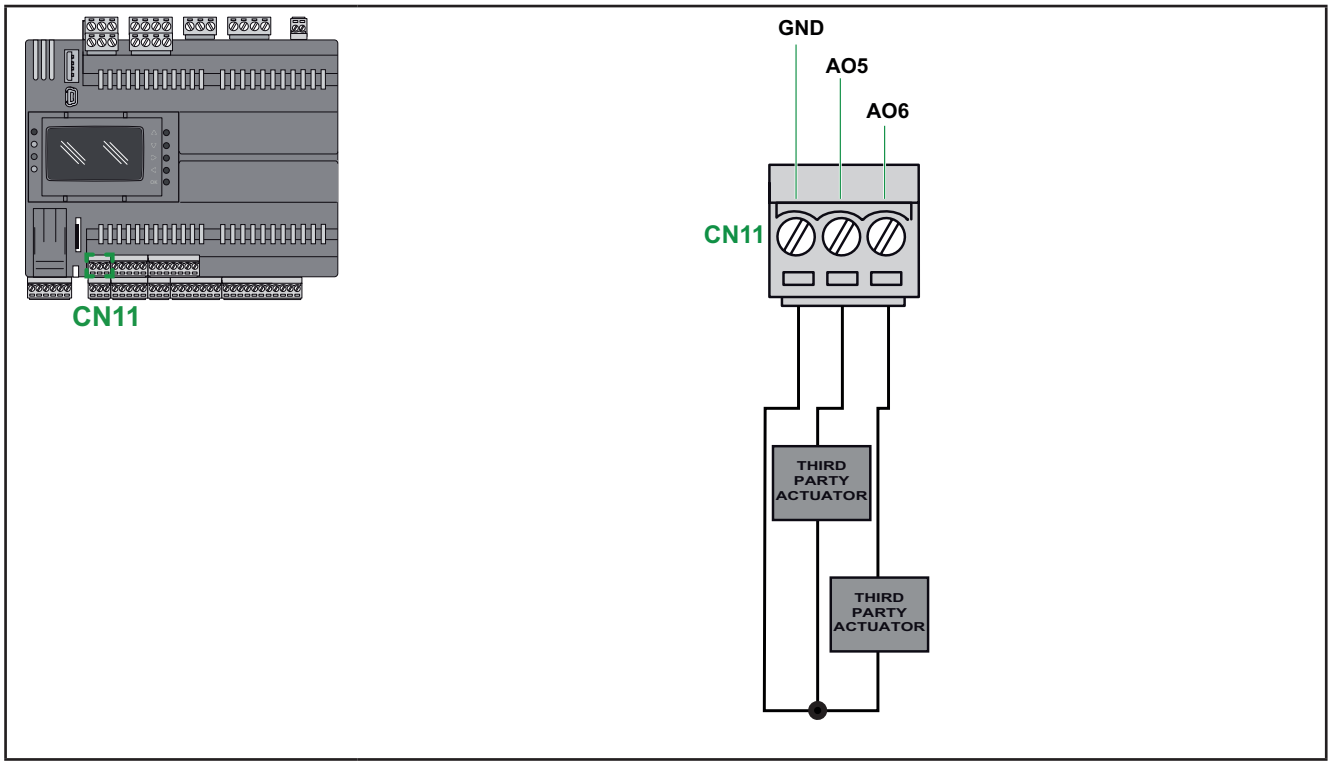

Fig. 37. Voltage/current connection

3.6.2.2. External relay connection

Parameter	Value
13.073 - n01	3
13.074 - n02	3

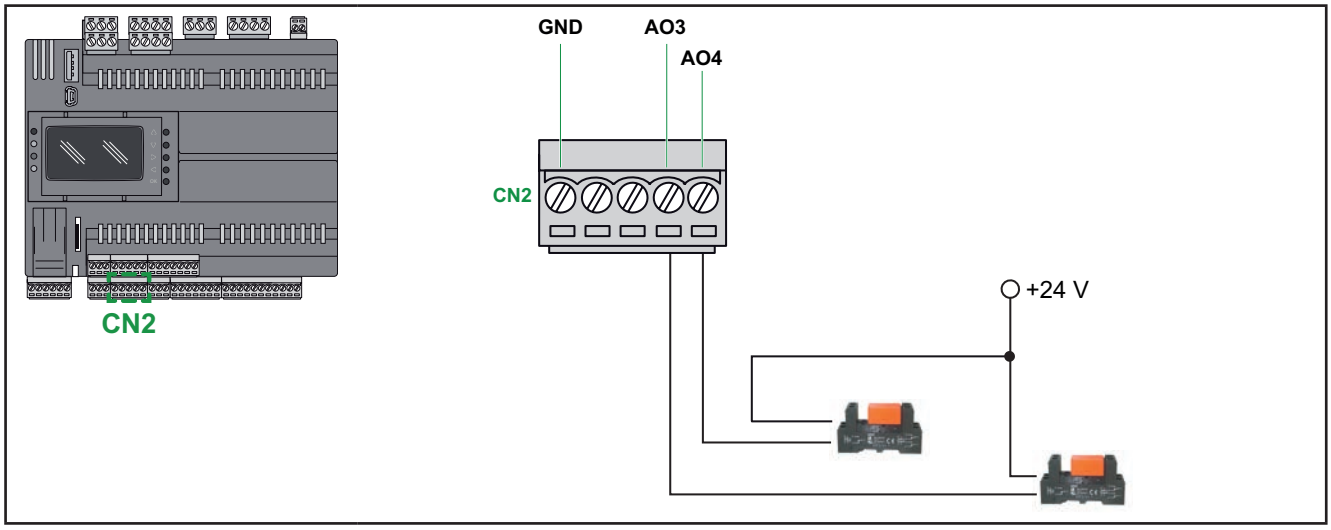

Fig. 38. External relay connection

3.7. EWCM 9000 PRO (HF) protocol connectivity

3.7.1. Example: Connection in CAN expansion bus network (Field)

A connection in CAN expansion bus network (Field) may consist of:

- Maximum 1 **EWCM 9000 PRO EWCM 9000 PRO 42D (/SSR)** operating as MASTER
- Maximum 12 **EXP 4D PRO** operating as SLAVE
- It is not possible to add more than two **EVK PRO DISPLAY graphic displays** to the network connected to the **EWCM 9000 PRO EWCM 9000 PRO 42D (/SSR)**

The **EVK PRO DISPLAY** graphic display is powered externally.

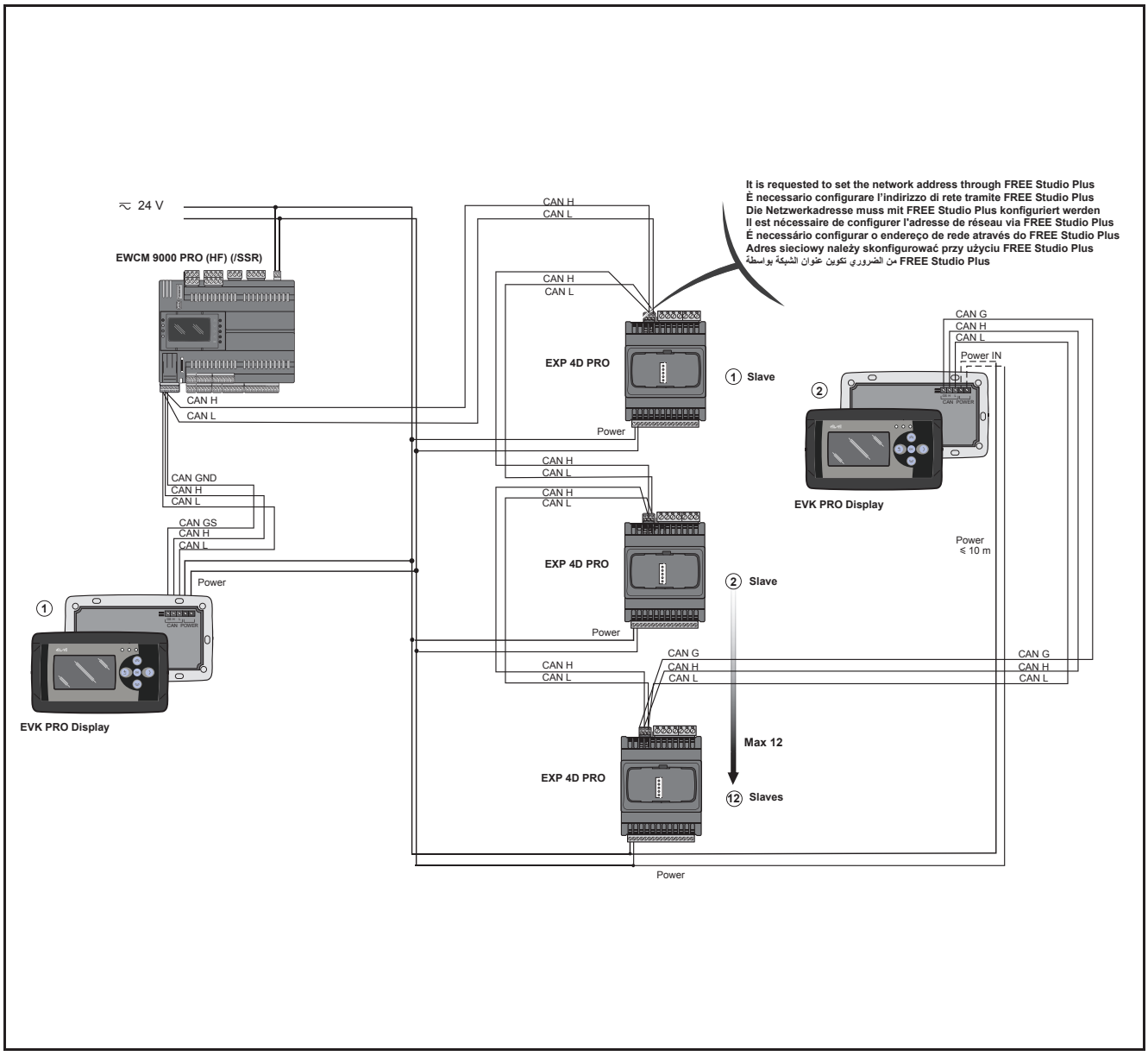

Fig. 39. Connection in CAN expansion bus network (Field) via EWCM 9000 PRO

3.7.2. DIP Switch expansion EXP 4D PRO

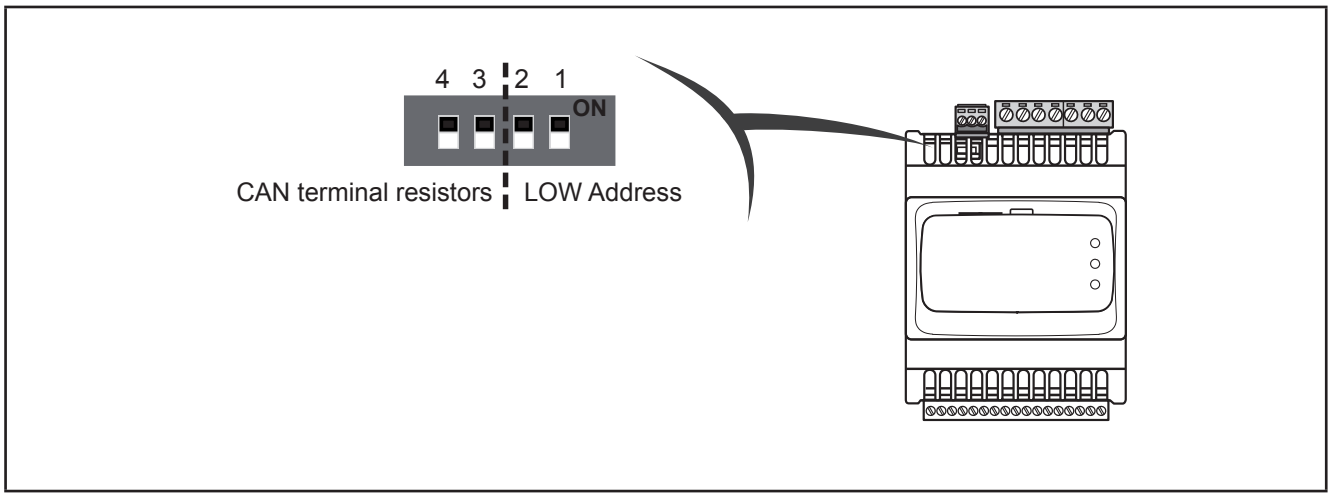

Fig. 40. 4-position lateral DIP Switch

3.7.2.1. 4-position lateral DIP Switch

Used for:
- Serial addressing (dip 1 and 2)
- line termination (dip 3 and 4)
  Both Dip4 and Dip3 = 1 connect the CAN L/H lines to the termination at 120Ω

3.7.2.2. Dip Switch 1-2 serial addressing

The CAN address of the EXP 42PRO expansions is the sum of the address of the expansion + binary value of DIP 1-2

Addr_CAN_OB + binary value of DIP switch 1-2

The configuration is done with the commissioning tool FREE Studio Plus
It is not possible to configure the network via **EWCM 9000 PRO-HF**.

						Dip Switch 0= OFF, 1 = ON	
Serial addressing	**EXP 4D PRO**	**CAN address**	**Addr_CAN_OB**	**+**	**dip value**	**2**	**1**
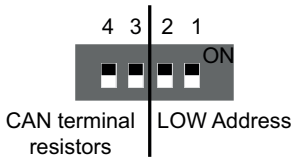	EXP 4D PRO 1	**1**	1	+	0	**0**	**0**
	EXP 4D PRO 2	**2**	1		1	**0**	**1**
	EXP 4D PRO 3	**3**	1		2	**1**	**0**
	EXP 4D PRO 4	**4**	1		3	**1**	**1**
	EXP 4D PRO 5	**5**	5		0	**0**	**0**
	EXP 4D PRO 6	**6**	5		1	**0**	**1**
	EXP 4D PRO 7	**7**	5		2	**1**	**0**
	EXP 4D PRO 8	**8**	5		3	**1**	**1**
	EXP 4D PRO 9	**9**	9		0	**0**	**0**
	EXP 4D PRO 10	**10**	9		1	**0**	**1**
	EXP 4D PRO 11	**11**	9		2	**1**	**0**
	EXP 4D PRO 12	**12**	9		3	**1**	**1**

3.7.2.3. Dip Switch 3-4 line termination

If the expansions are the first and last module in the network, set only for the first and last expansion module EXP 4D PRO in the network: DIP 3 = ON, DIP 4 = ON.

3.7.2.4. CAN OB serial addressing

The address consists of the sum of the parameter value **EXP 4D PRO** plus the value composed of the 4-position DIP Switches (dip 1 and 2 only).

Effective CAN address Default = 1		Addr_CAN_OB Default = 1		CAN address selection Default = 0
1	=	**Addr_CAN_OB** *(1)*	+	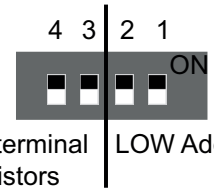
2				
...				
...				
127 max				
default example		**1**	+	**0**

(1) Refer to the Device Manager PRO tool for configuring parameter **EXP 4D PRO.**

3.7.3. Example: RS 485 connection (Field)

An RS 485 connection (Field) may consist of:

Description	Notes
1 **EWCM 9000 PRO EWCM 9000 PRO 42D (/SSR)**	**EWCM 9000 PRO 42D (/SSR)** is in Modbus RTU Master mode
	Maximum 32 modules connected in RS 485
1 **EVK PRO DISPLAY graphic display** connected on the CAN expansion bus to **EWCM 9000 PRO EWCM 9000 PRO 42D (/SSR)**	-

The **EVK PRO DISPLAY graphic display** is powered externally.

NOTE. The RS-485 Master bus must be connected only to the serial RS-485-2 (model EWCM 9000 PRO-HF only).

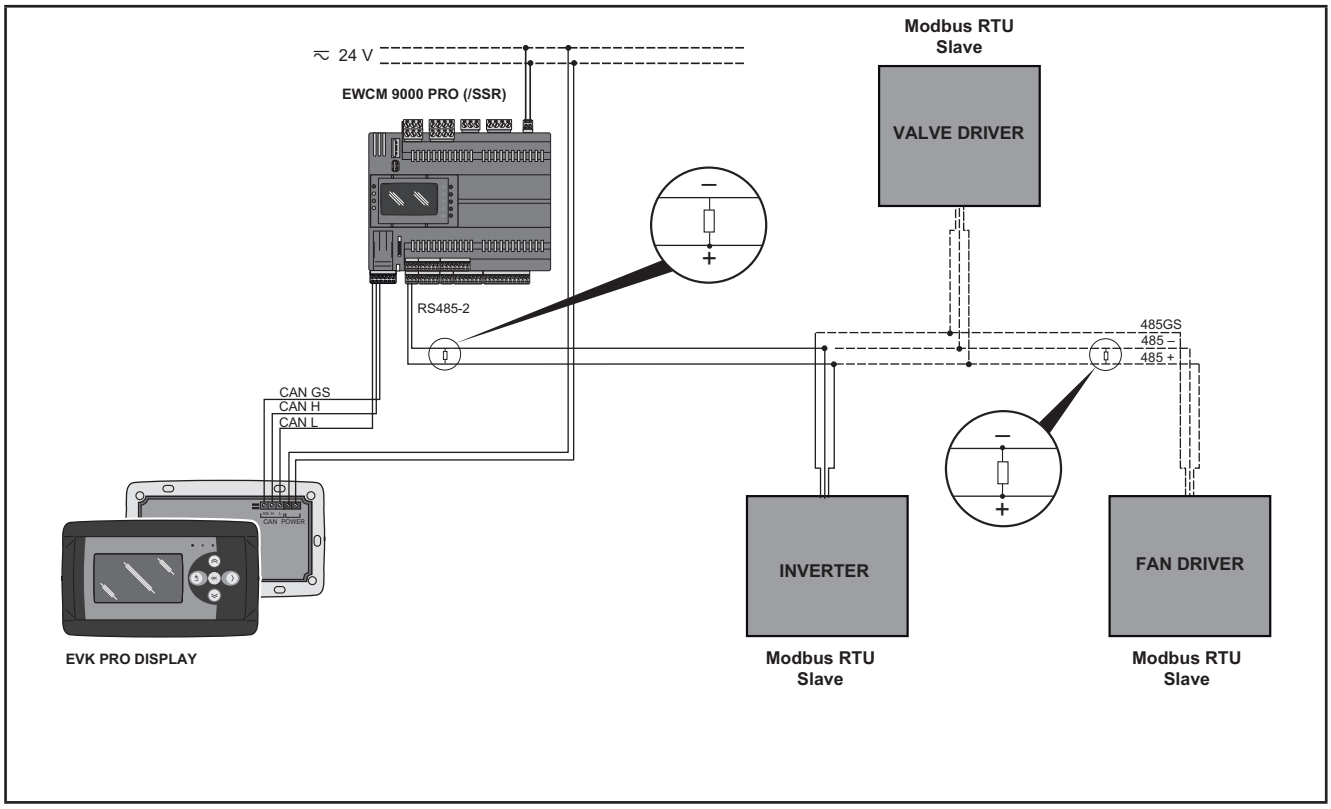

Fig. 41. RS 485 connection (Field) via EWCM 9000 PRO

3.7.4. Example: RS 485 connection

An RS 485 set as Modbus Master connection may consist of:

Description	Notes
EWCM 9000 PRO EWCM 9000 PRO 42D (/SSR)	**EWCM 9000 PRO 42D (/SSR)** is in Modbus RTU Master mode on RS-485-2 (1)
Maximum 32 **EWCM 9000 PRO EWCM 9000 PRO 42D (/SSR)** or Eliwell and/or other manufacturers' devices equipped with RS 485 serial	All devices with RS 485 are in Modbus RTU Slave mode
For the CAN expansion bus network, refer to **"3.7.1. Example: Connection in CAN expansion bus network (Field)" page 58**.	The connection on CAN expansion bus may be: • Field, as illustrated • Network, if one or more **EWCM 9000 PRO EWCM 9000 PRO 42D (/SSR)** are connected in binding
1 **EVK PRO DISPLAY graphic display** connected on the CAN expansion bus to **EWCM 9000 PRO EWCM 9000 PRO 42D (/SSR)**	-

(1) Only RS-485-2 on the **EWCM 9000 PRO (HF) compressor rack controller** or RS-485 on the communication module can be set in Modbus RTU Master mode.
The **EVK PRO DISPLAY graphic display** is powered externally.

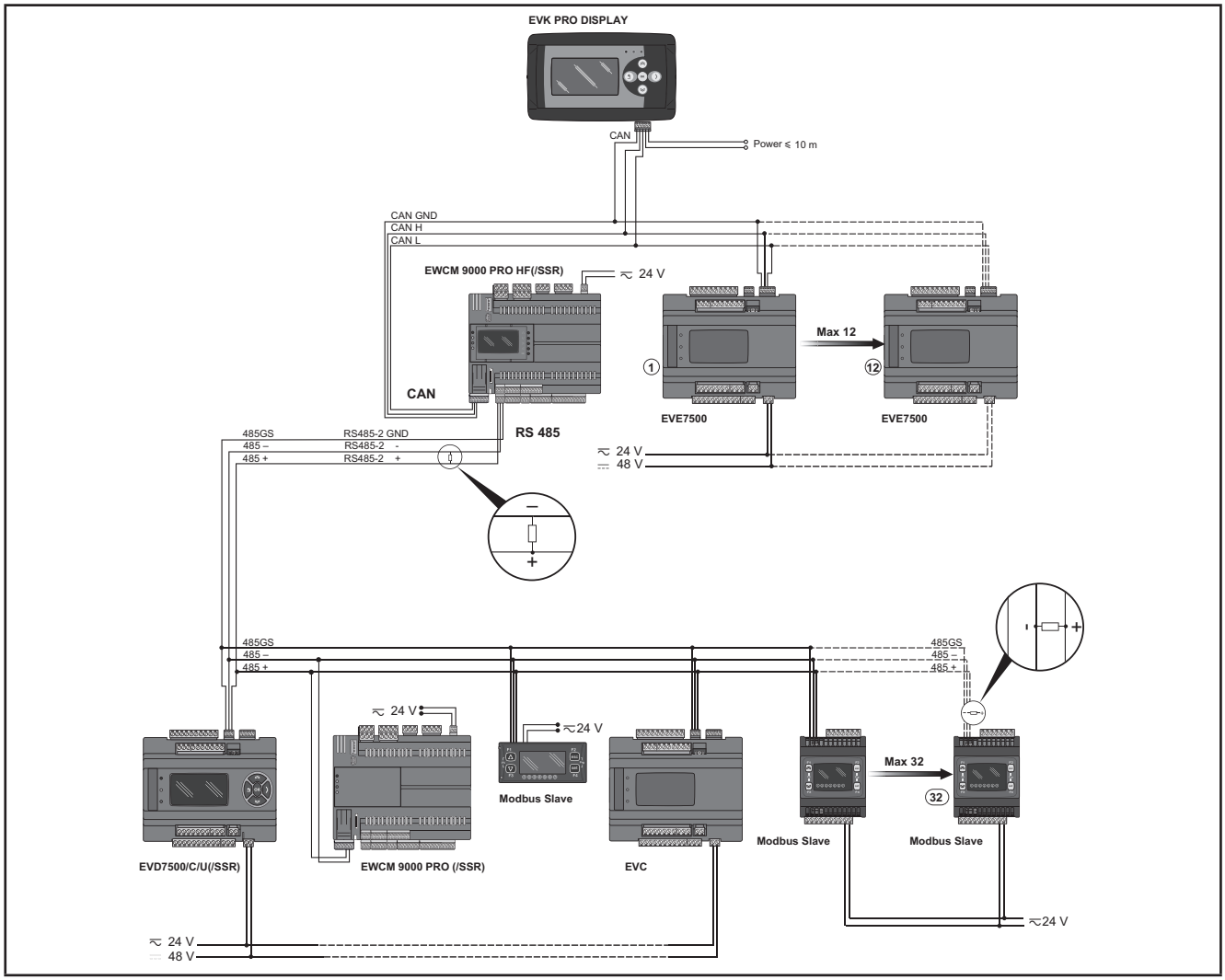

Fig. 42. RS 485 connection via EWCM 9000 PRO (HF)

3.7.5. Example: Connection on CAN expansion bus (Network)

A connection on CAN expansion bus (Network) may consist of:
- 1 **EWCM 9000 PRO EWCM 9000 PRO 42D (/SSR)**
- Maximum 10 **EWCM 9000 PRO 42B** connected in binding (1) on the CAN expansion bus
- 1 **EVK PRO DISPLAY** graphic display connected on the CAN expansion bus to **EWCM 9000 PRO 42D (/SSR)**

(1) For more details of the binding function, refer to the software **FREE Studio** (**v.3.9.1.2 o successiva), FREE Studio Plus (v.1.0.0)**, Programming Guide.

The **EVK PRO DISPLAY graphic display** is powered externally.

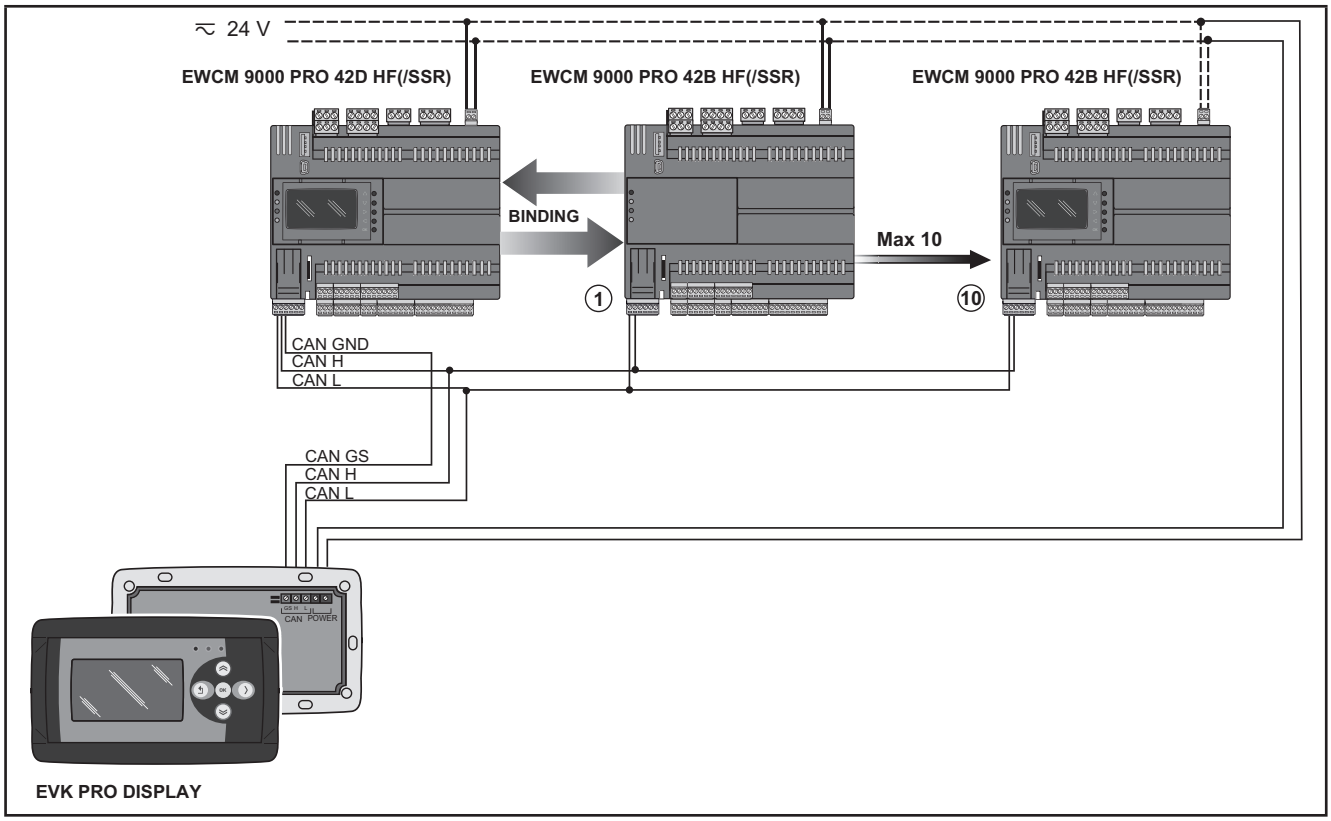

Fig. 43. Connection on CAN expansion bus (Network) via EWCM 9000 PRO

3.8. Ethernet connection

The Ethernet connection also allows communication via HTTP protocol, i.e. access to a Web Server contained in **EWCM 9000 PRO-HF** (see **Fig. 97 on page 269**: Ethernet port CN20)**.**

3.8.5.1. HTTP WEB SERVER

FREE Studio (v.3.9.1.2 or greater), FREE Studio Plus (v.1.0.0) is used to create and manage web pages in an **HTTP WEB SERVER**, i.e. a miniature website.

WEB functionalities can be used to create a local or remote access solution by way of a normal browser. With an Internet connection, the system provides, reading, assistance and diagnostic services, and sends alarm notices via e-mail.

Main WEB functionalities:
- Access via Web browser.
- Remote reading and support.
- Local and remote system control, including alarms management.
- Preventive and predictive maintenance.
- Email alarm alerts.

Pay attention and take all precautions when using this product as a control device to avoid unforeseen consequences deriving from the operation of the controlled machine, variations in the controller state or modification of the data memory or machine operating parameters.

⚠ WARNING

INCORRECT OPERATION OF THE DEVICE

- Configure and install the mechanism enabling the remote HMI interface locally on the machine, to maintain local control over the machine whatever remote controls are sent to the application.
- Before trying to remotely control the application you must be fully familiar with the application and the machine.
- Take all precautions required to ensure the foreseen remote control of the machine, producing clear documentation for identification in the application and of the respective remote connection.

Failure to follow these instructions can result in death, serious injury, or equipment damage.

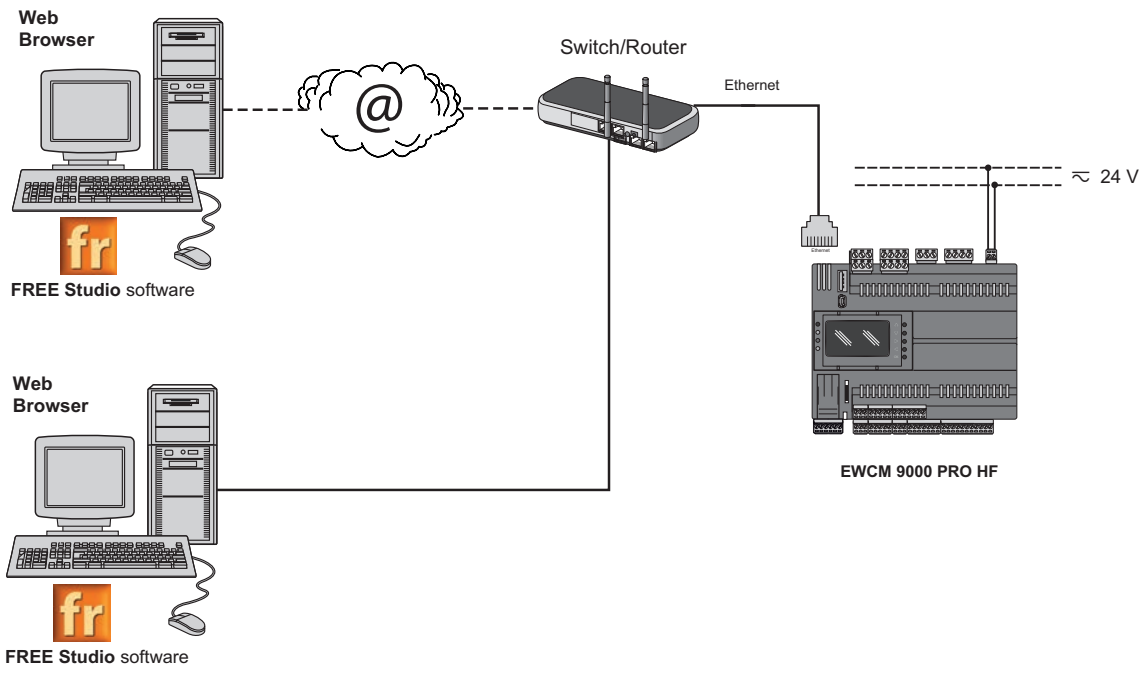

Fig. 44. HTTP WEB SERVER via EWCM 9000 PRO-HF

3.8.5.2. BRIDGE

FREE Studio (v.3.9.1.2 or greater) / FREE Studio Plus (v.1.0.0) is used to monitor Eliwell or third party instruments, generally Modbus/RTU slaves, where **WEB SERVER HTTP** (or **EWCM 9000 PRO-HF**) is the Modbus/RTU master.

In a **FREE Studio (v.3.9.1.2 or greater) / FREE Studio Plus (v.1.0.0)** project, **WEB SERVER HTTP** is used as a protocol conversion element from Modbus/TCP to Modbus/RTU for Modbus controls 0x03 and 0x10.

From **FREE Studio (v.3.9.1.2 or greater) / FREE Studio Plus (v.1.0.0)**, set the connection with the Slave devices as Modbus/TCP, entering the IP address of the **WEB SERVER HTTP** and the Modbus/RTU address of the slave.

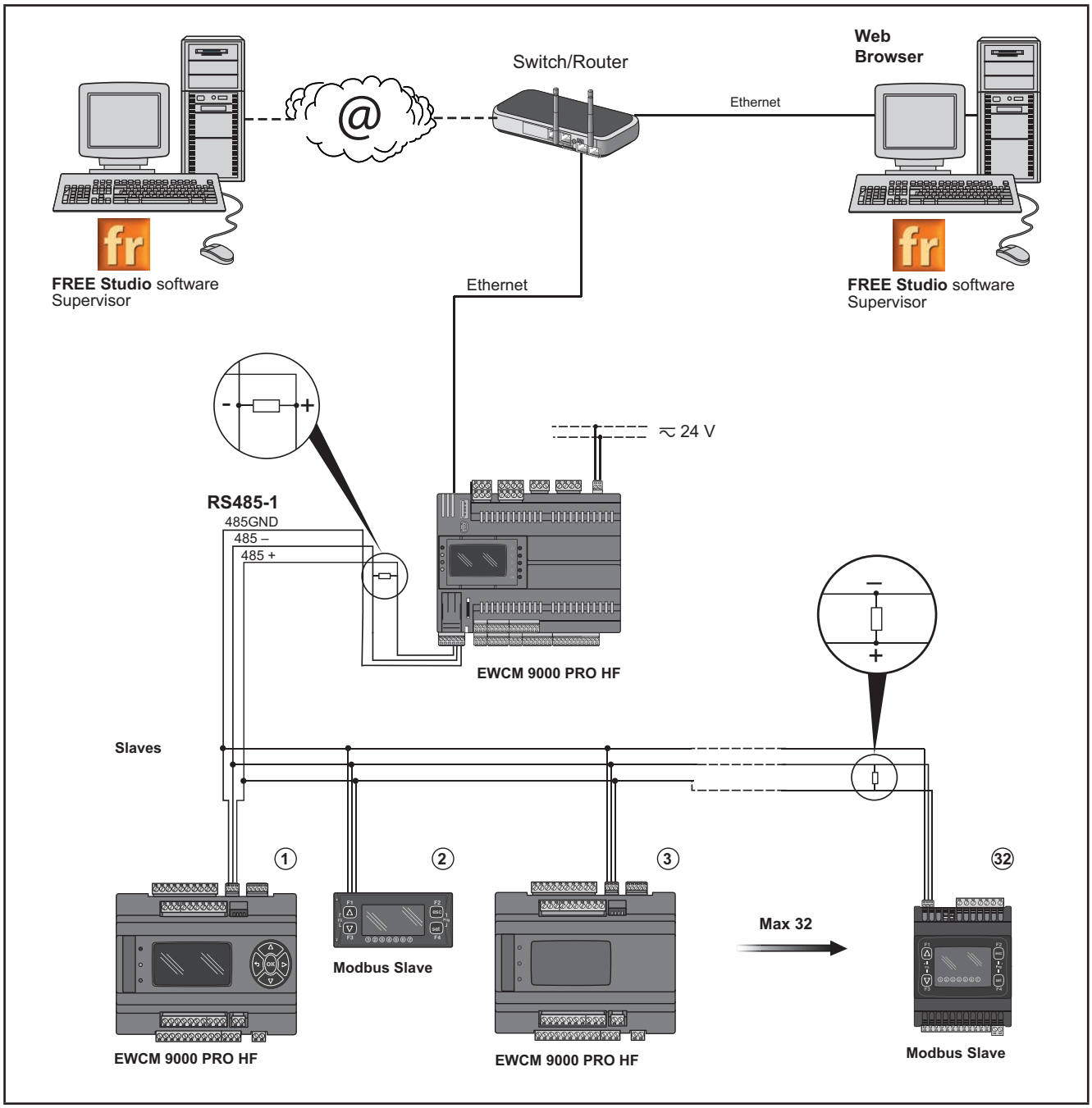

Fig. 45. BRIDGE via EWCM 9000 PRO-HF

3.8.1. Example: Binding TCP

VPN not necessary when using DynDNS connection.

Protocol	Field	Network
Modbus TCP	-	Maximum 4 **EWCM 9000 PRO** + 2 **EVK PRO DISPLAY graphic displays** Maximum number of Modbus messages = 128 / number of **EWCM 9000 PRO** connected Example: 128 / 4 **EWCM 9000 PRO** connected Maximum number of Modbus messages ➔ 128/4 ➔ 32

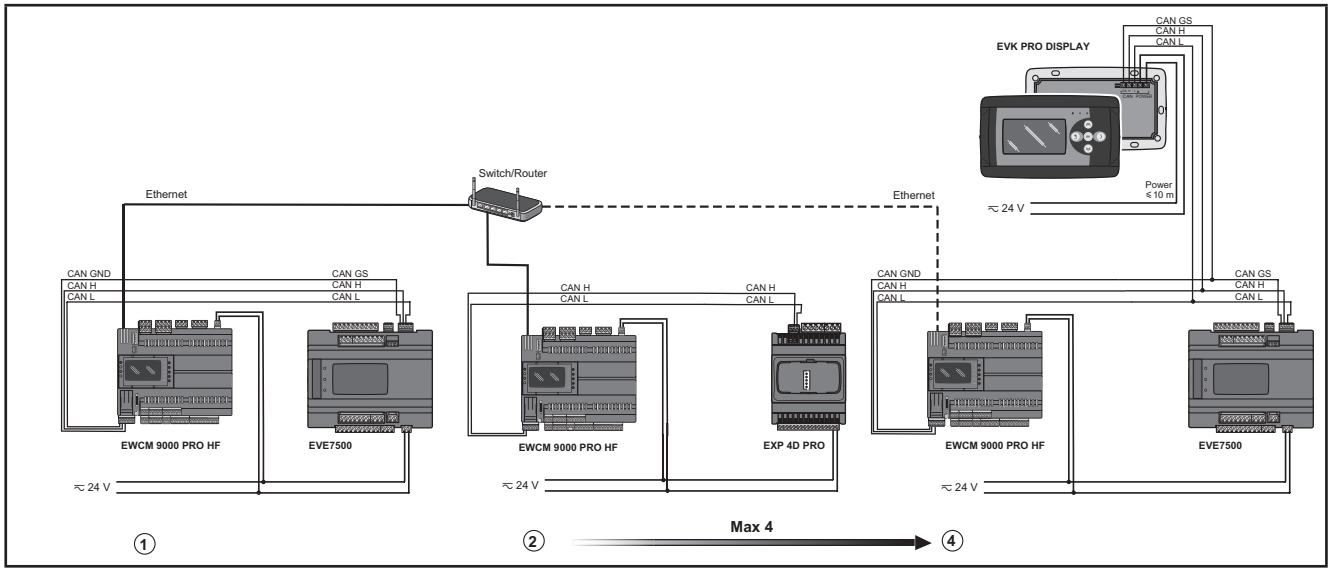

Fig. 46. Modbus TCP protocol via the Ethernet port of the EWCM 9000 PRO

CHAPTER 4
Technical data

All components in the **EWCM 9000 PRO (HF) CO2 compressor rack controllers** system meet the European Community (CE) requirements for open devices. They must be installed in a casing or other designated place to suit the environmental conditions and minimise the risk of involuntary contact with high voltages. Use metal casings to improve the immunity to electromagnetic fields of the **EWCM 9000 PRO (HF) CO2 compressor rack controllers**. This device meets the CE requirements indicated in the table below.

The application of incorrect current and voltage values to the analogue inputs and outputs may damage the electronic circuits. Moreover, connecting a current input of a device to an analogue input configured for voltage and vice versa will also damage the electronic circuits.

NOTICE

INOPERABLE DEVICE

- Do not apply voltages over 11 V to the controller analogue inputs or the input/output expansion module when the analogue input is configured as a 0...5 V or 0...10 V input.
- Do not apply currents over 30 mA to the controller analogue inputs or the input/output expansion module when the analogue input is configured as an input 0...20 mA or 4...20 mA.
- Make sure that the signal applied corresponds to the analogue input configuration.

Failure to follow these instructions can result in equipment damage.

4.1. Environmental and electric characteristics

	Standard	range
Power voltage **EWCM 9000 PRO (HF)**	+24 Vac / Vdc ±10% Non-isolated	-
Power voltage **EXP 4D PRO**	+24 Vac / Vdc ±10% Non-isolated	-
Power voltage **EVK PRO DISPLAY**	powered externally	-
Power supply frequency	50 Hz / 60 Hz	-
Absorbed power **EWCM 9000 PRO (HF)**	35 VA / 15 W	-
Absorbed power **EXP 4D PRO**	15 VA / 7 W	-
Absorbed power **EVK PRO DISPLAY**	5 W	-
Insulation class	2	-
Operating temperature for models **EWCM 9000 PRO (HF)**/SSR	25 °C / 77 °F	-20 ... 55 °C / -4 ... 131 °F
Operating temperature for all other models **EWCM 9000 PRO (HF)**	25 °C / 77 °F	-20 ... 65 °C / -4 ... 149 °F (1)
Operating temperature of **EXP 4D PRO**	25 °C / 77 °F	-10 ... 55 °C / 23 ... 131 °F
Operating temperature of **EVK PRO DISPLAY**	25 °C / 77 °F	-5 ... 55 °C / 14 ... 131 °F
Operating environment humidity (with no condensation)	30%	5 ... 95%
Storage temperature	25 °C / 77 °F	-30 ... 70 °C / -22 ... 158 °F
Storage environment humidity (with no condensation)	30%	5 ... 95%

(1) For **EWCM 9000 PRO**, the ambient operating temperature is limited to 60°C / 140 °F when DO8 is on.

If the current limits within the specified temperature interval are not maintained, the products may malfunction, be damaged or stop working.

⚠ WARNING

INCORRECT OPERATION OF THE DEVICE

Do not exceed any of the nominal values specified in the environmental and electric characteristics tables.

Failure to follow these instructions can result in death, serious injury, or equipment damage.

NOTE: When powered from **EWCM 9000 PRO (HF) CO2 compressor rack controllers**, reduce the length of the power cables as much as possible.

NOTICE

INOPERABLE DEVICE

Do not connect to power cables longer than 10 m (32.80 ft.).

Failure to follow these instructions can result in equipment damage.

Technical Data	
The product also complies with the following harmonized standards:	EN 60730-2-9 / EN 60730-1
Construction of control	Electronic automatic Incorporated Control
Purpose of control	Operating control (not safety related)
Type of action	1.B Relay Output – 1 SSR Output
Pollution degree	2
Overvoltage category	II
Rated pulse voltage	2500 V
Power Supply not insulated	24 Vac, 50/60 Hz, or 24 Vdc, Class 2 or SELV power source (100 W or VA)
Power draw	35 VA / 15 W
Loads	SPST: DO1, DO2, DO3, DO4, DO5, DO6, DO7, DO9, DO10, DO11: 3 A 250 Vac, Resistive - 2FLA / 12LRA, 250 Vac at -20...65 °C (-4...149 °F) SPDT: DO8 3 A 240 Vac, Resistive at -20...55 °C (-4...131 °F) or 1 A 240 Vac, Resistive at -20...60 °C (-4...140 °F) NOT USED AT -20...65 °C (-4...149 °F) SPDT: DO12 - 3 A 240 Vac, Resistive at -20...55 °C (-4...131 °F) or 1 A 240 Vac, Resistive at -20...65 °C (-4...149 °F) SSR: DO1 - DO2 0.5 A 75...240 Vac, General Use or Resistive, 0.2 FLA / 1.2 LRA 240 Vac at -20...65 °C (-4...149 °F)
Ambient operating conditions	See temperature limits according to the loads
Transportation and storage conditions	-30 ... 70 °C (-22 ... 158 °F) 5…95% RH (non-condensing)
Software class and structure	A
Environmental front panel rating	Open Type
Realtime Clock RTC	Built-in
Display type	Backlit LCD - 128 x 64 pixels
LED	4 LEDs
External memory	Micro SD max 16 GB

4.2. Characteristics of EWCM 9000 PRO (HF) (/SSR)

Characteristics of **EWCM 9000 PRO (HF)** concerning inputs and outputs.

I/O	Label	Description	Devices
2 DIGITAL INPUTS FAST	**DI1, DI2**	2 optoisolated digital inputs (Pulse count + Read frequency) Note: measures a signal with maximum frequency 2 kHz Digital inputs can be used as pulse counters. The length of the pulse (both positive or negative) must be greater than 0.15 ms.	**All models**
10 DIGITAL INPUTS NORMAL SELV	**DI3, DI4, DI5, DI6, DI7, DI8, DI9, DI10, DI11, DI12**	10 optoisolated digital inputs Operating voltage +24 Vac/dc. Max. absorbed current 5 mA Digital inputs can be used as pulse counters. The length of the pulse (both positive or negative) must be greater than 20 ms (if DI3, DI4) or 40 ms (if DI5, DI6, DI7, DI8, DI9, DI10, DI11, DI12)	
12 DIGITAL OUTPUTS RELAY WITH DANGEROUS VOLTAGE	**DO1, DO2, DO3, DO4, DO5, DO6, DO7, DO9 DO10, DO11**	10 3 A SPST 250 Vac relays Resistive Load	**All models without SSR**
	DO8, DO12	2 1 A SPDT 240 Vac relays Resistive Load	
10 DIGITAL OUTPUTS RELAY WITH DANGEROUS VOLTAGE + 2 DIGITAL SSR OUTPUTS WITH DANGEROUS VOLTAGE (1)	**DO3, DO4, DO5, DO6, DO7, DO9, DO10, DO11**	8 3 A SPST 250 Vac relays Resistive Load	**SSR Models**
	DO8, DO12	2 1 A SPDT 240 Vac relays Resistive Load	
	DO1, DO2	2 SSR 0.5 A 240 Vac General Use or Resistive Load D150 AC Pilot Duty, 1.2LRA/0.2FLA-240Vac	
12 ANALOGUE INPUTS	**AI1, AI2, AI3, AI4, AI5, AI6, AI7, AI8, AI9, AI10, AI11, AI12**	See table in **"4.3.1. Analogue input characteristics" page 70**	**All models**
6 ANALOGUE OUTPUTS SELV	**AO1, AO2, AO5, AO6**	4 outputs (Voltage modulation **0...10 V**) Range: 0...1000 Accuracy: ±2% f.s. Resolution: 1 digit Load impedance: > 700 Ω	**All models**
	AO3, AO4	2 configurable outputs: • Current modulation **4...20 mA**, • ON-OFF current: the (ON) current is 23 mA, the (OFF) current is 0 mA • Voltage modulation **0...10 V**, Range: 0...1000 Accuracy: 1% f.s. Resolution: 1 digit Load impedance: > 700 Ω • PWM mode: Frequency from 1 Hz to 2000 Hz (resolution 1 Hz), Duty Cycle from 0.0% to 100.0% (resolution 0.1%) Open Collector output, 30 mA, +24 Vdc max. Characteristics of two analogue configurations: see table in **"4.3.2. I/O characteristics of EXP 4D PRO" page 71**	

(1) Double isolation between each digital output and the rest of the controller

4.3. Analogue characteristics

4.3.1. Analogue input characteristics

Analogue input type	Range	Accuracy (1)	Accuracy	Resolution	Impedance input
NTC (NK103) 10 kΩ at 25 °C BETA value 3977	-40...+137 °C (-40... +278.6 °F)	±0,5% f.s. + 1 digit	-40...+110 °C (-40... +230 °F)	0.1 °C	10 kΩ
		±1% f.s. + 1 digit	+110...+137 °C (+230... +278.6 °F)		
DI (no voltage digital input)	-	-	-	-	10 kΩ
NTC (103AT-2) 10 kΩ at 25 °C BETA value 3435	-50...+110 °C (-58...+230 °F)	±0.5% + 1 digit	-	0.1 °C	10 kΩ
Pt1000	-200...+850 °C (-328... 1562 °F)	±10% + 1 digit	-200...-100 °C (-328... -148 °F)	0.1 °C	2 kΩ
		±5% + 1 digit	-100...-51 °C (-148... -59.8 °F)		
		±1% + 1 digit	-50...+100 °C (-58... +212 °F)		
		±0.8% + 1 digit	+101...+400 °C (+213.8... +752 °F)		
		±2.2% + 1 digit	+401...+850 °C (+753.8... +1562 °F)		
PTC (KTY81)	-55...+150 °C (-67... 302 °F)	±0,5% f.s. + 1 digit	-	0.1 °C	2 kΩ
0...20 mA 4...20 mA	0...1000	±1% f.s. + 1 digit	4...20 mA	1 digit	< 150 Ω
		±2% f.s. + 1 digit	0...4 mA		
0...10 V	0...1000	±1% f.s. + 1 digit	-	1 digit	> 10 kΩ
0...5 V	0...1000	±1% f.s. + 1 digit	-	1 digit	> 20 kΩ
0...5 V Ratiometric (2)					
hΩ (NTC)	0...1500 hΩ	±0.5% f.s. + 1 digit	-	1 hΩ	10 kΩ
daΩ (Pt1000)	0...300 daΩ	±0.5% f.s. + 1 digit	-	1 daΩ	2 kΩ

(1) Full scale precision or relative to the range indicated in the column Precision range where pertinent.
(2) 0...5 V ratiometric: the ratiometric range is from 0.5 V to 4.5 V. The maximum current at 5 V is 50 mA.

Analogue inputs configured as digital inputs are non-isolated.

NOTICE

INCORRECT INPUT WIRING IN NON-ISOLATED INPUTS

On analogue inputs configured as digital inputs, use only clean contact type inputs.

Failure to follow these instructions can result in equipment damage.

For more information refer also to **"6.1. Configuration of analogue inputs" page 88**.

4.3.2. I/O characteristics of EXP 4D PRO

Characteristics of **EXP 4D PRO** concerning inputs and outputs.

Type and Label	No.	Description
Digital input **DI1…DI4**	**4**	4 digital input Non-isolated Operating voltage 24 Vac / Vdc ±10% (Vac: max. 38 Vac) Max. absorbed current 5 mA
Relay digital outputs High voltage **DO1...DO4**	**4**	1 SPDT 3 A 240 Vac relay 3 SPST 3 A 240 Vac relays (common maximum 10 A) Resistive Load
Analogue outputs **AO1…AO2**	**2**	2 0...10 V outputs: 4% f.s. Min. load 5 kΩ; 2% integral scale with load greater than 5 kΩ
Analogue inputs **AI1 AI2** **AI3 AI4**	**4**	See following table

	NTC (NK103) 10 kΩ at 25 °C (77 °F) BETA value 3977	DI (1)	NTC (103AT-2) 10 kΩ at 25 °C (77 °F) BETA value 3435	4...20 mA	0...10 V
AI1	✓	✓	✓	-	-
AI2	✓	✓	✓	-	-
AI3	✓	✓	✓	✓	✓
AI4	✓	✓	✓	✓	✓
Range	-40…+137 °C (-40...+278.6 °F)	-	-50°...+110 °C (-58...230 °F)	0...1000	0...1000
Accuracy	0.5% f.s. + 1 digit	-	0.5% f.s. + 1 digit	1% f.s. + 1 digit	1% f.s. + 1 digit
Resolution	0.1 °C	-	0.1 °C	1 digit	1 digit
Input impedance	10 kΩ	10 kΩ	10 kΩ	<200 Ω	>10 kΩ

(1) DI input: no voltage digital input.

	0...5 V (1)	Pt1000	hΩ (NTC)	daΩ (Pt1000)	PTC (KTY81)
AI1	-	-	-	-	✓
AI2	-	-	-	-	✓
AI3	✓	✓	✓	✓	✓
AI4	✓	✓	✓	✓	✓
Range	0...1000	-200...+295 °C (-328...+563 °F)	0...150 kΩ	0…30 kΩ	-50 °C ...+150 °C (-58...+302 °F)
Accuracy	1% f.s. + 1 digit	0.5% f.s. + 1 digit	1% f.s. + 1 digit	1% f.s. + 1 digit	0.5% f.s. + 1 digit
Resolution	1 digit	0.1 °C	1 hΩ	1 daΩ	0.1 °C
Input impedance	>20 kΩ	2 kΩ	10 kΩ	2 kΩ	2 kΩ

(1) Ratiometric. 50 mA of maximum current at 5 V

See also **“6.1. Configuration of analogue inputs” page 88** for offset and calibration instructions.

4.3.3. Analogue output characteristics

Type of analogue output	Range	Accuracy	Resolution	Load impedance
Voltage modulation **0...10 V**	0...1000	±2% f.s.	1 digit	≥ 700 Ω
Current modulation **4...20 mA**	0...1000	±2% f.s.	1 digit	≤ 450 Ω

4.4. Display

EWCM 9000 PRO 42D (/SSR) versions are equipped with graphic b/w LCD display, 128x64px
- backlit with LEDs
- 4 LEDs

LED and backlighting can be controlled from the controller application.

For more information refer to **“CHAPTER 5” “User interface” page 82**.

4.4.1. EVK PRO DISPLAY

Display	LCD graphic display 128x64 px b/w, backlit with LED
Container	Backplate + surround in PC+ABS UL94 V-0 plastic resin, front cover in transparent polycarbonate, polyester membrane keys

4.5. Serial ports

Serial	Description	Notes
CAN	CAN expansion bus	maximum 50 m at 500 kpbs; 200 m at 125 kpbs
		Apply a 120 Ohm termination resistance to both ends of the line between the first and last network element. When using EVK PRO terminals as the first/last network element, the resistances are already on board. When using EXP 4D PRO expansions as the first/last network element, use the relative DIP Switches.
RS 485	2 RS 485 serials	If the controller is connected at the end of the RS 485 communication line, apply a 120 Ω terminal resistor between the “+” and “-” line on the RS 485
		It is possible to configure only one RS 485 port at a time as Modbus master.
USB	1 USB female connector type A (Host)	‘Mass Storage’ profile External memory, formatted **FAT32** For more information refer to **“4.5.1. USB Ports” page 73**.
	1 female type B mini USB connector (Device)	Connection between PC and peripheral via CDC standard USB profile. For more information refer to **“4.5.1. USB Ports” page 73**.
ETHERNET	Modbus TCP ETHERNET port	**EWCM 9000 PRO** includes MACADDRESS, in bar code format and 12 alpha-numeric digits. For more information refer to **“4.5.2. Ethernet Port” page 74.**

For more information refer to **“10.3.6.1. Example of data logger file” page 264**.

Pay special attention when connecting serial lines. Incorrect wiring may cause the device to stop working.

NOTICE
INOPERABLE DEVICE • Do not connect apparatus which communicates via RS485 serial port to CAN expansion bus terminals. • Do not connect apparatus which communicates via CAN expansion bus to RS 485 terminals. **Failure to follow these instructions can result in equipment damage.**

4.5.1. USB Ports

USB type	Purpose	Note
type A USB connector **A (HOST)** **(1)**	Used to connect a USB memory stick when downloading the application. This must be done from the controller keyboard (versions **EWCM 9000 PRO 42D (/SSR)**) or from the **FREE Evolution graphic display** (versions **EVK PRO DISPLAY**) (**EWCM 9000 PRO 42B**).	-
Type B mini USB connector **Mini-B (DEVICE)** **(2)**	Used to connect **EWCM 9000 PRO (HF)** to a PC via a cable with type B mini USB connectors for debugging, put into service, downloading and uploading with **FREE Studio (v.3.9.1.2 or greater) / FREE Studio Plus (v.1.0.0)**: **EWCM 9000 PRO** seen as a virtual COM port. Serial communication with a CDC profile (standard USB).	Compatible with the following operating systems: • Windows Vista Business x86 + x64 (Service Pack 2) • Windows 7 x86 + x64 (Service Pack 1) • Windows 8 / 8.1 x86 + x64 • Windows 10 • Windows Server 2008, SP2, and R2 • Windows Server 2012 and R2 The driver is supplied with the software **FREE Studio (v.3.9.1.2 or greater) / FREE Studio Plus (v.1.0.0).**

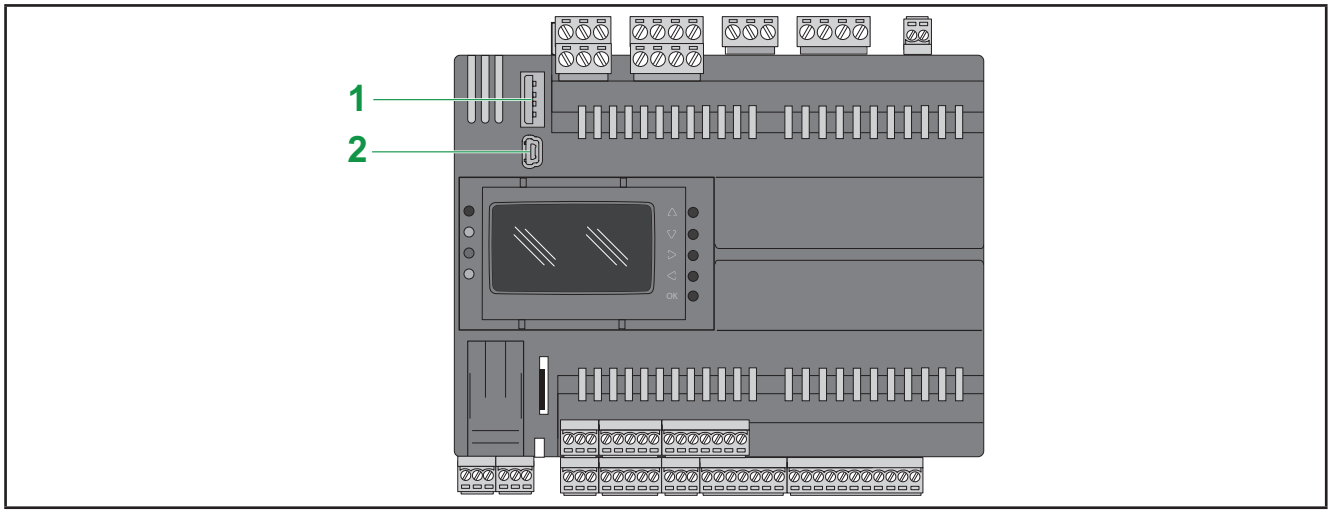

Fig. 47. EWCM 9000 PRO (HF): USB type A and mini USB type B

4.5.2. Ethernet Port

EWCM 9000 PRO (HF) CO2 compressor rack controllers have an Ethernet communication port.
In **Fig. 3 on page 17** the position of the Ethernet port is shown for **EWCM 9000 PRO (HF)** CO2 compressor rack controllers.

Features

The following table describes the Ethernet characteristics:

Feature	Description
Protocol	Modbus TCP/IP
Connector type	RJ45
Driver	10 M / 100 M with automatic negotiation
Cable type	Screen
Automatic detection of crossed cable	Yes

Pin allocation

Fig. 48 on page 74 illustrates the pin allocation of the Ethernet RJ45 connector.

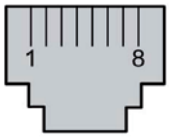

Fig. 48. Pin allocation

The following table describes the Ethernet RJ45 connector pins:

Pin no.	Segnale
1	TD+
2	TD-
3	RD+
4	-
5	-
6	RD-
7	-
8	-

NOTE: The controller supports the MDI/MDIX automatic cable crossing function. It is not necessary to use specific crossed Ethernet cables to connect the devices directly to this port (connections without hub or Ethernet switch).

status LEDs

The following figures show the status LEDs of the connector RJ45:

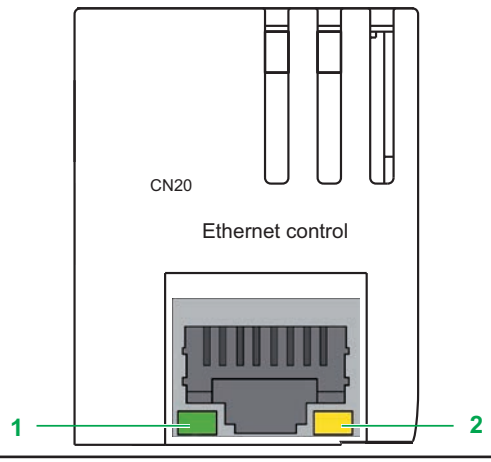

Fig. 49. status LED

The following table describes the Ethernet status LEDs.

Label	Segnale	LED		
		Colour	Resource	Description
1: ACT	Ethernet activity	Green	Off	No activity
			Blinking	Assets
2: LINK	Ethernet connection	Green / Yellow	Off	No connection
			On (yellow)	Connection speed: 10 Mb
			On (green)	Connection speed: 100 Mb

4.6. Battery flap

EWCM 9000 PRO (HF) CO2 compressor rack controllers have a removable door (see 1 in **Fig. 50 on page 75**) located on the lower left-hand side of the front panel. A battery compartment and 5-pole male connector (reserved) can be found behind the flap. To replace the internal battery, contact the Eliwell technical support department.

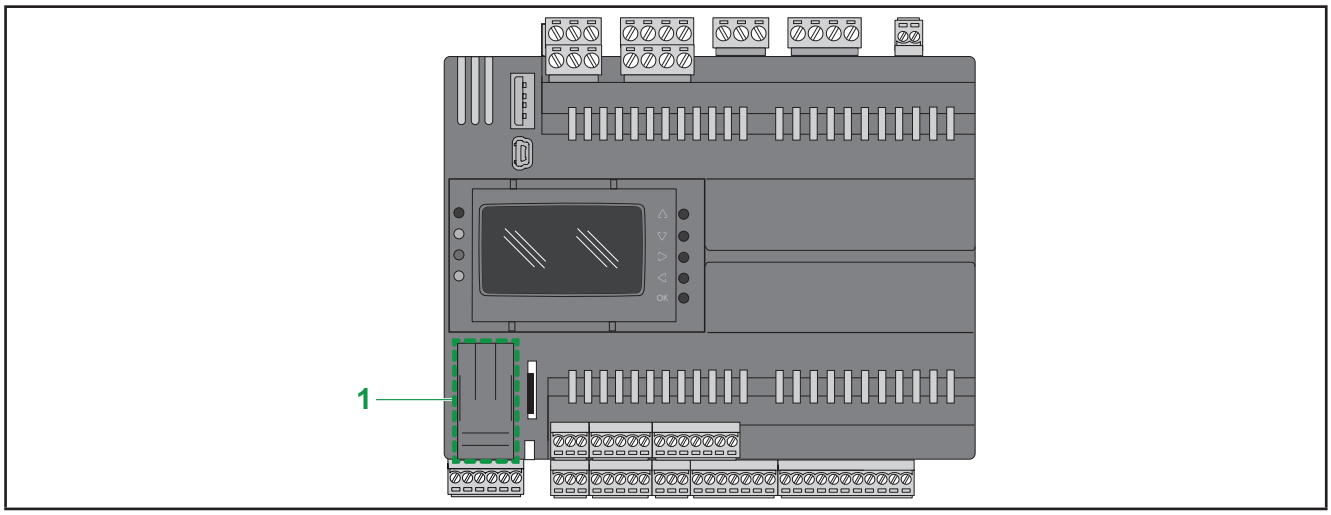

Fig. 50. EWCM 9000 PRO (HF): Battery flap

⚠ WARNING

COMPONENT NOT TO BE REPLACED BY THE USER

Do not attempt to replace the battery without qualified Eliwell staff

Failure to follow these instructions can result in death, serious injury, or equipment damage.

4.7. Memory capacity

EWCM 9000 PRO (HF) CO2 compressor rack controllers store data in two different ways:
- internal memory (refer to **"4.7.1. Internal memory" page 75**);
- external memory (via a slot housing an external memory card) (refer to **"4.7.2. External memory" page 76**).

4.7.1. Internal memory

EWCM 9000 PRO (HF) CO2 compressor rack controllers have the following memory capacities.

Capacity	Type of
512 kB	Flash
96 kB	RAM
8 MB	NOR flash
32 MB	SDRAM

4.7.2. External memory

EWCM 9000 PRO (HF) CO2 compressor rack controllers are equipped with a memory card slot (see 1 in **Fig. 51 on page 76**) for micro SD cards, used in some cases to expand the internal memory.

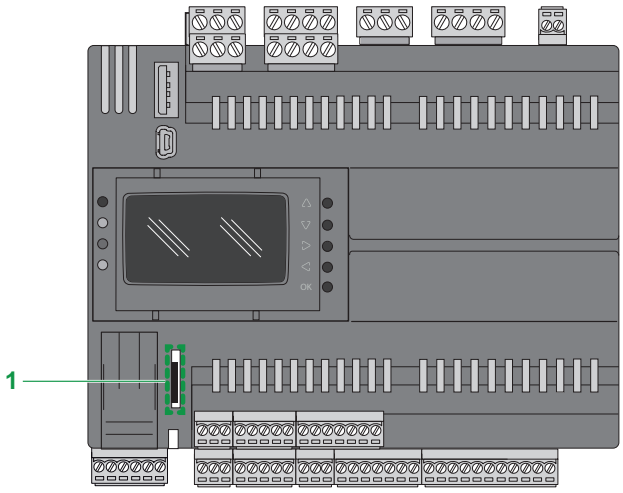

Fig. 51. EWCM 9000 PRO (HF): Memory card slot

Compatibility with UHS-I cards has been tested.
Do not use UHS-II cards.
Maximum memory capacity tested: 16 GB.

When handling the micro SD card, follow the instructions given below to avoid corruption or loss of data inside the micro SD card or a card malfunction:

NOTICE

INOPERABLE DEVICE

- Do not store the micro SD card where there is static electricity or where it can be exposed to electromagnetic fields.
- Do not place the micro SD card in direct sunlight, near a heater or in other places exposed to high temperatures.
- Do not bend the micro SD card.
- Do not drop the micro SD card or knock it against other objects.
- Keep the micro SD card dry.
- Do not touch the connectors on the micro SD card.
- Do not disassemble or modify the micro SD card.
- Use only FAT32 formatted micro SD cards.

Failure to follow these instructions can result in equipment damage.

The **EWCM 9000 PRO (HF)** CO2 compressor rack controller does not recognise micro SD cards formatted as NTFS. Format the micro SD card on the computer in FAT32 mode.

When using the **EWCM 9000 PRO (HF) CO2 compressor rack controller** and a micro SD card, follow the instructions below to avoid loss of precious data:

- Accidental loss of data may occur at any time. Once lost, the data cannot be recovered.
- Removing the micro SD card by force may corrupt the data stored.
- Removal of a micro SD card while access to data is in progress may damage the micro SD card or corrupt the data.
- If the micro SD card is not positioned correctly when inserted in the controller, the data in the card and in the controller could be damaged.

NOTICE

LOSS OF APP DATA

- Back up the data on the micro SD card regularly.
- Do not switch off the power or reset the controller and do not insert or remove the micro SD card during access to data.
- Become familiar with the correct position of the micro SD card when inserting it in the controller.

Failure to follow these instructions can result in equipment damage.

NOTE: When the Micro SD card is inserted correctly into the EWCM the yellow LED flashes.

Characteristics of the micro SD card slot

Topic	Features	Description
Type supported	Standard capacity	Micro SD
	High capacity	Micro SDHC
Overall memory	Dimensions	Maximum 32 GB
Speed	Classes	4...10
Memory organisation	Maximum file size	Maximum 4 GB
	Maximum number of files	Maximum 512 file (maximum indexing)
Resistance	of operating temperature	See characteristics supplied by the supplier of the micro SD for the value.
	Write/delete cycles (typical)	
	File retention time	

Characteristics of the micro SD card

For cards available on the market, consult the local sales representative.

4.8. Power supply

EWCM 9000 PRO (HF) CO2 compressor rack controllers and assigned devices must be powered at a rated voltage of 24 Vac / Vdc Power supplies/transformers must be SELV (Safety Extra Low Voltage) classified according to IEC 61140. These electrical power sources are isolated between the input and output electrical circuits of the power supply and are separated by ground (earth), PELV systems and other SELV systems.

⚠ ⚠ DANGER

RING GROUND CAUSING ELECTRICAL SHOCK AND/OR EQUIPMENT MALFUNCTION

- Do not connect the connection to 0 V (indicated by symbol "-" on the power connector) on the power supply/ transformer powering this device to an external earth connection (ground).
- Do not connect the connection to 0 V or earth (ground) on the sensors and actuators connected to this device (indicated as "GND" on the respective connector) to an external ground connection.
- If necessary, use separate power supplies/transformers to power the sensors and actuators isolated from this device.
- If necessary, use separate power supplies/transformers in a network of more than one **EWCM 9000 PRO (HF) / EXP 4D PRO**.

Failure to follow these instructions will result in death or serious injury.

If the voltage field specified is not maintained, or if the effective separation of the SELV circuit connected to the equipment in question is compromised, the products may not operate as planned or may become damaged and become unusable.

⚠ WARNING

POTENTIAL OF OVERHEATING AND FIRE

- Do not connect the equipment directly to mains power.
- Use only isolating SELV, Class 2 power supplies/transformers to supply power to the equipment.

Failure to follow these instructions can result in death, serious injury, or equipment damage.

The device must be connected to an appropriate power supply/transformer with the following characteristics:

Primary voltage	According to the requirements of the individual unit and/or the country of installation.
Secondary voltage	+24 Vac / Vdc
Power supply frequency Vac	50 / 60 Hz
absorbed power	35 VA max.

Use separate power supplies/transformers in a network of more than one **EWCM 9000 PRO (HF)**. See example with CAN network:

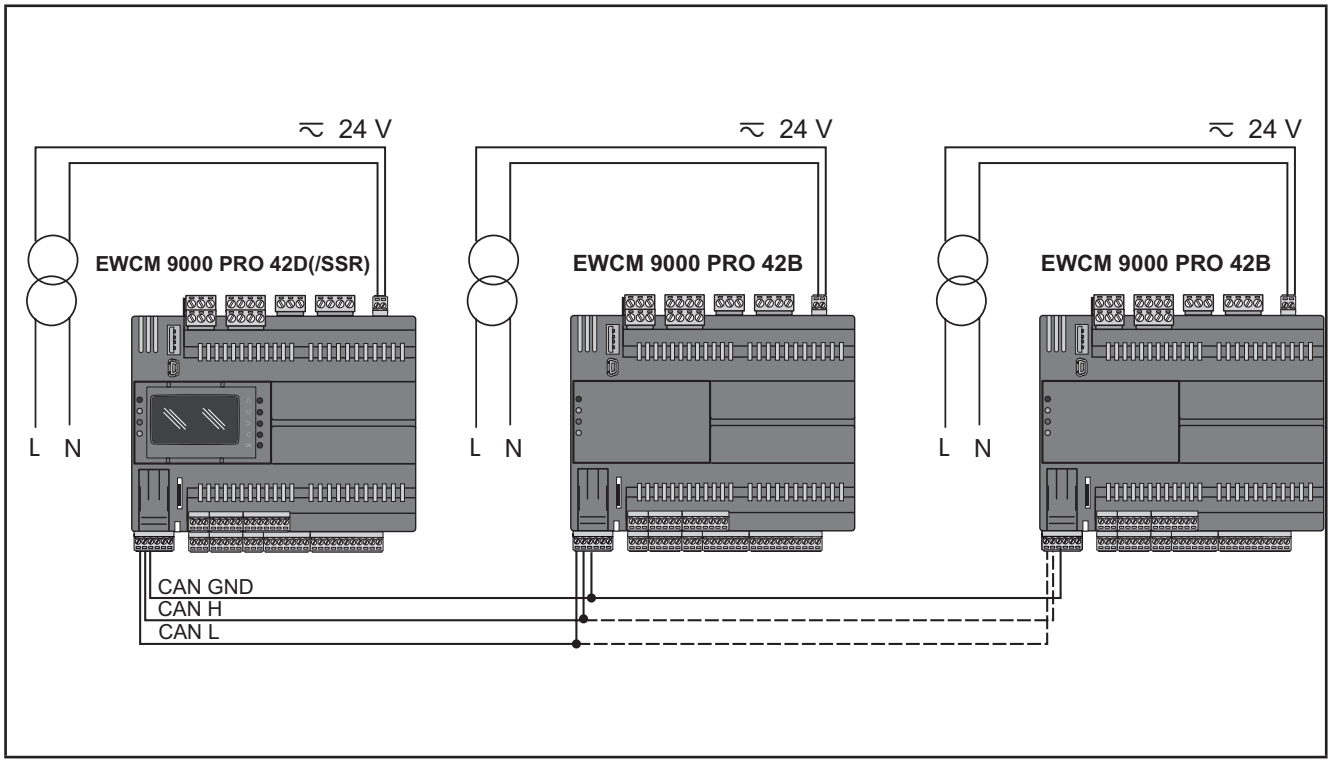

Fig. 52. EWCM 9000 PRO (HF): example of CAN network with separate power lines

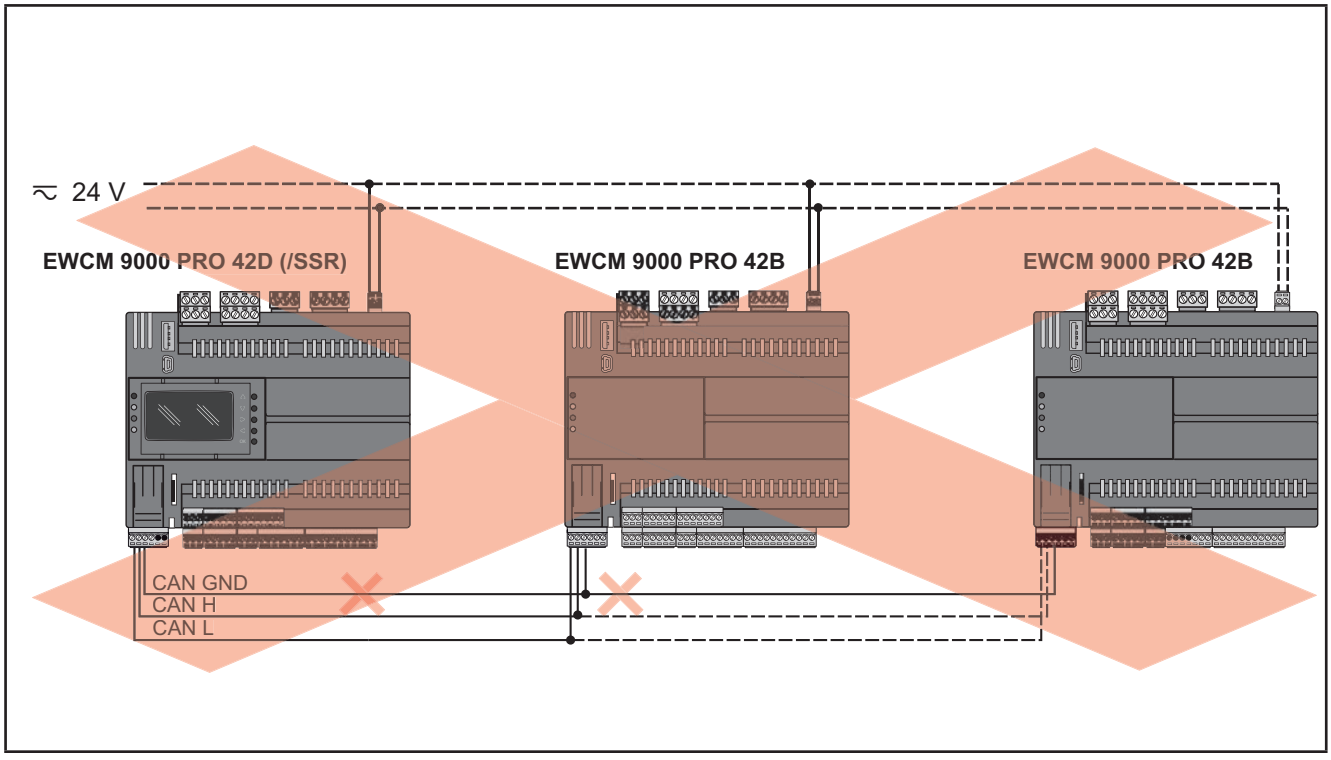

Fig. 53. EWCM 9000 PRO (HF): example of CAN network with ground signal to 0 V not connected

4.9. Mechanical dimensions

	Length mm in.	Depth mm in.	Height mm in.	Notes
EWCM 9000 PRO	144 5,67	60,5 2,38	110 4,33	
EXP 4D PRO	70 2,75	61,6 2,42	87 3,42	-
EVS communication module	35 1,38	61,6 2,42	110 4,33	-
EVK PRO DISPLAY	160 6,3	10 0,39	96 3,8	-
Opening for panel mounting of **EVK PRO DISPLAY**	138 5,43	-	68 2,68	(+ 0.2 mm / - 0.1 mm)

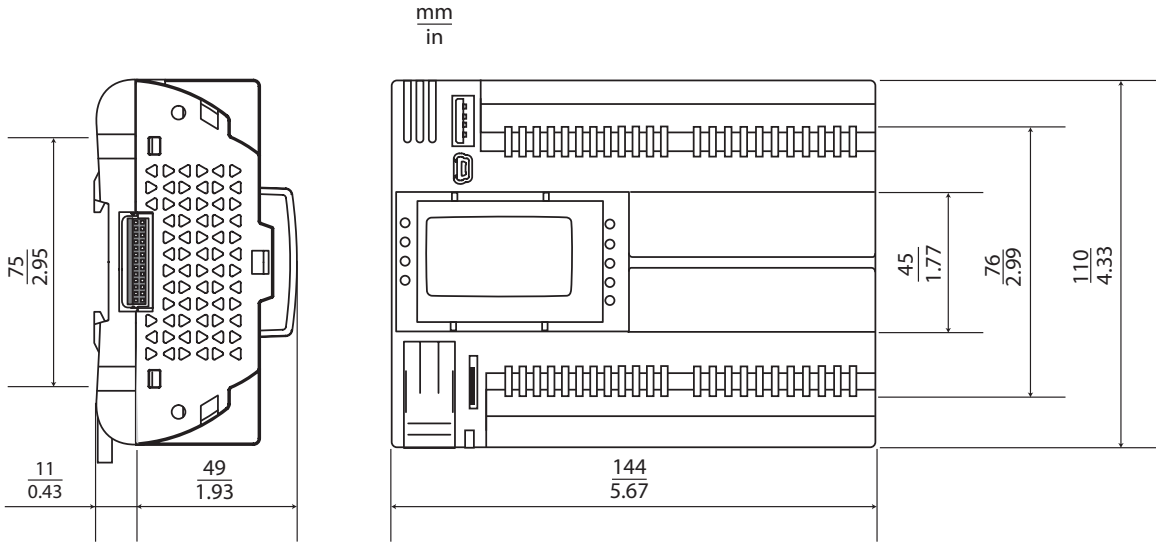

Fig. 54. Mechanical dimensions

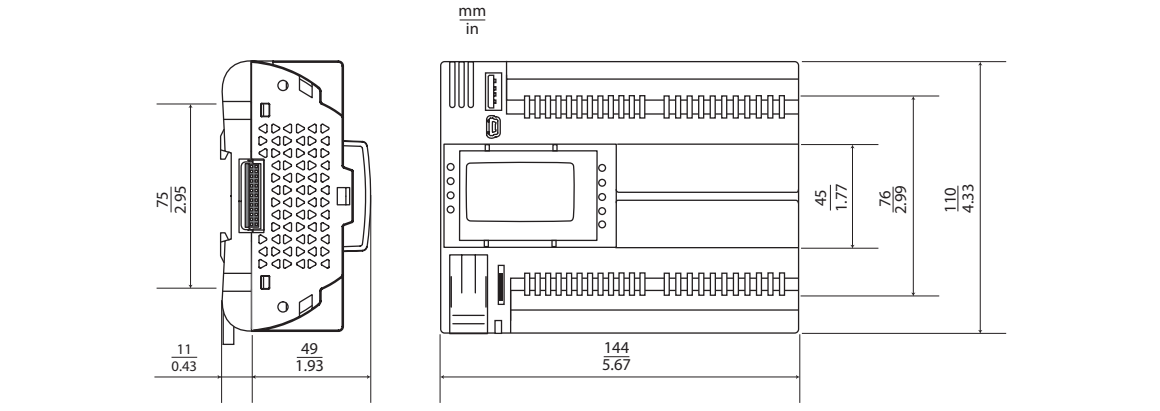

Fig. 55. EWCM 9000 PRO (HF)

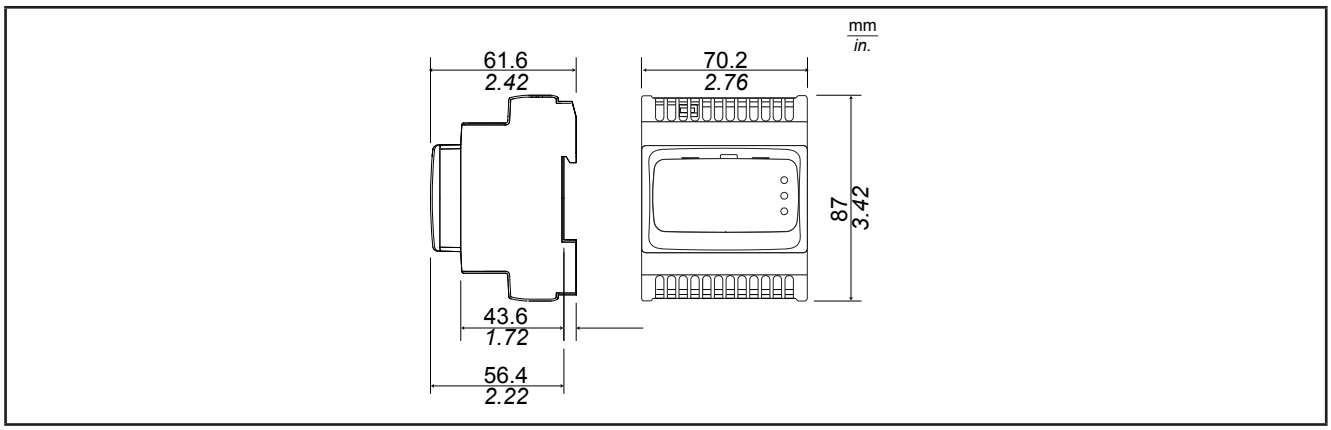

Fig. 56. EXP 4D PRO

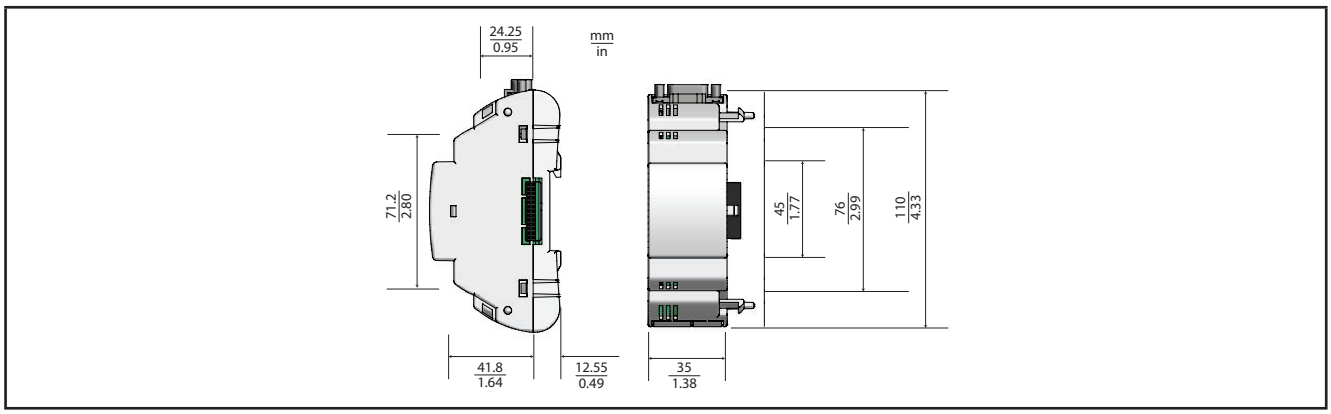

Fig. 57. EVS

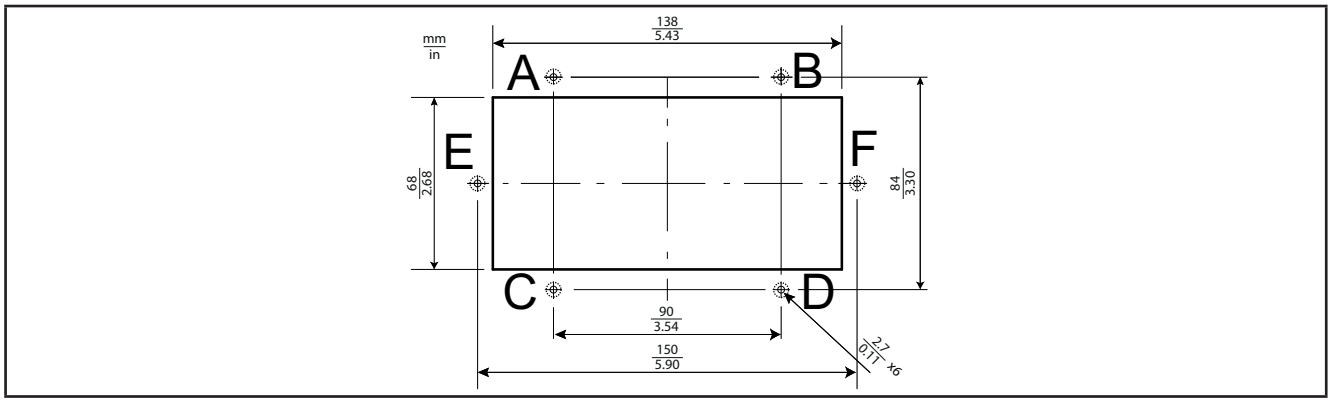

Fig. 58. Dimensions of panel opening for EVK PRO DISPLAY

CHAPTER 5
User interface

5.1. EWCM 9000 PRO (HF) user interface

The interface, comprising the front cover of the controller, allows you to perform all operations needed to use the device. The data supplied for the keys refer to versions **EWCM 9000 PRO 42D (/SSR)**.
EWCM 9000 PRO 42B CO2 compressor rack controllers have no display. To work with these controllers, use the **EVK PRO DISPLAY graphic display**.

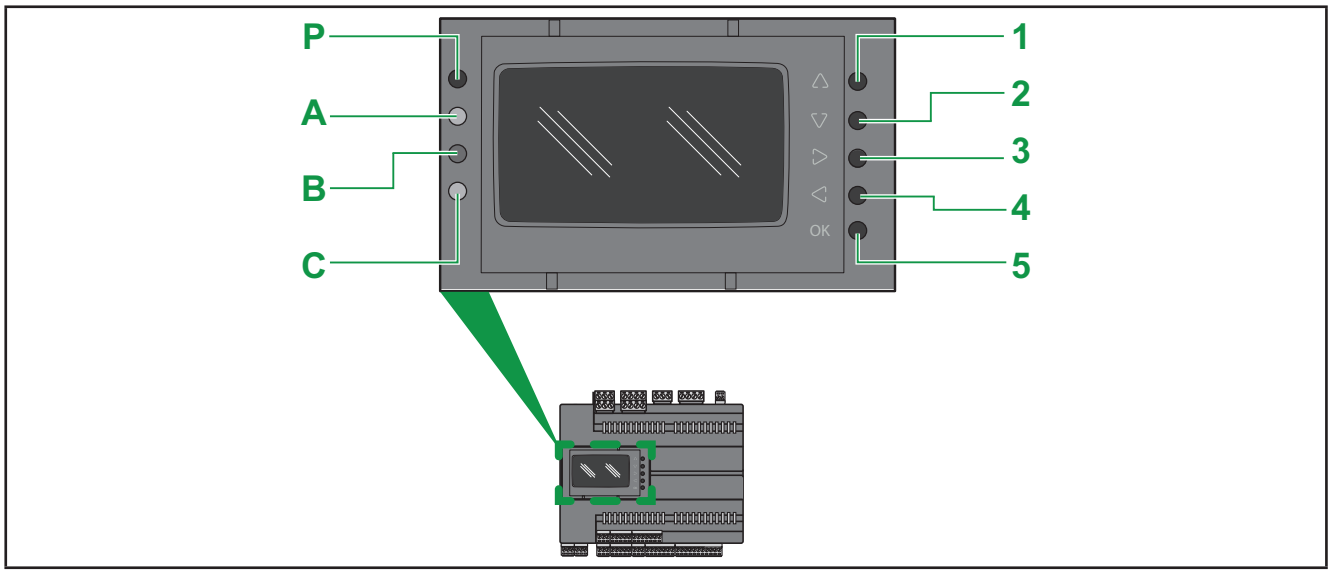

Fig. 59. EWCM 9000 PRO 42D (/SSR)

The keys for the version EWCM 9000 HF can be programmed from the controller application. The following table describes the default settings of the keys (the keys can be configured via the CO2 compressor rack controller booster).

5.2. EVK PRO DISPLAY user interface

The interface, comprising the front cover of the controller, allows you to perform all operations needed to use the device.

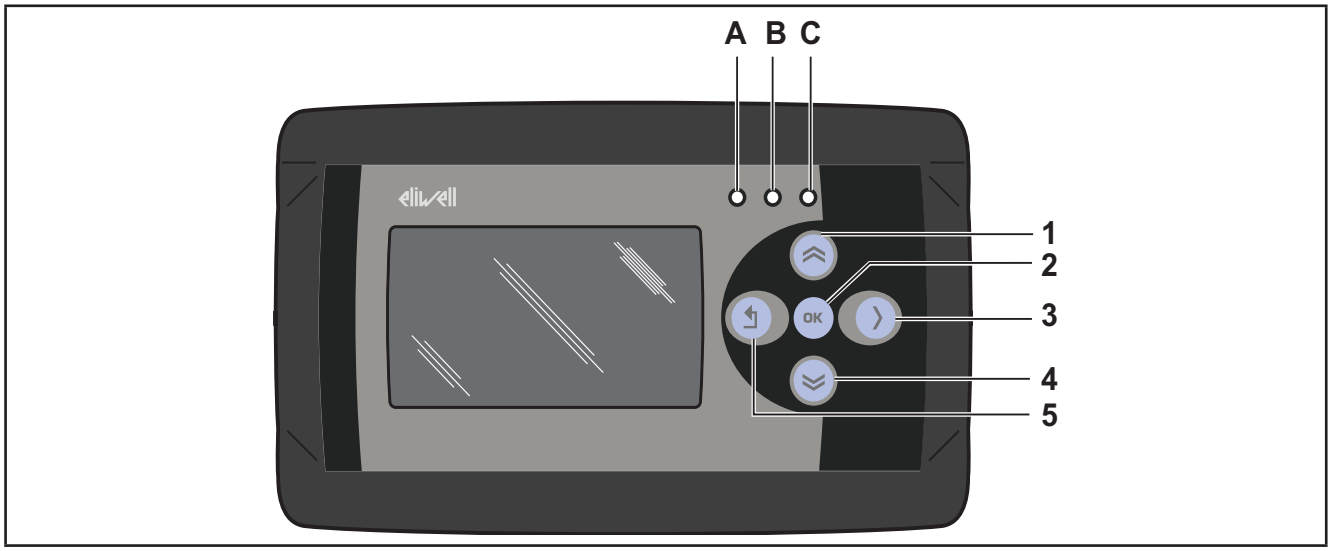

Fig. 60. EVK PRO DISPLAY

5.3. Keys and LEDs

No.	Key	EWCM 9000 main menu	other menus
1	⩔ **UP**	HT line *(1)*	• Scroll up • Increase/modify a value • Go to next label
2	**OK**	(press and hold) access to menus	• Access to sub-menu • Confirm a value
3	**RIGHT** 〉	HT line compressors	• Move cursor to right in Edit Mode
4	**DOWN** ⩖	LT line *(1)*	• Scroll down • Decrease/edit a value • Go to previous label
5	↰ **Exit**	- *(1) exit compressors menu and return to main menu*	• Exit menu page/go back to previous menu • Move cursor to left in Edit Mode • (press and hold) Exit Edit Mode

No.	Key combination	press and hold for about 3 seconds
4+5	**DOWN**	Enter the EVK PRO DISPLAY menu
	↰ **Exit**	

NOTE. If ??? appears on the display, the EVK PRO DISPLAY terminal does not communicate correctly with the controller. Verify the CAN serial wiring between the controller and the EVK PRO DISPLAY terminal.
If there is no communication it is not possible to work with the controller and view/edit operations from the terminal.

The following table describes the colour and function for each LED in the **EWCM 9000 PRO (HF) / EVK PRO DISPLAY**.

LED	Colour	EWCM 9000 PRO function
P	Green LED	On: **EWCM 9000 PRO (HF)** powered
A	Red LED	On: Alarm active Blinking: alarm acknowledged
B	Yellow LED	**EWCM 9000 PRO (HF)** On: datalogger is saving data (only on local interface)
		EVK PRO DISPLAY -
C	Green LED	On: **EWCM 9000 PRO (HF)** running Blinking: Energy Saving or floating suction

NOTE. LEDs A-B-C are programmable in the version **EWCM 9000 PRO-HF.**
By default, LEDs A, B, C are used for USB management.

5.3.2.1. DIAGNOSTICS menu

The main view is defined in the HMI menu.
EVK PRO DISPLAY is factory configured with a default DIAGNOSTICS menu that appears when the device is powered on.
In which case, to open the DIAGNOSTICS menu proceed as follows:

No.	Key combination	press and hold for about 3 seconds
4+5	**DOWN**	Open DIAGNOSTICS menu
	↰ **Exit**	

To return to the controller application menu open the 'HMI Management' page, select ↰ and press **OK**.

LEDs A, B and C are programmable via the controller application **EWCM 9000 PRO-HF**

5.4. Upload remote pages and BIOS parameters

The EVK PRO DISPLAY replicates the information in the EWCM 9000 PRO base.
To update the menu pages from the EWCM 9000 PRO controller to the EVK PRO DISPLAY terminal and update the BIOS parameters of the expansion proceed as follows:

1. Press Up and ESC at the same time
2. The selection page **BIOS parameters | HMI Management** will appear
3. Select the required item using the UP and DOWN keys
4. **BIOS parameters** has 3 sub-menus: Display, Buzzer and CAN for switching the buzzer mode on and off and setting the CAN address, respectively
5. **HMI Management** is used to upload remote pages and update the BIOS: the operation must be confirmed, and once started it cannot be cancelled.

To launch the remote pages and return to the main menu of the controller, access the **HMI Management** page, go to ↰ and press **OK**.

5.5. Fundamental state display

The interface, comprising the front cover of the controller, allows you to perform all operations needed to use the controller.

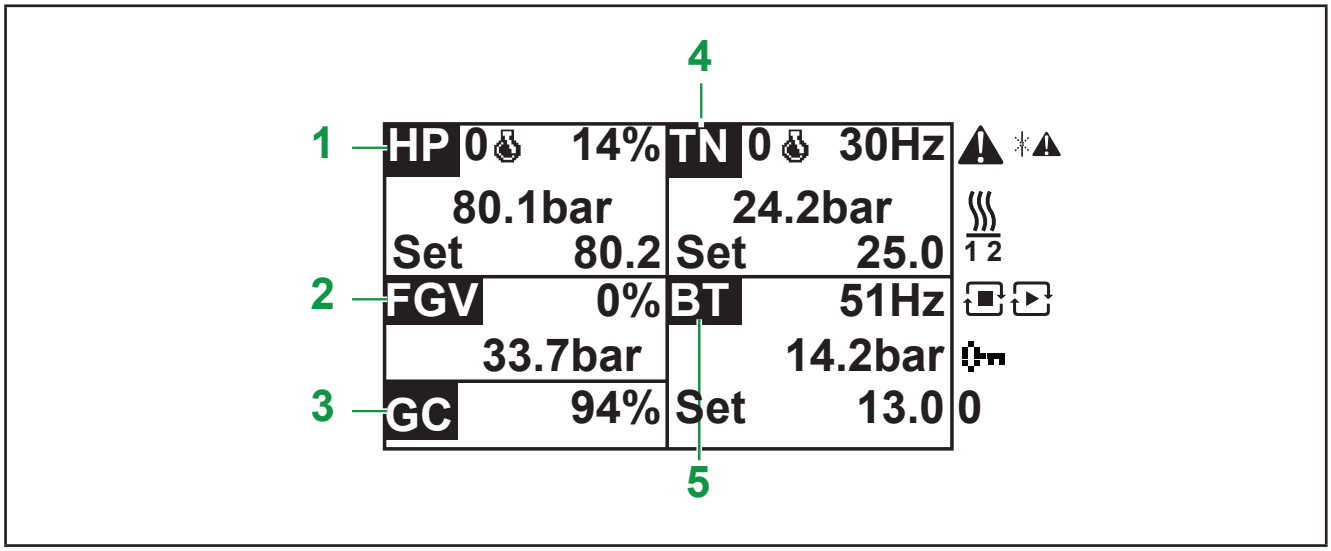

Fig. 61. Main menu

5.5.2.1. Display segments

No.	IT	EN	Description (English)	Descrizione (Italiano)
1	HP	HP	High Pressure	Alta Pressione (HP)
2	FGV	FGV	Flash Gas Valve	Valvola Flash Gas
3	GC	GC	Gas Cooler	Gas Cooler
4	TN	HT	High Temperature	Temperatura Normale (linea TN)
5	LT	LT	Low Temperature	Bassa Temperatura (linea BT)

5.6. Access to menus

The buttons have different functions depending on the menu displayed:

No.		HT line	LT line	compression parallel	HP	HR1	HR2
1	⌃⌃	HT line compressors	HT line compressors	HT line compressors	HT line compressors	HT line compressors	HT line compressors
2	**OK**	-	-	-	-	-	-
3	⟩	LT line	parallel compression	HT line	HR1	HR2	-
4	⌄⌄	LT line compressors	LT line compressors	LT line compressors	LT line compressors	LT line compressors	LT line compressors
5	↰	return to main menu	HT line compressors section	LT line	parallel compression	HP	HR1

5.6.2.1. LT / HT line compressors

The menu shows the state of the compressors:
- INVERTER compressor activation frequency Hz
- digital compressor activation percentage 0% or 100%
- compressor hours of operation
- Compressor On/Off delays
- Alarms present

5.6.2.2. LT/HT line

The menu shows
- recorded pressure
- Set (setpoint)
- SH (superheat)
- list of compressors on/off

5.7. Navigation Menu

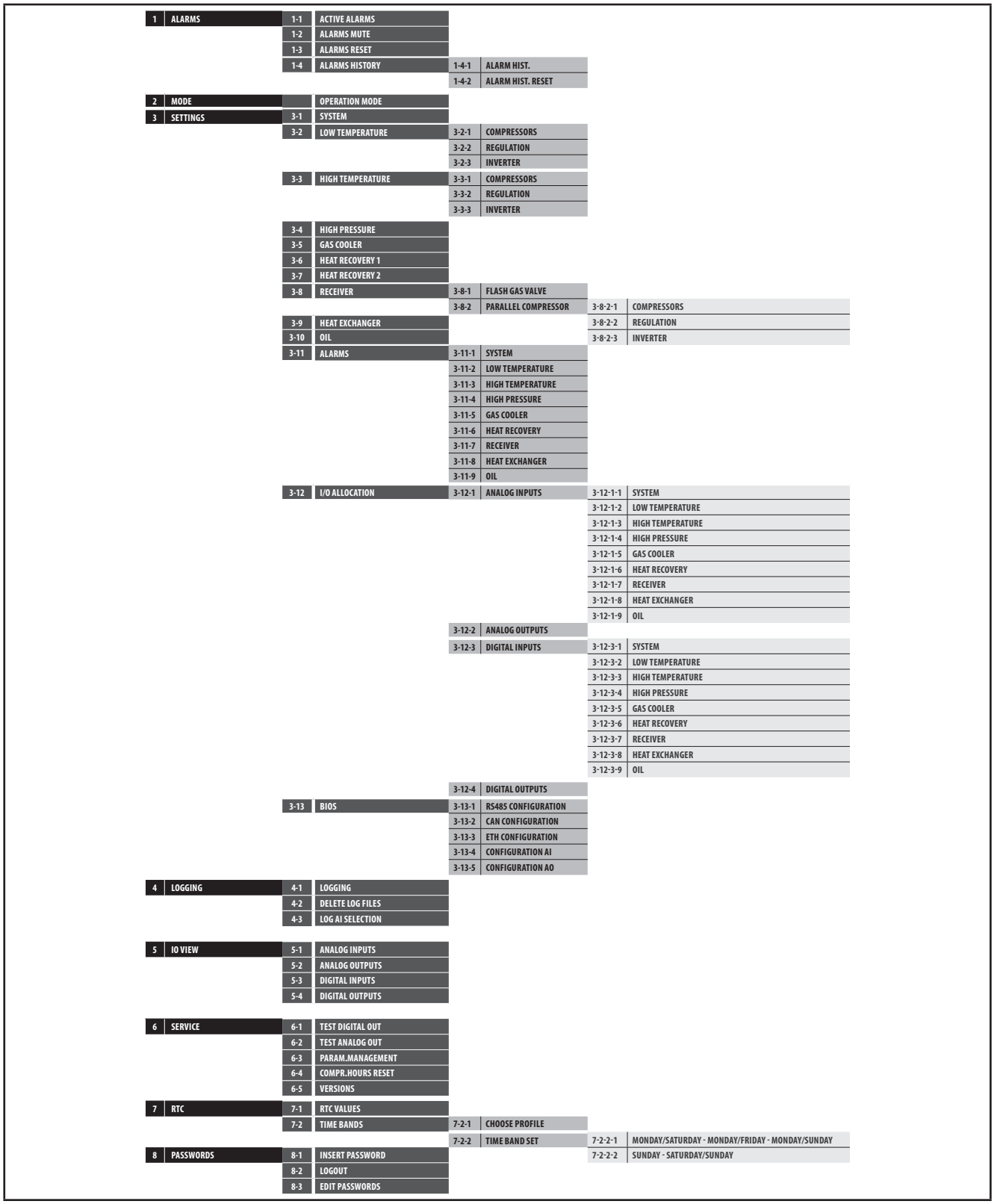

Fig. 62. Menu tree

CHAPTER 6
Physical I/O configuration and serial ports

Every so often new input and output modules and other devices, not documented in the following information, are made available. For information on new devices, contact your local Eliwell dealer.

NOTICE

INOPERABLE DEVICE

Whenever an I/O expansion module or other device placed on the market recently for this equipment is installed, updated the controller firmware to the latest version.

Failure to follow these instructions can result in equipment damage.

NOTE: For more information on how to update the controller firmware, contact your local Eliwell dealer.

The I/O and ports of the **EWCM 9000 PRO** can be configured with parameters; for each input, output and serial port. refer to the following table.

	For more information refer to
Analogue inputs	**“6.1. Configuration of analogue inputs” page 88**
Analogue outputs	**“6.1.3. Configuration of (LOW VOLTAGE - SELV) analogue outputs” page 91**
Digital inputs (no voltage)	**8.1. Tabella parametri EWCM 9000 PRO a pagina**
Digital inputs (low voltage - SELV)	**8.1. Tabella parametri EWCM 9000 PRO a pagina**
Digital outputs (low voltage - SELV)	**8.1. Tabella parametri EWCM 9000 PRO a pagina**
Serial ports	**8.1. Tabella parametri EWCM 9000 PRO a pagina**

The application of incorrect current and voltage values to the analogue inputs and outputs may damage the electronic circuits. Moreover, connecting a current output device to an analogue input configured for voltage and vice versa will also damage the electronic circuits.

NOTICE

INOPERABLE DEVICE

- Do not apply voltages over 11 V to the controller analogue inputs or the input/output expansion module when the analogue input is configured as a 0...5 V or 0...10 V input.
- Do not apply currents over 30 mA to the controller analogue inputs or the input/output expansion module when the analogue input is configured as an input 0...20 mA or 4...20 mA .
- Make sure that the signal applied corresponds to the analogue input configuration.

Failure to follow these instructions can result in equipment damage.

6.1. Configuration of analogue inputs

EWCM 9000 PRO 42 I/O has 12 analogue inputs, called AI1…AI12.

Via these parameters it is possible to configure an input to acquire a signal from a physical resource (probe, digital input, voltage/current signal) as specified in the following tables. **Not all configurations are allowed**.

NOTICE

INOPERABLE DEVICE

Configure the analogue inputs in pairs.

Failure to follow these instructions can result in equipment damage.

The inputs are configurable in pairs:
- with 8 analogue inputs there are 4 pairs of NTC, PTC, Pt1000 probes, etc.
- with 12 analogue inputs there are 6 pairs of NTC, PTC, Pt1000 probes, etc.

For more information refer to **"6.1.2. Permitted configurations for analogue inputs" page 90**.
The inputs can be configured as temperature probes (NTC, PTC or Pt1000), digital inputs or current/voltage inputs (0/4...20 mA , 0...10 V, 0...5 V, 0...5 V ratiometric).

Type of analogue input Aix	Value					
Folder / Parameter	**0**	**1**	**2**	**3**	**4**	**5**
folder **3-13-4 AI Configuration**	NTC probe (NK103)	DI (1)	NTC Probe (103AT)	4...20 mA (2)	0...10 V (2)	0...5 V Ratiometric
parameters	**6**	**7**	**8**	**9**	**10**	**11**
13.037 - P01 **13.038 - P02** **13.039 - P03** **13.040 - P04** **13.041 - P05** **13.042 - P06** **13.043 - P07** **13.044 - P08** **13.045 - P09** **13.046 - P10** **13.047 - P11** **13.048 - P12**	Pt1000	hΩ (NTC) (3)	daΩ (Pt1000) (4)	PTC (KTY81)	0...5 V	0...20 mA

(1) Input configured as no voltage digital input

(2) 4...20 mA / 0...10 V / 0...5 V / 0...5 V ratiometric:

Minimal integral scale AIx
- for current probes, value = 0/4 mA,
- for voltage probes 0...10 V, value = 0 V,
- for ratiometric probes (0...5 V), value = 10% (corresponding to 0.5 V)

Maximum integral scale AIx
- for current probes, value = 20 mA,
- for voltage probes 0...10 V, value = 10 V,
- for ratiometric probes (0...5 V), value = 90% (corresponding to 4.5 V)

(3) Cfg_AIx = 7 Resistance value read, expressed in hΩ for a resistance applied to the input using the controller in NTC configuration, i.e. **creating a divider with a pull-up resistance of 10 kΩ**.

(4) Cfg_AIx = 8 Resistance value read, expressed in daΩ for a resistance applied to the input using the controller in Pt1000 configuration, i.e. **creating a divider with a pull-up resistance of 2 kΩ**.

NOTE: Typically used with potentiometer at input.
The resistance range for the hΩ (NTC) configuration is up to 150 kΩ, and up to 30 kΩ for the daΩ (Pt1000) configuration.

6.1.1. Analogue input configuration for EXP 4D PRO

There are 4 analogue inputs, referred to below as AI1…AI4.
Using the parameters, a physical resource (probe, digital input, voltage/current signal) can be “physically” configured for each type of input
The inputs can be configures in pairs AI1, AI2 and AI3, AI4
Inputs can be “physically” configured as specified in the table below.

		Value										
Par.	**Description**	**0**	**1**	**2**	**3**	**4**	**5**	**6**	**7**	**8**	**9**	**10**
Cfg_AIx **x=1...4**	Type of AIx analogue input	NTC probe (NK103)	DI (1)	NTC Probe (103AT)	4...20 mA (2)	0...10 V (2)	0...5 V Ratiometric (2)	Pt1000	hΩ (NTC) (3)	daΩ (Pt1000) (4)	PTC (KTY81)	0...5 V

(1) DI input configured as a no voltage digital input

(2) **4...20 mA / 0...10 V / 0...5 V ratiometric**

Minimal integral scale AIx
- for current probes, value = 4 mA,
- for voltage probes 0...10 V, value = 0 V,
- for ratiometric probes (0...5 V), value = 10% (corresponding to 0.5 V)

Maximum integral scale AIx
- for current probes, value = 20 mA,
- for voltage probes 0...10 V, value = 10 V,
  for ratiometric probes (0...5 V), value = 90% (corresponding to 4.5 V)

(3) Cfg_AIx = 7 Resistance value read, expressed in hΩ for a resistance applied to the input using the controller in NTC configuration, i.e. **creating a divider with a pull-up resistance of 10 kΩ**.

(4) Cfg_AIx = 8 Resistance value read, expressed in daΩ for a resistance applied to the input using the controller in Pt1000 configuration, i.e. **creating a divider with a pull-up resistance of 2 kΩ**.
Note: Typically used with potentiometer at input.
The resistance range for the hΩ (NTC) configuration is up to 150 kΩ, and up to 30 kΩ for the daΩ (Pt1000) configuration.

6.1.2. Permitted configurations for analogue inputs

The **EWCM 9000 PRO** compressor rack controllers have analogue inputs which can be configured to Acquire the signals of the following probes: NTC, digital input, 0/4...20 mA 0...5 V, 0...10 V, Pt1000, PTC.
EWCM 9000 PRO 42 I/O have analogue inputs: AI1 ... AI12.
These analogue inputs (AI1...AI12) are configurable in pairs: (AI1, AI2) is the first pair, (AI3, AI4) the second pair, and so on to the last pair (AI11, AI12).
For each pair of analogue inputs, not all signals can be acquired at the same time; the following table shows the permitted configurations, marked by ✓.

The application of a configuration that is not allowed triggers a 0x8003 error (decimal: 32771) on the field value of both probes.

		A (for example: 13.037 - P01)										
		0	**1**	**2**	**3 and 11**	**4**	**5**	**6**	**7**	**8**	**9**	**10**
B (for example: 13.038 - P02)	**0**	✓	✓	✓	-	-	-	-	✓	-	-	-
	1	✓	✓	✓	-	-	-	-	✓	-	-	-
	2	✓	✓	✓	-	-	-	-	✓	-	-	-
	3 and 11	-	-	-	✓	-	-	-	-	-	-	-
	4	-	-	-	-	✓	-	-	-	-	-	-
	5	-	-	-	-	-	✓	-	-	-	-	✓
	6	-	-	-	-	-	-	✓	-	✓	✓	-
	7	✓	✓	✓	-	-	-	-	✓	-	-	-
	8	-	-	-	-	-	-	✓	-	✓	✓	-
	9	-	-	-	-	-	-	✓	-	✓	✓	-
	10	-	-	-	-	-	✓	-	-	-	-	✓

For other pairs of configurable analogue inputs, replace as described in the previous table:

	Label in previous table			
Permitted parameter pairs in previous table	**A**		**B**	
Pair No. 1	13.037 - P01	Config. AI1 EWCM	13.038 - P02	Config. AI2 EWCM
Pair No. 2	13.039 - P03	Config. AI3 EWCM	13.040 - P04	Config. AI4 EWCM
Pair No. 3	13.041 - P05	Config. AI5 EWCM	13.042 - P06	Config. AI6 EWCM
Pair No. 4	13.043 - P07	Config. AI7 EWCM	13.044 - P08	Config. AI8 EWCM
Pair No. 5	13.045 - P09	Config. AI9 EWCM	13.046 - P10	Config. AI10 EWCM
Pair No. 6	13.047 - P11	Config. AI11 EWCM	13.048 - P12	Config. AI12 EWCM

6.1.3. Configuration of (LOW VOLTAGE - SELV) analogue outputs

See **CHAPTER 3 "Electrical connections" page 33** for the number and type of analogue outputs used and for information on the symbols used on labels supplied with the controller.
There are 6 analogue and no-voltage (SELV) outputs for the **EWCM 9000 PRO 42 I/O** with the following characteristics.

Configuration of no-voltage (SELV) analogue outputs for EWCM 9000 PRO 42D (/SSR)

Analogue outputs	Description
AO1	Low voltage (SELV) outputs
AO2	Low voltage (SELV) outputs
AO3	Parameter **13.073 - n01**: • **0 =** current modulation 4...20 mA • **1 =** ON-OFF current: the (ON) current is 23 mA, (OFF) current is 0 mA • **2 =** voltage modulation 0...10 V • **3 =** PWM mode (settable polarity): Frequency from 1 Hz to 2000 Hz (precision 1 Hz), Duty Cycle from 0.0% to 100.0% (precision 0.1%). Open Collector output, 30 mA, ⎓ 24 V max.
AO4	Parameter **13.074 - n02**: • **0 =** current modulation 4...20 mA • **1 =** ON-OFF current: the (ON) current is 23 mA, (OFF) current is 0 mA • **2 =** voltage modulation 0...10 V • **3 =** PWM mode (settable polarity): Frequency from 1 Hz to 2000 Hz (resolution 1 Hz), Duty Cycle from 0.0% to 100.0% (resolution 0.1%). Open Collector output, 30 mA, ⎓ 24 V max.
AO5	Low voltage (SELV) outputs
AO6	Low voltage (SELV) outputs

For more information refer to **"CHAPTER 8" "Parameters" page 149**

CHAPTER 7
Functions

7.1. Transcritical installation

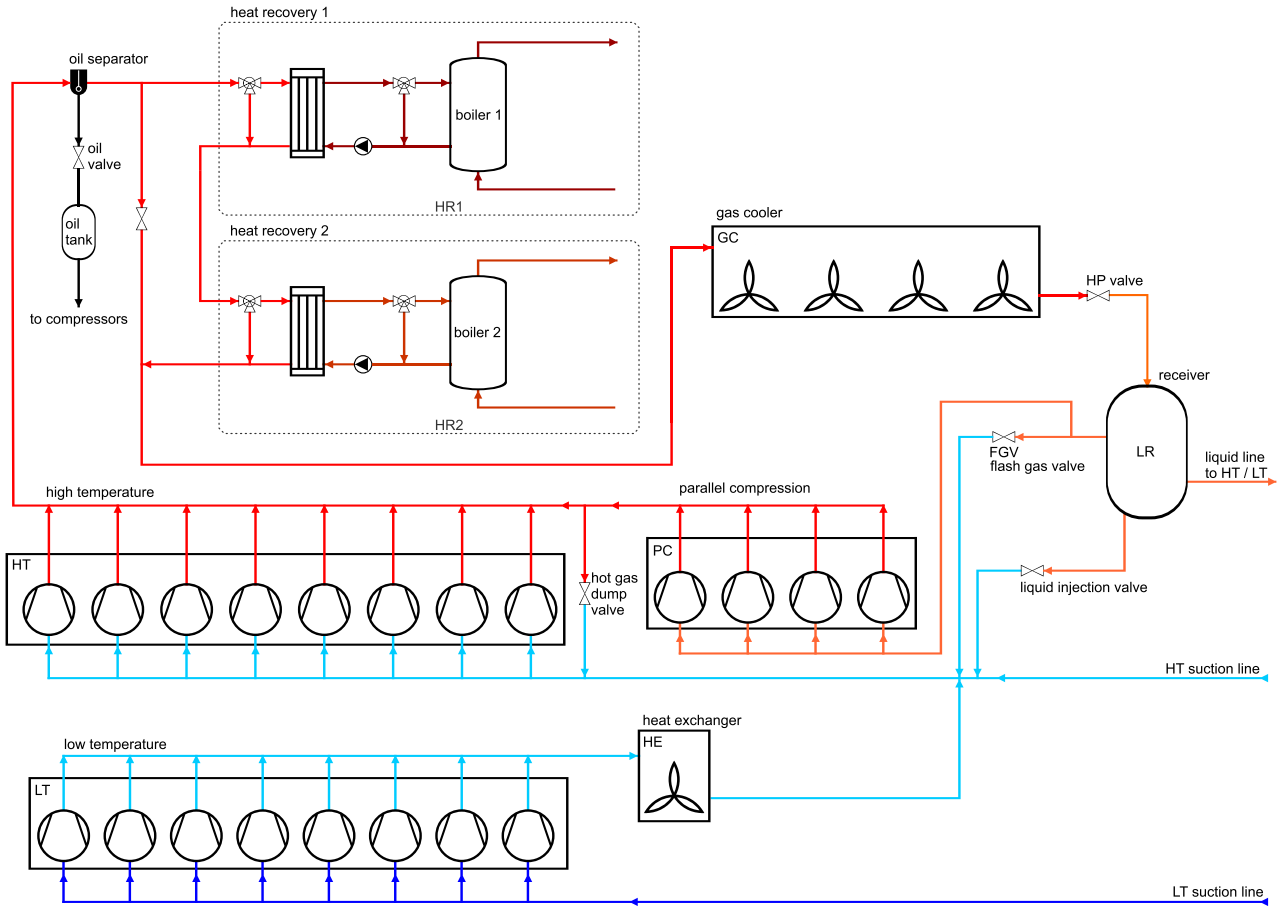

Fig. 63. CO2 Boost System

7.2. Low Temperature (LT line)

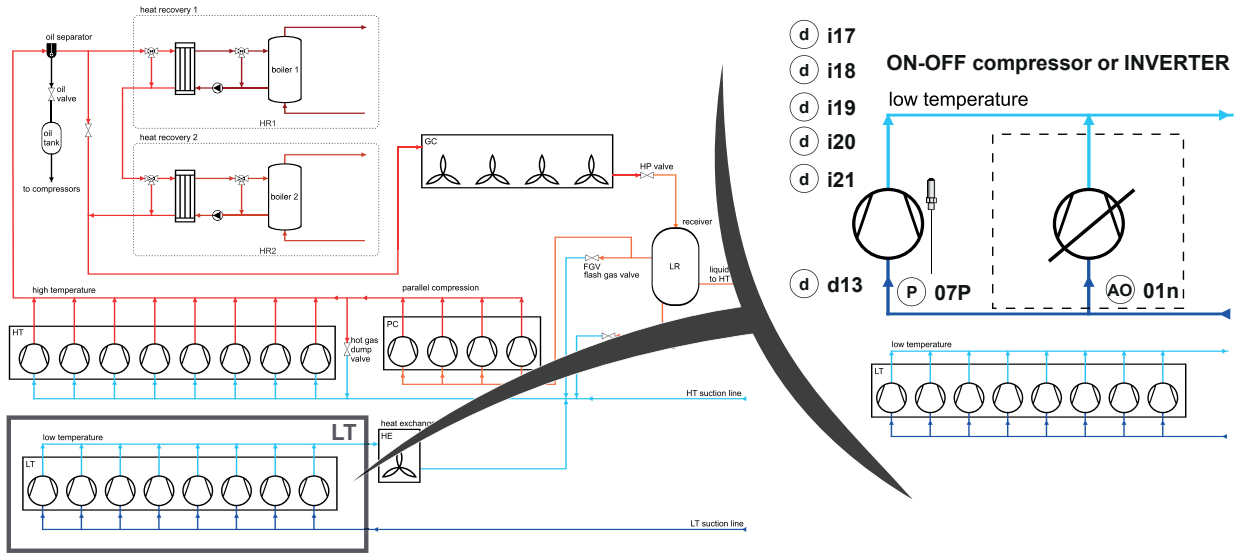

Fig. 64. CO2 Boost System - LT line compressors

7.2.1. LT line I/O allocation

See **CHAPTER 3 "Electrical connections" page 33** for the number and type of analogue outputs used and for information on the symbols used on labels supplied with the controller.

7.2.1.1. LT line allocation of digital and analogue outputs

Resource Allocation	Label	Parameter	Description	Notes
digital	**12.214 - d13**	LT compr. 1 enable	LT line compressor enabling	02.001 - LCn > 0
	12.215 - d14	LT compr. 2 enable		02.001 - LCn > 1
	12.216 - d15	LT compr. 3 enable		02.001 - LCn > 2
	12.217 - d16	LT compr. 4 enable		02.001 - LCn > 3
	12.218 - d17	LT compr. 5 enable		02.001 - LCn > 4
	12.219 - d18	LT compr. 6 enable		02.001 - LCn > 5
	12.220 - d19	LT compr. 7 enable		02.001 - LCn > 6
	12.221 - d20	LT compr. 8 enable		02.001 - LCn > 7
analog	**12.251 - 01n**	LT inverter 1 *(1)*	inverter output regulation	02.001 - LCn > 0

(1) **NOTE.** Configure and connect both the analogue and digital consent outputs to the inverter.

7.2.1.2. LT line compressor probe allocation

Label	Probe parameter	Label	Backup probe parameter	Description
12.007 - 07P	LT suction press.	**12.010 - 08P**	LT suct. press. bck	suction probe and backup *(1)*
12.008 - 07L	LT min suct. press.	**12.011 - 08L**	LT min suct. P bck	suction probe minimum threshold
12.009 - 07H	LT max suct. press.	**12.012 - 08H**	LT max suct. P bck	suction probe maximum threshold
12.013 - 09P	LT suction temp.			suction probe in temperature
12.014 - 10P	LT discharge temp.			discharge probe

(1) If both probes are in error the percentage output is defined by 02.009 - LPr

For more information refer to **""CHAPTER 8" "Parameters" page 149**

7.2.1.3. LT line compressor digital input allocation

	Label	Parameter	Description	Notes
Alloc digital	**12.074 - i15**	LT Lo press. switch	LT line low pressure digital input	02.001 - LCn > 0
	12.075 - i16	LT inverter motor protection	LT line inverter motor protection digital input	
Alloc digital 1	**12.076 - i17**	LT compr. 1 thermal	LT line compressor 1 thermal digital input	02.001 - LCn > 0 Compressor 1
	12.077 - i18	LT compr. 1 Hi press.	LT line compressor 1 high pressure digital input	
	12.078 - i19	LT compr. 1 oil Hi	LT line compressor 1 oil level high digital input	
	12.079 - i20	LT compr. 1 oil Lo	LT line compressor 1 oil level low digital input	
	12.080 - i21	LT compr. 1 gen.alarm	LT line compressor 1 general alarm digital input	
Alloc digital 2	**12.81 - i22**	LT compr. 2 thermal	LT line compressor 2 thermal digital input	02.001 - LCn > 1 Compressor 2
	12.082 - i23	LT compr. 2 Hi press.	LT line compressor 2 high pressure digital input	
	12.083 - i24	LT compr. 2 oil Hi	LT line compressor 2 oil level high digital input	
	12.084- i25	LT compr. 2 oil Lo	LT line compressor 2 oil level low digital input	
	12.085 - i26	LT compr. 2 gen.alarm	LT line compressor 2 general alarm digital input	
Alloc digital 3	**12.086 - i27**	LT compr.3 thermal	LT line compressor 3 thermal digital input	02.001 - LCn > 2 Compressor 3
	12.087 - i28	LT compr.3 Hi press.	LT line compressor 3 high pressure digital input	
	12.088 - i29	LT compr. 3 oil Hi	LT line compressor 3 oil level high digital input	
	12.089 - i30	LT compr. 3 oil Lo	LT line compressor 3 oil level low digital input	
	12.090 - i31	LT compr.3 gen.alarm	LT line compressor 3 general alarm digital input	
Alloc digital 4	**12.091 - i32**	LT compr. 4 thermal	LT line compressor 4 thermal digital input	02.001 - LCn > 3 Compressor 4
	12.092 - i33	LT compr.4 Hi press.	LT line compressor 4 high pressure digital input	
	12.093 - i34	LT compr. 4 oil Hi	LT line compressor 4 oil level high digital input	
	12.094 - i35	LT compr. 4 oil Lo	LT line compressor 4 oil level low digital input	
	12.095 - i36	LT compr.4 gen.alarm	LT line compressor 4 general alarm digital input	
Alloc digital 5	**12.096 - i37**	LT compr.5 thermal	LT line compressor 5 thermal digital input	02.001 - LCn > 4 Compressor 5
	12.097 - i38	LT compr.5 Hi press.	LT line compressor 5 high pressure digital input	
	12.098 - i39	LT compr. 5 oil Hi	LT line compressor 5 oil level high digital input	
	12.089 - i40	LT compr. 5 oil Lo	LT line compressor 5 oil level low digital input	
	12.100 - i41	LT compr.5 gen.alarm	LT line compressor 5 general alarm digital input	
Alloc digital 6	**12.101 - i42**	LT compr. 6 thermal	LT line compressor 6 thermal digital input	02.001 - LCn > 5 Compressor 6
	12.102 - i43	LT compr.6 Hi press.	LT line compressor 6 high pressure digital input	
	12.103 - i44	LT compr. 6 oil Hi	LT line compressor 6 oil level high digital input	
	12.104 - i45	LT compr. 6 oil Lo	LT line compressor 6 oil level low digital input	
	12.105 - i46	LT compr. 6 gen.alarm	LT line compressor 6 general alarm digital input	
Alloc digital 7	**12.106 - i47**	LT compr.7 thermal	LT line compressor 7 thermal digital input	02.001 - LCn > 6 Compressor 7
	12.107 - i48	LT compr. 7 Hi press.	LT line compressor 7 high pressure digital input	
	12.108 - i49	LT compr. 7 oil Hi	LT line compressor 7 oil level high digital input	
	12.109 - i50	LT compr. 7 oil Lo	LT line compressor 7 oil level low digital input	
	12.110 - i51	LT compr. 7 gen.alarm	LT line compressor 7 general alarm digital input	
Alloc digital 8	**12.111 - i52**	LT compr. 8 thermal	LT line compressor 8 thermal digital input	02.001 - LCn > 7 Compressor 8
	12.112 - i53	LT compr. 8 Hi press.	LT line compressor 8 high pressure digital input	
	12.113 - i54	LT compr. 8 oil Hi	LT line compressor 8 oil level high digital input	
	12.114 - i55	LT compr. 8 oil Lo	LT line compressor 8 oil level low digital input	
	12.115 - i56	LT compr. 8 gen.alarm	LT line compressor 8 general alarm digital input	

7.2.2. LT line regulation

The regulation allows up to 8 compressors, of which maximum one at variable speed (8 complete digital compressors or

maximum 7 ON/OFF compressors + 1 INVERTER compressor at variable speed).
The suction pressure is regulated (12.007 - 07P) according to the setpoint 02.011 - LSt.
The lower setpoint limit is 02.012 - LLS and the upper limit is 02.013 - LHS.
The regulation is based on a PID with proportional band; it is modulated only with the INVERTER outside of the Dead Band.
Below and above the threshold 02.014 - LbP an ON-OFF step is switched on and off.
The regulation is forced to zero below the set 02.031 - Lit.

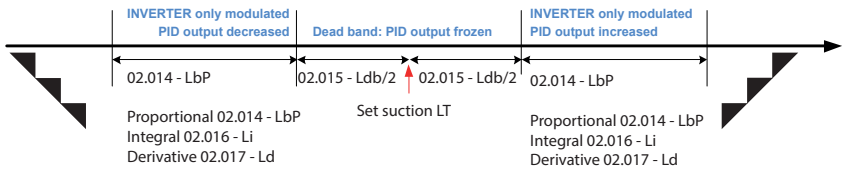

Fig. 65. LT compressors PID Dead Band regulation

7.2.2.1. Inverter Output

Compressors controlled by inverter, can only operate above a pre-set speed (which depends on compressor type).
Frequency plate data is found in the technical sheet attached to the INVERTER, or on the compressor plate. The rated power of the INVERTER is defined by 02.027 - LiP.
The INVERTER number (no INVERTER or INVERTER) is defined by 02.022-inL = 0 or 1.

The INVERTER can be piloted via the selected analogue output **12.251 - 01n**.
This output varied from 0...10 V, however the actuation window can be limited using parameters 02.025 - LiL and 02.026 - LiH. Minimum speed such that the compressor has the torque needed to be able to switch-on is defined by 02,032 - LSP.
This speed is expressed as a percentage, 1% corresponds to the minimum inverter speed, 100% the maximum.
The operating frequency window of the INVERTER is defined by parameters 02.023 - LLF minimum frequency and 02.024 - LHF maximum frequency.

When the INVERTER output is at 0% and the regulation requires power, the INVERTER output is forced to 02.032 - LSP for a period of time 02.033 - LiS.
The step on-off mode is defined by the parameter 02.028 - Lir, LT line inverter mode.
- if 02.028 - Lir = 0 the on/off is immediate,
- if 02.028 - Lir = 1 the on/off occurs after a period of time set by 02.034 - LiE at 100% power.

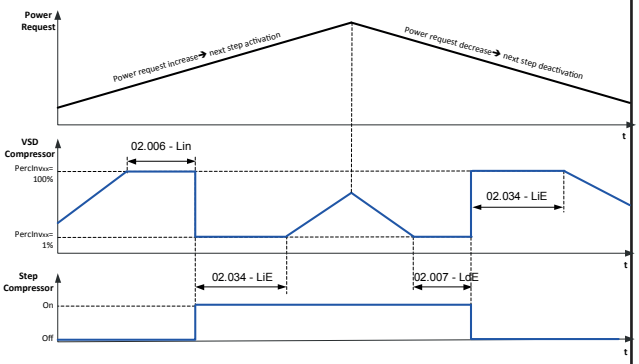

Fig. 66. enable/disable 02.028 = 0

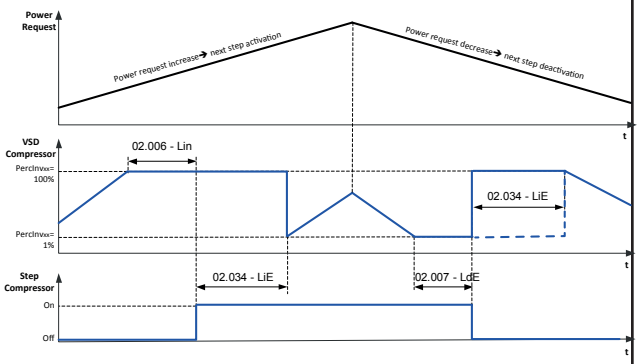

Fig. 67. enable/disable 02.028 = 1

The INVERTER modulates more or less quickly depending on the pressure. If it is very close to the suction set the increase/decrease in percentage is defined by 02.029 - LSS, typically 1% per second.
Far from the set the increase/decrease is “faster”, defined similarly by 02.030 - LSF

The digital ON/OFF compressors are managed as follows:
Step activation: if the INVERTER activation percentage is at 100% for 02.006 - Lin and an ON/OFF compressor is available on start-up. When the step is activated the percentage is forced at 1% or 100% depending on 02.028
Step deactivation: if the INVERTER activation percentage is at 1% for 02.007 - LDE and an ON/OFF compressor is available for stop.
The power step on-off function must comply with the activation and release times between resources 02.003 - Lon, 02.004- LnF, 02.005 - LoF and also depends on parameter 01.005 - rot.

Enter and deactivate steps

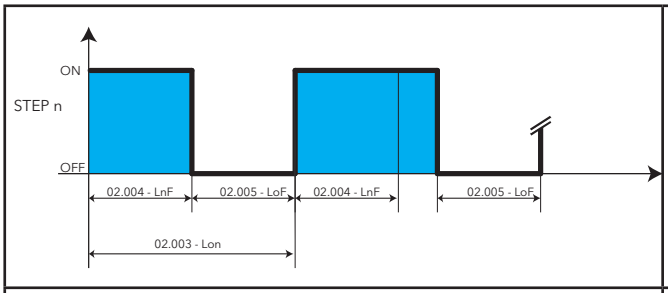

Fig. 68. LT compressor protection

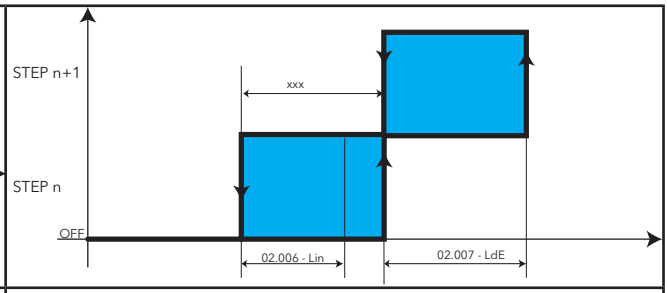

Fig. 69. LT compressor protection

7.2.2.2. LT line Economy function

ù

7.2.2.3. LT line power limitation

It is possible to limit the power globally actuated by the compressor stage. The limit is set by parameter 02.010 - LPH and must be understood as the percentage of maximum power supplied by the stage calculated using the compressor rating data (parameters 02.002 - LrP and 02.027 - LiP). If the power required by the control exceeds the limit, the power expressed by the limit will be actuated.
The activation request may come from:
• time bands
• digital input appropriately configured **12.063 - i04**
• supervision

If 02.010 - LPH = 0 the limitation is deactivated.
When the limitation is active and 02.010 - LPH <> 0 the power percentage of the compressors stage is limited to 02.010 – LPH.

7.2.3. LT line parameters | 3-2 Low Temp

LABEL	LABEL	DESCRIPTION	RANGE	DEFAULT	M.U.	LEVEL
3-2-1 Compressors						
02.001 - LCn	**Num. of compressors**	LT line compressors number Total number of LT line compressors digital + inverter	0...8	2	num	**3**
02.002 - LrP	**Compr. rated power**	LT line compressor rated power	0...65535	100	num	**3**
02.003 - Lon	**Compr. on-on time**	LT line compressor on-on time Minimum time, between turning the same compressor on twice.	0...999	120	s	**2**
02.004 - LnF	**Compr. on-off time**	LT line compressor on-off time Minimum compressor operating time before being turned off. The 'called' compressor stays on at least for the time set by this parameter.	0...3600	15	s	**2**
02.005 - LoF	**Compr. off-on time**	LT line compressor off-on time Minimum time, between turning the same compressor off and back on again.	0...999	30	s	**2**
02.006 - Lin	**Compr.step inc delay**	LT line compressors interstep time On Delay time between the calls of two different steps.	0...3600	30	s	**2**
02.007 - LdE	**Compr.step dec delay**	LT line compressors interstep time Off Delay time between switching off two different steps.	0...3600	20	s	**2**
02.008 - LSd	**Shutdown time**	Shutdown time LT line	0...3600	20	s	**2**
02.009 - LPr	**Out error perc.**	LT line % power when suction probe is in error	0...100	0	%	**2**
02.010 - LPH	**Max out perc.**	LT line power limitation % 0 = disabled.	0...100	0	%	**2**
3-2-2 Regulation		01.002-SbP =1,2->bar | 01.002-SbP =3,4->psi				
02.011 - LSt	**Set**	LT line regulation set	0...8	2	num	**3**
			0...65535	100	num	**3**
02.012 - LLS	**Set min value**	LT line set min value	0...999	120	s	**2**
			0...3600	15	s	**2**
02.013 - LHS	**Set max value**	LT line set max value	0...999	30	s	**2**
			0...3600	30	s	**2**
02.014 - LbP	**Proportional band**	LT line proportional band	0...3600	20	s	**2**
			0...3600	20	s	**2**
02.015 - Ldb	**Dead band**	LT line dead band	0...100	0	%	**2**
			0...100	0	%	**2**
02.016 - Li	**Integral coeff.**	LT line integral factor	0...65535	20.0	num	**2**

LABEL	LABEL	DESCRIPTION	RANGE	DEFAULT	M.U.	LEVEL
02.017 - Ld	**Derivative coeff.**	LT line derivative factor	0...65535	0	num	**2**
02.018 - Lod	**Offset from DI**	LT line economy offset from digital input See digital input 12.064 - i05	-1.0...160.0	5.0	bar	**2**
			-200.0...800.0	9.4	°C/°F	
02.019 - LoS	**Offset from schedul.**	LT line economy offset from scheduler	-1.0...160.0	6.0	bar/psi	**2**
			-200.0...800.0	11.1	°C/°F	
02.020 - LLo	**Offset min value**	LT line economy offset min value from supervisor	-1.0...160.0	0	bar/psi	**2**
			-200.0...800.0	0	°C/°F	**2**
02.021 - LHo	**Offset max value**	LT line economy offset max value from supervisor	-1.0...160.0	0	bar/psi	**2**
			-200.0...800.0	0	°C/°F	**2**
3-2-3 Inverter		01.002-SbP =1,2->bar | 01.002-SbP =3,4->psi				
02.022 - inL	**Num. of inverters**	LT line inverters number	0...1	1	num	**3**
02.023 - LLF	**Inv. min freq.**	LT line inverter min frequency	0...200	30	(Hz)	**3**
02.024 - LHF	**Inv. max freq.**	LT line inverter max frequency	0...200	60	(Hz)	**3**
02.025 - LiL	**Voltage min**	LT line inverter min driving voltage	0...1000	0	V	**3**
02.026 - LiH	**Voltage max**	LT line inverter max driving voltage	0...1000	10	V	**3**
02.027 - LiP	**Inv. rated power**	LT line inverter rated power	0...65535	100	num	**3**
02.028 - Lir	**Inv. regulation mode**	LT line inverters mode 0=immediately, 1=after period set in 02.034 - LiE at 100% power.	0...1	0	num	**3**
02.029 - LSS	**Inv. % var. near set**	LT line % inverter variation near set	0...100	3	%	**3**
02.030 - LSF	**Inv. % var. far set**	LT line % inverter variation far from set	0...100	8	%	**3**
02.031 - Lit	**Inv. off threshold**	LT line compressors shutdown threshold	-1.0...160.0	11.0	bar/psi	**3**
			-200.0...800.0	-34.9	°C/°F	**3**
02.032 - LSP	**Inverter start %**	LT line inverter start %	0...100	1	%	**3**
02.033 - LiS	**Inverter start time**	LT line inverter start time	0...3600	30	s	**3**
02.034 - LiE	**Inverter reg. period**	LT line inverter timeout 1% (shutdown) or 100% (step activation)	0...3600	10	s	**3**

7.2.4. LT line compressor alarms

7.2.4.1. LT line probe errors

If both probes configured as LT suction probes (07P and backup probe 08P) are in error the regulation or % of power on the LT line is forced to the value defined by parameter 02.009 - LPr.
If the value 02.009 - LPr = 0 the LT line compressors will be blocked.

7.2.4.2. LT line alarm parameters

3-11-2 Low Temp						
11.036 - A34	**LT low suct. press.**	LT line alarm mode low suction pressure **See 11.001 - A01**	0...2	0	num	**2**
		LT line alarm priority low suction pressure **See 11.001 - A01**	0...3	0	num	**2**
11.037 - A35	**LT high suct. press**	LT line alarm mode high suction pressure	0...2	0	num	**2**
		LT line alarm priority high suction pressure	0...3	0	num	**2**
11.038 - A36	**LT high disch. press.**	LT line alarm mode high discharge pressure	0...2	0	num	**2**
		LT line alarm priority high discharge pressure	0...3	0	num	**2**
11.039 - A37	**LT high disch. temp.**	LT line alarm mode high discharge temperature	0...2	0	num	**2**
		LT line alarm priority high discharge temperature	0...3	0	num	**2**
11.040 - A38	**LT low superheat**	LT line alarm mode low superheat	0...2	0	num	**2**
		LT line alarm priority low superheat	0...3	0	num	**2**
11.041 - A39	**LT high superheat**	LT line alarm mode high superheat	0...2	0	num	**2**
		LT line alarm priority high superheat	0...3	0	num	**2**
11.042 - A40	**LT comp.therm. switch**	LT line alarm mode compressor thermal switch	0...2	0	num	**2**
		LT line alarm priority compressor thermal switch	0...3	0	num	**2**
11.043 - A41	**LT comp.therm. switch**	LT line max number of alarms in the window time compressor thermal switch	5...255	5	min	**2**
		LT line window time compressor thermal switch	0...32	0	num	**2**
11.044 - A42	**LT comp. high press.**	LT line alarm mode high press.compressor	0...2	0	num	**2**
		LT line alarm priority high press.compressor	0...3	0	num	**2**
11.045 - A43	**LT comp. high press.**	LT line max number of alarms in the window time high pressure compressor	5...255	5	min	**2**
		LT line window time high pressure compressor	0...32	0	num	**2**
11.046 - A44	**LT comp. oil**	LT line alarm mode oil compressor	0...2	0	num	**2**
		LT line alarm priority oil compressor	0...3	0	num	**2**
11.047 - A45	**LT comp. oil**	LT line max number of alarms in the window time compressor oil	5...255	5	min	**2**
		LT line window time compressor oil	0...32	0	num	**2**
11.048 - A46	**LT compr. gen. alarm**	LT line alarm mode general compressor	0...2	0	num	**2**
		LT line alarm priority general compressor	0...3	3	num	**2**
11.049 - A47	**LT compr. gen. alarm**	LT line max number of alarms in the window time general compressor	5...255	5	min	**2**
		LT line window time general compressor	0...32	0	num	**2**
11.050 - A48	**LT inverter motor protection**	LT line alarm mode inverter motor protection	0...2	0	num	**2**
		LT line alarm priority inverter motor protection	0...3	0	num	**2**

11.051 - A49	**LT inverter motor protection**	LT line max number of alarms in the window time inverter motor protection	5...255	5	min	**2**
		LT line window time inverter motor protection	0...32	0	num	**2**
11.052 - A50	**LT low press. switch**	LT line alarm mode low pressure switch	0...2	0	num	**2**
		LT line alarm priority low pressure switch	0...3	3	num	**2**
11.053 - A51	**LT low press. switch**	LT line max number of alarms in the window time low pressure switch	5...255	5	min	**2**
		LT line window time low pressure switch	0...32	0	num	**2**
11.054 - A52	**Low press. alm byp**	LT line low pressure switch alarm bypass	0...999	0	s	**2**
11.055 - A53	**High oil comp. byp**	LT line compressor oil high level alarm bypass	0...999	0	s	**2**
11.056 - A54	**Low oil comp. byp**	LT line compressor oil low level alarm bypass	0...999	0	s	**2**
11.057 - A55	**HP comp. alm byp**	LT line high pressure compressor alarm bypass	0...999	0	s	**2**
11.058 - A56	**LT low suct. press.**	LT line low suction pressure alarm threshold	-1.0...160.0	8.0	bar/psi	**2**
		LT line low suction pressure alarm threshold	-200.0...800.0	-4.27	°C/°F	**2**
11.059 - A57	**Low suct P diff.**	LT line low suction pressure alarm differential	1...160	3.4	bar/psi	**2**
		LT line low suction pressure alarm differential	1...800	8.8	°C/°F	**2**
11.060 - A58	**Low suct. press. byp**	LT line low suction pressure alarm bypass	0...999	0	s	**2**
11.061 - A59	**LT high suct. press**	LT line high suction pressure alarm threshold	-1.0...160.0	18.0	bar/psi	**2**
		LT line high suction pressure alarm threshold	-200.0...800.0	-21.0	°C/°F	**2**
11.062 - A60	**High suct P diff.**	LT line high suction pressure alarm differential	1.0...160.0	3.0	bar/psi	**2**
		LT line high suction pressure alarm differential	1.0...800.0	5.4	°C/°F	**2**
11.063 - A61	**High suct.press. byp**	LT line high suction pressure alarm bypass	0...999	0	s	**2**
11.064 - A62	**LT high disch. press.**	LT line high discharge pressure alarm threshold	-1.0...160.0	30.0	bar/psi	**2**
		LT line high discharge pressure alarm threshold	-200.0...800.0	-4.1	°C/°F	**2**
11.065 - A63	**High disch P diff.**	LT line high discharge pressure alarm differential	1.0...160.0	4.3	bar/psi	**2**
		LT line high discharge pressure alarm differential	1.0...800.0	5.4	°C/°F	**2**
11.066 - A64	**High disc.press. byp**	LT line high discharge pressure alarm bypass	0...999	0	s	**2**
11.067 - A65	**LT high disch. temp.**	LT line high discharge temperature alarm threshold	-200.0...800.0	70.0	°C/°F	**2**
11.068 - A66	**High disch T diff.**	LT line high discharge temperature alarm differential	0.1...800.0	1.0	°C/°F	**2**
11.069 - A67	**High disch.temp. byp**	LT line high discharge temperature alarm bypass	0...999	0	s	**2**
11.070 - A68	**Min super heating**	LT line min superheat	-200.0...800.0	6.0	°C/°F	**2**
11.071 - A69	**Low superheat byp**	LT line low superheat alarm bypass	0...999	90	s	**2**
11.072 - A70	**Max super heating**	LT line max superheat	0.1...800	0	°C/°F	**2**
11.073 - A71	**High superheat. byp**	LT line high superheat alarm bypass	0...999	0	s	**2**
11.074 - A72	**Super heating diff.**	LT line differential superheat	0.1...800	1.0	°C/°F	**2**

7.2.4.3. LT line alarms table

ID	description	alarm type	input (1)	bypass	effect
6	LT line suction pressure probe failure	probe	07P	-	backup probe
7	LT line backup suction pressure probe failure	probe	08P	-	AI % or compr. block LT
10	LT line suction temperature probe failure	probe	09P	-	warning - display only
12	LT line discharge temperature probe failure	probe	10P	-	warning - display only
93	LT line motor protection inverter alarm	digital	i016	-	resource blocked
100	LT line low pressure switch alarm	digital	i015	X	LT line compressors blocked
101	LT line high suction pressure alarm	input	07P - 08P	X	LT line compressors blocked
102	LT line low suction pressure alarm	input	07P - 08P	X	LT line compressors blocked
103	LT line high discharge pressure alarm	input	11P - 12P	X	LT line compressors blocked
104	LT line high discharge temperature alarm	input	10P	X	LT line compressors blocked
105	LT line low superheat alarm	input	09P - 08P	X	LT line compressors blocked
106	LT line high superheat alarm	input	09P - 08P	X	LT line compressors blocked
107	LT line compressor 1 thermal switch alarm	digital	i017	-	resource blocked
108	LT line compressor 2 thermal switch alarm	digital	i022	-	resource blocked
109	LT line compressor 3 thermal switch alarm	digital	i027	-	resource blocked
110	LT line compressor 4 thermal switch alarm	digital	i032	-	resource blocked
111	LT line compressor 5 thermal switch alarm	digital	i037	-	resource blocked
112	LT line compressor 6 thermal switch alarm	digital	i042	-	resource blocked
113	LT line compressor 7 thermal switch alarm	digital	i047	-	resource blocked
114	LT line compressor 8 thermal switch alarm	digital	i052	-	resource blocked
115	LT line compressor 1 high pressure alarm	digital	i018	X	resource blocked
116	LT line compressor 2 high pressure alarm	digital	i023	X	resource blocked
117	LT line compressor 3 high pressure alarm	digital	i028	X	resource blocked
118	LT line compressor 4 high pressure alarm	digital	i033	X	resource blocked
119	LT line compressor 5 high pressure alarm	digital	i038	X	resource blocked
120	LT line compressor 6 high pressure alarm	digital	i043	X	resource blocked
121	LT line compressor 7 high pressure alarm	digital	i048	X	resource blocked
122	LT line compressor 8 high pressure alarm	digital	i053	X	resource blocked
131	LT line compressor 1 general alarm	digital	i021	-	resource blocked
132	LT line compressor 2 general alarm	digital	i026	-	resource blocked
133	LT line compressor 3 general alarm	digital	i031	-	resource blocked
134	LT line compressor 4 general alarm	digital	i036	-	resource blocked
135	LT line compressor 5 general alarm	digital	i041	-	resource blocked
136	LT line compressor 6 general alarm	digital	i046	-	resource blocked
137	LT line compressor 7 general alarm	digital	i051	-	resource blocked

ID	description	alarm type	input (1)	bypass	effect
138	**LT line compressor 8 general alarm**	digital	i056	-	resource blocked
139	**LT line compressor 1 high oil level alarm**	digital	i019	X	resource blocked
140	**LT line compressor 2 high oil level alarm**	digital	i024	X	resource blocked
141	**LT line compressor 3 high oil level alarm**	digital	i029	X	resource blocked
142	**LT line compressor 4 high oil level alarm**	digital	i034	X	resource blocked
143	**LT line compressor 5 high oil level alarm**	digital	i039	X	resource blocked
144	**LT line compressor 6 high oil level alarm**	digital	i044	X	resource blocked
145	**LT line compressor 7 high oil level alarm**	digital	i049	X	resource blocked
146	**LT line compressor 8 high oil level alarm**	digital	i054	X	resource blocked
147	**LT line compressor 1 low oil level alarm**	digital	i025	X	resource blocked
148	**LT line compressor 2 low oil level alarm**	digital	i020	X	resource blocked
149	**LT line compressor 3 low oil level alarm**	digital	i025	X	resource blocked
150	**LT line compressor 4 low oil level alarm**	digital	i030	X	resource blocked
151	**LT line compressor 5 low oil level alarm**	digital	i035	X	resource blocked
152	**LT line compressor 6 low oil level alarm**	digital	i040	X	resource blocked
153	**LT line compressor 7 low oil level alarm**	digital	i045	X	resource blocked
154	**LT line compressor 8 low oil level alarm**	digital	i050	X	resource blocked

(1) Alarms powered by probe with a backup: if the probe is inoperable, the backup probe, where configured, will be used instead. In the table they are indicated in the following manner: main probe/backup probe.
NOTE. Alarms 105/106: 9P - 07P converted in temperature (or 08P backup converted in temperature)

7.3. High Temperature (HT line)

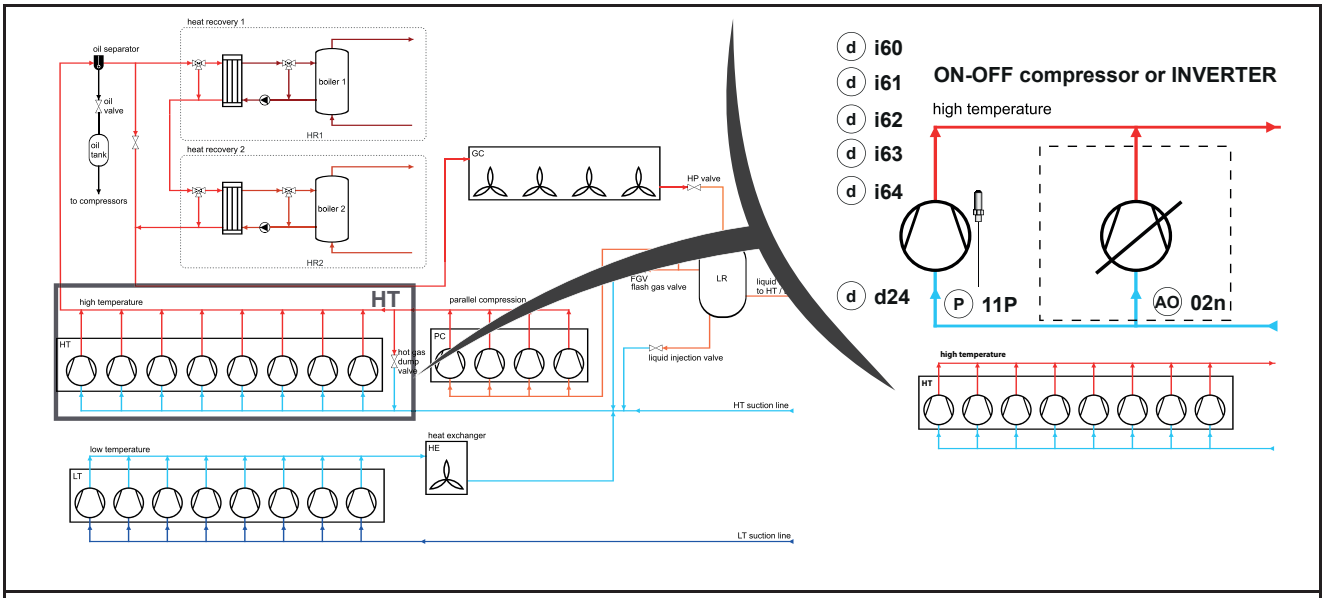

Fig. 70. CO2 Boost System - HT line compressors

7.3.1. HT line I/O allocation

See **CHAPTER 3 "Electrical connections" page 33** for the number and type of analogue outputs used and for information on the symbols used on labels supplied with the controller.

7.3.1.1. HT line compressor digital and analogue output allocation

Resource Allocation	Label	Parameter	Description	Notes
digital	**12.225 - d24**	HT compr. 1 enable	HT line compressor enabling	03.001 - HCn > 0
	12.226 - d25	HT compr. 2 enable		03.001 - HCn > 1
	12.227 - d26	HT compr. 3 enable		03.001 - HCn > 2
	12.228 - d27	HT compr. 4 enable		03.001 - HCn > 3
	12.229 - d28	HT compr. 5 enable		03.001 - HCn > 4
	12.230 - d29	HT compr. 6 enable		03.001 - HCn > 5
	12.231 - d30	HT compr. 7 enable		03.001 - HCn > 6
	12.232 - d31	HT compr. 8 enable		03.001 - HCn > 7
	12.233 - d32	HT hot gas dump enable	HT hot gas dump enable	
analog	**12.252 - 02n**	HT inverter 1	HT line inverter output regulation	03.001 - HCn > 0

7.3.1.2. HT line compressor probe allocation

Label	Probe parameter	Label	Backup probe parameter	Description
12.015 - 11P	HT suction press.	**12.018 - 12P**	HT suct. press. bck	suction probe and backup *(1)*
12.016 - 11L	HT min suct. press.	**12.019 - 12L**	HT min suct. P bck	suction probe minimum threshold
12.017 - 11H	HT max suct. press.	**12.020 - 12H**	HT max suct. P bck	suction probe maximum threshold
12.021 - 13P	HT suction temp.	-	-	suction probe in temperature
12.022 - 14P	HT discharge temp.	**-**	-	discharge probe

(1) If both probes are in error the percentage output is defined by 03.009 - LPr

For more information refer to **“CHAPTER 8” “Parameters” page 149**.

7.3.1.3. HT line compressor digital input allocation

	Label	Parameter	Description	Notes
Alloc digital	**12.117 - i58**	HT Lo press. switch	LT line low pressure digital input	03.001 - HCn > 0
	12.118 - i59	HT inverter motor protection	HT line inverter motor protection digital input	
Alloc digital 1	**12.119 - i60**	HT compr. 1 thermal	HT line compressor 1 thermal digital input	03.001 - HCn > 0 Compressor 1
	12.120 - i61	HT compr. 1 Hi press.	HT line compressor 1 high pressure digital input	
	12.121 - i62	HT compr. 1 oil Hi	HT line compressor 1 high oil level digital input	
	12.122 - i63	HT compr. 1 oil Lo	HT line compressor 1 low oil level digital input	
	12.123 - i64	HT compr. 1 gen.alarm	HT line compressor 1 general alarm digital input	
Alloc digital 2	**12.124 - i65**	HT compr. 2 thermal	HT line compressor 2 thermal digital input	03.001 - HCn > 1 Compressor 2
	12.025 - i66	HT compr. 2 Hi press.	HT line compressor 2 high pressure digital input	
	12.126 - i67	HT compr. 2 oil Hi	HT line compressor 2 high oil level digital input	
	12.127 - i68	HT compr. 2 oil Lo	HT line compressor 2 low oil level digital input	
	12.128 - i69	HT compr. 2 gen.alarm	HT line compressor 2 general alarm digital input	
Alloc digital 3	**12.129 - i70**	HT compr.3 thermal	HT line compressor 3 thermal digital input	v.001 - LCn > 2 Compressor 3
	12.130 - i71	HT compr.3 Hi press.	HT line compressor 3 high pressure digital input	
	12.131 - i72	HT compr. 3 oil Hi	HT line compressor 3 high oil level digital input	
	12.132 - i73	HT compr. 3 oil Lo	HT line compressor 3 low oil level digital input	
	12.133 - i74	HT compr.3 gen.alarm	HT line compressor 3 general alarm digital input	
Alloc digital 4	**12.134 - i75**	HT compr. 4 thermal	HT line compressor 4 thermal digital input	03.001 - HCn > 3 Compressor 4
	12.135 - i76	HT compr.4 Hi press.	HT line compressor 4 high pressure digital input	
	12.136 - i77	HT compr. 4 oil Hi	HT line compressor 4 high oil level digital input	
	12.137 - i78	HT compr. 4 oil Lo	HT line compressor 4 low oil level digital input	
	12.138 - i79	HT compr.4 gen.alarm	HT line compressor 4 general alarm digital input	
Alloc digital 5	**12.139 - i80**	HT compr.5 thermal	HT line compressor 5 thermal digital input	03.001 - HCn > 4 Compressor 5
	12.140 - i81	HT compr.5 Hi press.	HT line compressor 5 high pressure digital input	
	12.141 - i82	HT compr. 5 oil Hi	HT line compressor 5 high oil level digital input	
	12.142 - i83	HT compr. 5 oil Lo	HT line compressor 5 low oil level digital input	
	12.143 - i84	HT compr.5 gen.alarm	HT line compressor 5 general alarm digital input	
Alloc digital 6	**12.144 - i85**	HT compr. 6 thermal	HT line compressor 6 thermal digital input	03.001 - HCn > 5 Compressor 6
	12.145 - i86	HT compr.6 Hi press.	HT line compressor 6 high pressure digital input	
	12.146 - i87	HT compr. 6 oil Hi	HT line compressor 6 high oil level digital input	
	12.147 - i88	HT compr. 6 oil Lo	HT line compressor 6 low oil level digital input	
	12.148 - i89	HT compr. 6 gen.alarm	HT line compressor 6 general alarm digital input	
Alloc digital 7	**12.149 - i90**	HT compr.7 thermal	HT line compressor 7 thermal digital input	03.001 - HCn > 6 Compressor 7
	12.150 - i91	HT compr. 7 Hi press.	HT line compressor 7 high pressure digital input	
	12.151 - i92	HT compr. 7 oil Hi	HT line compressor 7 high oil level digital input	
	12.152 - i93	HT compr. 7 oil Lo	HT line compressor 7 low oil level digital input	
	12.153 - i94	HT compr. 7 gen.alarm	HT line compressor 7 general alarm digital input	
Alloc digital 8	**12.154 - i95**	HT compr. 8 thermal	HT line compressor 8 thermal digital input	03.001 - HCn > 7 Compressor 8
	12.155 - i96	HT compr. 8 Hi press.	HT line compressor 8 high pressure digital input	
	12.156 - i97	HT compr. 8 oil Hi	HT line compressor 8 high oil level digital input	
	12.157 - i98	HT compr. 8 oil Lo	HT line compressor 8 low oil level digital input	
	12.158 - i99	HT compr. 8 gen.alarm	HT line compressor 8 general alarm digital input	

7.3.2. HT line regulation

The regulation allows up to 8 compressors, of which maximum one at variable speed (8 complete digital compressors or maximum 7 ON/OFF compressors + 1 INVERTER compressor at variable speed).
The suction pressure is adjusted (12.016 - 11P) according to the setpoint 03.011 - HSt.
The lower set limit is 02.012 - LLS and the upper limit 03.013 - HHS.
The regulation is based on a PID with proportional band; it is modulated only with the INVERTER outside of the Dead Band.
Below and above the threshold 03.014 - HbP an ON-OFF step is switched on or off.
The regulation is forced to zero below the set 03.043 - Hit.

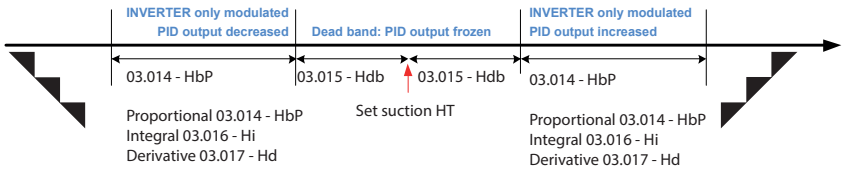

Fig. 71. HT compressor PID regulation Dead Band

7.3.2.1. Inverter Output

Compressors controlled by inverter, can only operate above a pre-set speed (which depends on compressor type). Frequency plate data is found in the technical sheet attached to the INVERTER, or on the compressor plate. The INVERTER rated power is defined by 03.039 - HiP.
The INVERTER number (no INVERTER or INVERTER) is defined by 03.034-inH = 0 or 1.

The INVERTER can be piloted via the selected analogue output **12.252 - 02n**.
This output varies from 0...10 V, however the actuation window can be limited via parameters 03.037 - HiL and 03.038 - HiH. Minimum speed such that the compressor has the torque needed to be able to switch-on is defined by 03.044 - HSP. This speed is expressed as a percentage, 1% corresponds to the minimum inverter speed, 100% the maximum.
The working frequency window of the INVERTER is defined by parameters 03.035 - HLF minimum frequency and 03.036 - HHF maximum frequency.

When the INVERTER output is at 0% and the regulation requires power, the INVERTER output is forced to 03.044 - HSP for a period of time 03.045 - HiS.
The step on-off mode is defined by parameter 03.040 - Hir, HT line inverter mode.
- if 03.040 - Hir = 0 the activation/deactivation is immediate,
- if 03.040 - Hir = 1 the activation/deactivation occurs after the period set by 03.046 - HiE at 100% power.

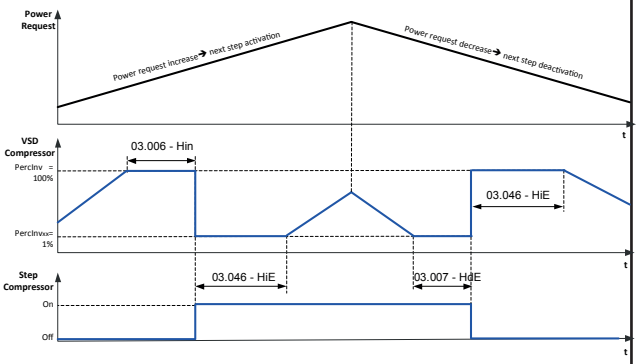

Fig. 72. activation / deactivation
03.040 = 0

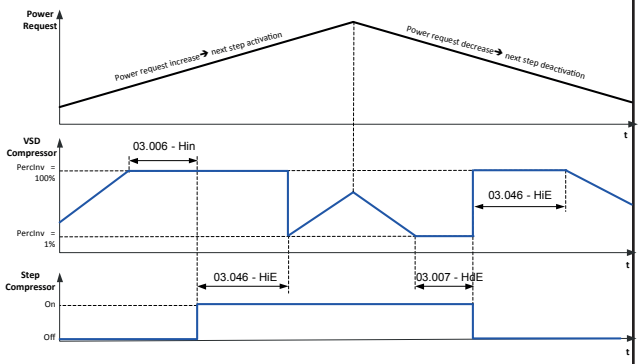

Fig. 73. activation / deactivation
03.040 = 1

The INVERTER modulates more or less quickly depending on the pressure. If it is very close to the suction set, the increase/decrease in percentage is defined by 03.041 - HSS, typically 1% per second.
Far from the set the increase/decrease is “faster” and defined similarly by 03.042 - HSF
The digital ON/OFF compressors are managed as follows:
- Step activation: if the INVERTER activation percentage is 100% for 03.006 - Hin and an ON/OFF compressor is available on start-up. When the step is on the percentage is forced to 1% or 100% according to 03.040 - Hir
- Step deactivation: if the INVERTER activation percentage is 1% for 03.007 - HdE and an ON/OFF compressor is available on start-up.

The power step activation and deactivation must comply with the activation and release times between resources 03.003 - Hon, 03.004 - HnF, 03.005 - HoF and is also dependent on parameter 01.005 - rot.

Enter and deactivate steps

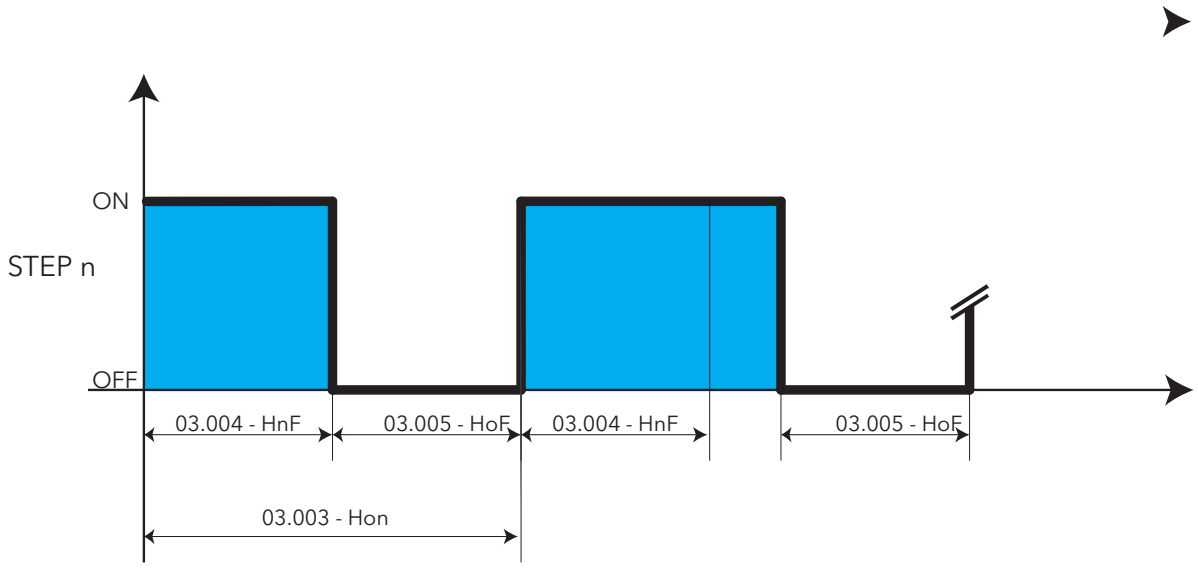

Fig. 74. HT compressor protection

7.3.2.2. HT line Economy function

The Economy function is used to temporarily modify the suction set control on the compressor HT line. The activation request may come from:
• time bands
• digital input appropriately configured **12.064 - i05**
• supervision
In all cases an offset is added to the suction setpoint 03.011 - HSt. If the economy function is active with different modes the offsets for each activation are added together.
Two parameters 03.018 - Hod are foreseen as offset from Digital Input and 03.019 - HoS as offset from time bands.
For activation from supervision, it is possible to write the required offset value remotely.

This value will be summed to the rated offset if:
• Within the limits expressed by parameters 03.021 - HHo and 03.020 - HLo.
• A validity timer value for this offset is also written remotely.

This timer is also used to prevent the offset from remaining permanently applied in the event of accidental disconnection of the device. If the offset application needs to be extended, the timer must be periodically refreshed.
It is possible to use the supervision offset to control the suction regulation SetPoint depending on the ambient temperature (for instance the temperature of the display area of the supermarket.)

7.3.2.3. HT line power limitation

It is possible to limit the power globally actuated by the compressor stage. The limit is set by parameter 03.010 - HPH and is understood as a percentage on the maximum power that can be actuated by the stage calculated using the compressor rated data (parameters 03.002 - HrP and 02.039 - HiP). If the power required by the control exceeds the limit, the power expressed by the limit will be actuated.
The activation request may come from:
• time bands
• digital input appropriately configured **12.063 - i04**
• supervision

If 03.010 - HPH = 0 the limitation is disabled.
When active 03.010 - HPH <> 0 if the power percentage of the compressors exceeds 03.039 - HiP for INVERTER compressor and 03.002 - HrP for ON/OFF digital compressors the power percentage is forced to 03.010 - HPH.

7.3.3. HT line pressure limitation

This protection function prevents excessive discharge pressure in the HT line compressors.
The pressure limiter is always enabled and is powered by the HT line discharge pressure (14P). If the discharge pressure transducer is not mounted or is inoperable, the HP valve probe (16P) can be used: see Alarms probe and backup probes.
If the pressure rises above the compressor stop threshold: Pressure > 11.115 - A117 the pressure limiter is active and the compressors will be switched off to avoid problems for the system.
If the pressure drops below the warning threshold Pressure < 11.116 - A118 the pressure limiter is disabled and the regulation runs normally.
If the pressure is between the thresholds 11.116 - A118 < Pressure < 11.115 - A117 the compressors may be switched off (and the INVERTER cannot increase but only decrease its own power in %) but they cannot be reactivated (and the INVERTER cannot increase its own power in %)
NOTE. The thresholds are independent from the high discharge pressure thresholds (High and low temperature alarms)
When the pressure limiter is ON, a specific alarm icon flashes, and the ON-OFF compressors and INVERTER are off.

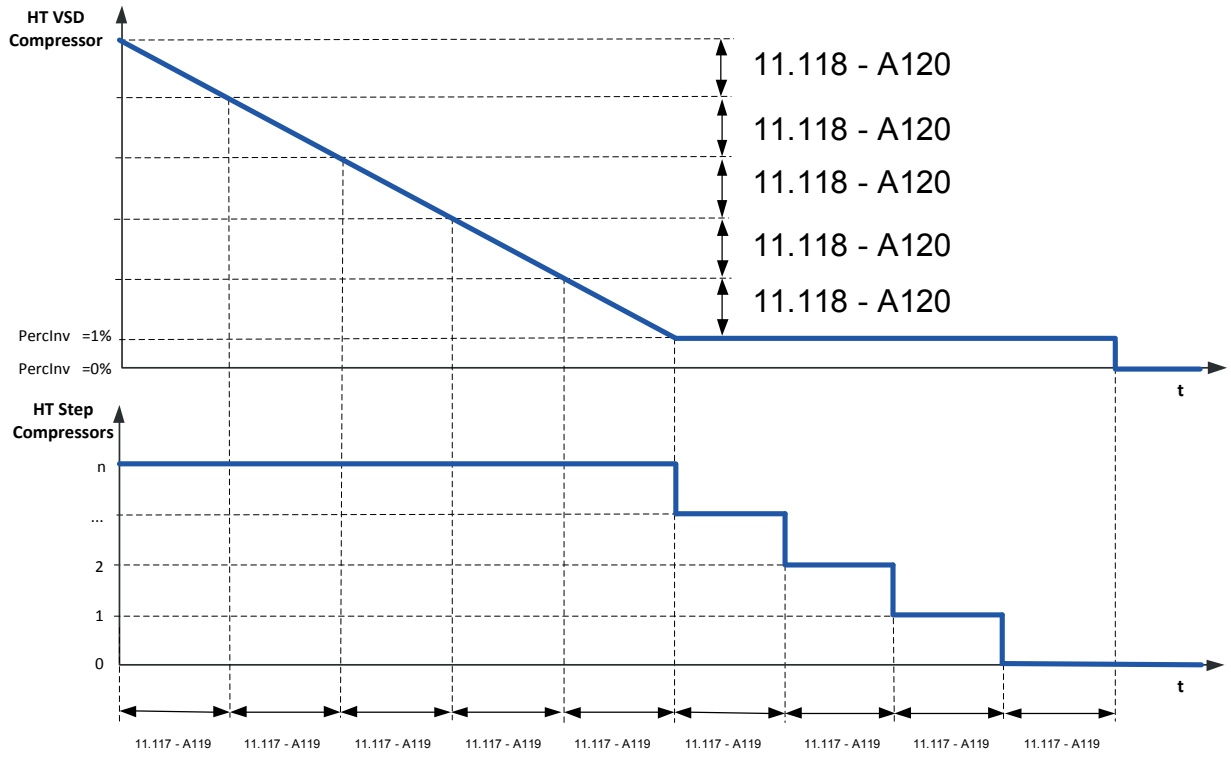

Fig. 75. HT compressor pressure limitation

NOTE. PRESSURE > 11.115 - A117

7.3.4. HT line parameters | 3-3 High Temp

LABEL	LABEL	DESCRIPTION	RANGE	DEFAULT	M.U.	LEVEL
3-3-1 Compressors						
03.001 - HCn	**Num. of compressors**	HT line compressors number	0...8	3	num	**3**
03.002 - HrP	**Compr. rated power**	HT line compressor rated power	0...65535	100	num	**3**
03.003 - Hon	**Compr. on-on time**	HT line compressor on-on time Minimum time, in minutes, between turning the same compressor on twice.	0...999	120	s	**2**
03.004 - HnF	**Compr. on-off time**	HT line compressor on-off time Minimum compressor operating time before being turned off. The 'called' compressor stays on at least for the time set by this parameter.	0...3600	20	s	**2**
03.005 - HoF	**Compr. off-on time**	HT line compressor off-on time Minimum time, in minutes, between turning the same compressor off and back on again.	0...3600	30	s	**2**
03.006 - Hin	**Compr.step inc delay**	HT line compressors interstep time On Delay time between the calls of two different steps.	0...3600	30	s	**2**
03.007 - Hde	**Compr.step dec delay**	HT line compressors interstep time Off Delay time between switching off two different steps.	0...3600	20	s	**2**
03.008 - HSd	**Shutdown time**	Shutdown time HT line	0...3600	15	s	**2**
03.009 - HPr	**Out error perc.**	HT line % power when suction probe is in error	0...100	0	%	**2**
03.010 - HPH	**Max out perc.**	HT line power limitation % 0 = disabled	0...100	0	%	**2**
3-3-2 Regulation		01.002-SbP =1,2->bar | 01.002-SbP =3,4->psi				
03.011 - HSt	**Set**	HT line regulation set	HLS...HHS HLS...HHS	25.0 -10.4	bar/psi °C/°F	**1**
03.012 - HLS	**Set min value**	HT line set min value	-1.0...HHS -200.0...HHS	20.0 -17.7	bar/psi °C/°F	**2**
03.013 - HHS	**Set max value**	HT line set max value	HLS...160.0 HLS...800.0	40.0 6.4	bar/psi °C/°F	**2**
03.014 - HbP	**Proportional band**	HT line proportional band	0.0.0...160.0.0 0.0.0...800.0.0	0.0 0.0	bar/psi °C/°F	**2**

LABEL	LABEL	DESCRIPTION	RANGE	DEFAULT	M.U.	LEVEL
03.015 - Hdb	**Dead band**	HT line dead band	0.0.0...160.0.0	0.0	bar/psi	**2**
			0.0.0...800.0.0	0.0	°C/°F	
03.016 - Hi	**Integral coeff.**	HT line integral factor	0...65535	400	num	**2**
03.017 - Hd	**Derivative coeff.**	HT line derivative factor	0...65535	0	num	**2**
03.018 - Hod	**Offset from DI**	HT line economy offset from digital input 12.064 - i05	-1.0...160.0	7.0	bar/psi	**2**
			-200.0...800.0	8.6	°C/°F	**2**
03.019 - HoS	**Offset from schedul.**	HT line economy offset from scheduler	-1.0...160.0	8.0	bar/psi	**2**
			-200.0...800.0	9.7	°C/°F	**2**
03.020 - HLo	**Offset min value**	HT line economy offset min value from supervisor	-1.0...160.0	5.0	bar/psi	**2**
			-200.0...800.0	7.3	°C/°F	**2**
03.021 - HHo	**Offset max value**	HT line economy offset max value from supervisor	-1.0...160.0	5.0	bar/psi	**2**
			-200.0...800.0	6.3	°C/°F	**2**
03.022 - Hdt	**HG dump start thres.**	Hot gas dump start threshold Pressure dump start threshold	-200.0...800.0	8.0	°C/°F	**2**
03.023 - HdS	**HG dump stop thres.**	Hot gas dump stop threshold Pressure dump stop threshold	-200.0...800.0	10.0	°C/°F	**2**
03.024 - int	**Liquid inject. mode**	Liquid injection mode 0=disabled 1=Superheat 2=discharge 3=Superheat + discharge	0...3	0	num	**2**
03.027 - ith	**Liquid inj.SH thres.**	Liquid injection superheat threshold	-200.0...800.0	0.0	°C/°F	**2**
03.028 - idi	**Liquid inj.SH diff.**	Liquid injection superheat differential	-200.0...800.0	0.0	°C/°F	**2**
03.029 - idt	**Liquid inj.disc. thr.**	Liquid injection discharge temperature threshold	-200.0...800.0	0	°C/°F	**2**
03.030 - idd	**Liquid inj.disc. diff**	Liquid injection discharge temperature differential	-200.0...800.0	0	°C/°F	**2**
03.031 - iot	**Liquid inj. on t.out**	Liquid injection on timeout	0...999	0	s	**2**
03.032 - iFt	**Liquid inj.off t.out**	Liquid injection off timeout	0...999	0	s	**2**
03.033 - iHr	**Liquid inj.max retr.**	Liquid injection on off cycles max number Valve forced off when this number is exceeded	0...255	0	num	**2**
3-3-3 Inverter		01.002-SbP =1,2->bar | 01.002-SbP =3,4->psi				
03.034 - inH	**Num. of inverters**	HT line inverter min driving voltage	0...1	1	num	**3**
03.035 - HLF	**Inv. min freq.**	HT line inverter max driving voltage	0...200	30	(Hz)	**3**
03.036 - HHF	**Inv. max freq.**	HT line inverter rated power	0...200	60	(Hz)	**3**

LABEL	LABEL	DESCRIPTION	RANGE	DEFAULT	M.U.	LEVEL
03.037 - HiL	**Voltage min**	HT line inverter min driving voltage	0.00...10.00	0.00	Volt	**3**
03.038 - HiH	**Voltage max**	HT line inverter max driving voltage	0.00...10.00	10.00	Volt	**3**
03.039 - HiP	**Inv. rated power**	HT line % inverter variation far from set	0...65535	100	(Hz)	**3**
03.040 - Hir	**Inv. regulation mode**	HT line compressors shutdown threshold	0...100	0	num	**3**
03.041 - HSS	**Inv. % var. near set**	HT line % inverter variation near set	0...100	3	%	**3**
03.042 - HSF	**Inv. % var. far set**	HT line % inverter variation far from set	0...100	8	%	**3**
03.043 - Hit	**Inv. off threshold**	HT line compressors shutdown threshold	-200.0...800.0	22.0	bar/psi	**3**
			-1.0...160.0	-14.7	°C/°F	
03.044 - HSP	**Inverter start %**	HT line inverter start %	0...100	1	%	**3**
03.045 - HiS	**Inverter start time**	HT line inverter start time	0...3600	30	s	**3**
03.046 - HiE	**Inverter reg. period**	HT line inverter timeout 1% (shutdown) or 100% (step activation)	0...3600	10	s	**3**

7.3.5. HT line compressor alarms

7.3.5.1. HT line probe errors

If both probes configured as HT suction probes (11P and backup probe 12P) are in error, the regulation or % of HT line power is forced to the value defined in parameter 03.009 - HPr.
If the value 03.009 - HPr = 0 the HT line compressors are blocked.

7.3.5.2. HT line alarm parameters

3-11-3 High Temp						
11.075 - A77	**HT low suct. press.**	HT line alarm mode low suction pressure	0...2	0	num	**2**
		HT line alarm priority low suction pressure	0...3	2	num	**2**
11.076 - A78	**HT high suct. press**	HT line alarm mode high suction pressure	0...2	0	num	**2**
		HT line alarm priority high suction pressure	0...3	0	num	**2**
11.077 - A79	**HT high disch. press.**	HT line alarm mode high discharge pressure	0...2	0	num	**2**
		HT line alarm priority high discharge pressure	0...3	1	num	**2**
11.078 - A80	**HT high disch. temp.**	HT line alarm mode high discharge temperature	0...2	0	num	**2**
		HT line alarm priority high discharge temperature	0...3	1	num	**2**
11.079 - A81	**HT low superheat**	HT line alarm mode low superheat	0...2	0	num	**2**
		HT line alarm priority low superheat	0...3	1	num	**2**
11.080 - A82	**HT high superheat**	HT line alarm mode high superheat.	0...2	0	num	**2**
		HT line alarm priority high superheat.	0...3	0	num	**2**
11.081 - A83	**HT comp.therm. switch**	HT line alarm mode compressor thermal switch	0...2	0	num	**2**
		HT line alarm priority compressor thermal switch	0...3	0	num	**2**
11.082 - A84	**HT comp.therm. switch**	HT line max number of alarms in the window time compressor thermal switch	5...255	5	min	**2**
		HT line window time compressor thermal switch	0...32	0	num	**2**

11.083 - A85	**HT comp. high press.**	HT line alarm mode high pressure compressor	0...2	0	num	**2**
		HT line alarm priority high pressure compressor	0...3	0	num	**2**
11.084 - A86	**HT comp. high press.**	HT line max number of alarms in the window time high pressure compressor	5...255	5	min	**2**
		HT line window time high pressure compressor	0...32	0	num	**2**
11.085 - A87	**HT comp. oil**	HT line alarm mode oil compressor	0...2	0	num	**2**
		HT line alarm priority oil compressor	0...3	0	num	**2**
11.086 - A88	**HT comp. oil**	HT line max number of alarms in the window time compressor oil	5...255	5	min	**2**
		HT line window time compressor oil	0...32	0	num	**2**
11.087 - A89	**HT compr. gen. alarm**	HT line alarm mode general compressor	0...2	0	num	**2**
		HT line alarm priority general compressor	0...3	3	num	**2**
11.088 - A90	**HT compr. gen. alarm**	HT line max number of alarms in the window time general compressor	5...255	5	min	**2**
		HT line window time general compressor	0...32	0	num	**2**
11.089 - A91	**HT inverter motor protection**	HT line alarm mode inverter motor protection	0...2	0	num	**2**
		HT line alarm priority inverter motor protection	0...3	0	num	**2**
11.090 - A92	**HT inverter motor protection**	HT line max number of alarms in the window time inverter motor protection	5...255	5	min	**2**
		HT line window time inverter motor protection	0...32	0	num	**2**
11.091 - A93	**HT low press. switch**	HT line alarm mode low pressure switch	0...2	0	num	**2**
		HT line alarm priority low pressure switch	0...3	3	num	**2**
11.092 - A94	**HT low press. switch**	HT line max number of alarms in the window time low pressure switch	5...255	5	min	**2**
		HT line window time low pressure switch	0...32	0	num	**2**
11.093 - A95	**HT disc. P probe err**	HT line alarm mode discharge pressure probe	0...2	0	num	**2**
		HT line alarm priority discharge pressure probe	0...3	1	num	**2**
11.094 - A96	**Low press. alm byp**	HT line low pressure switch alarm bypass	0...999	0	s	**2**
11.095 - A97	**High oil comp. byp**	HT line compressor oil high level alarm bypass	0...999	0	s	**2**
11.096 - A98	**Low oil comp. byp**	HT line compressor oil low level alarm bypass	0...999	0	s	**2**
11.097 - A99	**HP comp. alm byp**	HT line high pressure compressor alarm bypass	0...999	0	s	**2**
11.098 - A100	**HT low suct. press.**	HT line low suction pressure alarm threshold	-1.0...160.0	18.0	bar/ psi	**2**
		HT line low suction pressure alarm threshold	-200.0...800.0	-21.0	°C/°F	**2**
11.099 - A101	**Low suct P diff.**	HT line low suction pressure alarm differential	0.1...160.0	1.0	bar/ psi	**2**
		HT line low suction pressure alarm differential	0.1...800.0	1.8	°C/°F	**2**
11.100 - A102	**Low suct. press. byp**	HT low suction pressure alarm bypass	0...999	0	s	**2**
11.101 - A103	**HT high suct. press**	HT line high suction pressure alarm threshold	-1.0...160.0	35.0	bar/ psi	**2**
		HT line high suction pressure alarm threshold	-200.0...800.0	1.3	°C/°F	**2**

11.102 - A104	**High suct P diff.**	HT line high suction pressure alarm differential	0.1...160.0	4.8	bar/ psi	**2**
		HT line high suction pressure alarm differential	0.1...800.0	5.2	°C/°F	**2**
11.103 - A105	**High suct.press. byp**	HT line high suction pressure alarm bypass	0...999	0	s	**2**
11.104 - A106	**HT high disch. press.**	HT line high discharge pressure alarm threshold	-1.0...160.0	0	bar/ psi	**2**
		-				
11.105 - A107	**High disch P diff.**	HT line high discharge pressure alarm differential	0.1...160.0	1.1	bar/ psi	**2**
		-				
11.106 - A108	**High disc.press. byp**	HT line high discharge pressure alarm bypass	0...999	0	s	**2**
11.107 - A109	**HT high disch. temp.**	HT line high discharge temperature alarm threshold	-200.0...800.0	125.0	°C/°F	**2**
11.108 - A110	**High disch T diff.**	HT line high discharge temperature alarm differential	0.1...800.0	5.0	°C/°F	**2**
11.109 - A111	**High disch.temp. byp**	HT line high discharge temperature alarm bypass	0...999	1250	s	**2**
11.110 - A112	**Min super heating**	HT line min superheat	-200.0...800.0	6.0	°C/°F	**2**
11.111 - A113	**Low superheat byp**	HT line low superheat alarm bypass	0...999	90	s	**2**
11.112 - A114	**Max super heating**	HT line max superheat	-200.0...800.0	0	°C/°F	**2**
11.113 - A115	**High superheat. byp**	HT line high superheat alarm bypass	0...999	0	s	**2**
11.114 - A116	**Super heating diff.**	HT line superheat differential	1.0...800.0	1.0	°C/°F	**2**
11.115 - A117	**Limiter activation**	HT line limiter activation	-1.0...160.0	106.0	bar/ psi	**2**
		-				
11.116 - A118	**Limiter deactivation**	HT limiter deactivation	-1.0...160.0	105.0	bar/ psi	**2**
		-				
11.117 - A119	**Limiter reduct. time**	HT line pressure limiter reduction time	0...999	60	s	**2**
11.118 - A120	**Limiter reduct. perc.**	HT line pressure limiter reduction percentage	0...100	10	%	**2**

7.3.5.3. HT line alarms table

ID	description	alarm type	Priority	input (1)	bypass	effect
4	**HT line suction pressure probe failure**	probe	-	11P	-	backup probe
5	**HT line backup suction pressure probe failure**	probe	-	12P	-	force out or plant shutdown
8	**HT line discharge pressure probe failure**	probe	X	14P	-	warning or plant shutdown
9	**HT line suction temperature probe failure**	probe	-	13P	-	warning - display only
11	**HT line discharge temperature probe failure**	probe	-	15P	-	warning - display only
193	**HT line motor protection inverter alarm**	digital	X	i059	-	resource blocked
200	**HT line low pressure switch alarm**	digital	X	i058	X	plant shutdown
201	**HT line high suction pressure alarm**	input	X	11P / 12P	X	plant shutdown
202	**HT line low suction pressure alarm**	input	X	11P / 12P	X	plant shutdown
203	**HT line high discharge pressure alarm**	input	X	14P	X	plant shutdown
204	**HT line high discharge temperature alarm**	input	X	15P	X	plant shutdown
205	**HT line low superheat alarm**	input	X	13P / 12P	X	plant shutdown
206	**HT line high superheat alarm**	input	X	13P / 12P	X	plant shutdown
207	**HT line compressor 1 thermal switch alarm**	digital	X	i060	-	resource blocked
208	**HT line compressor 2 thermal switch alarm**	digital	X	i065	-	resource blocked
209	**HT line compressor 3 thermal switch alarm**	digital	X	i070	-	resource blocked
210	**HT line compressor 4 thermal switch alarm**	digital	X	i075	-	resource blocked
211	**HT line compressor 5 thermal switch alarm**	digital	X	i080	-	resource blocked
212	**HT line compressor 6 thermal switch alarm**	digital	X	i085	-	resource blocked
213	**HT line compressor 7 thermal switch alarm**	digital	X	i090	-	resource blocked
214	**HT line compressor 8 thermal switch alarm**	digital	X	i095	-	resource blocked
215	**HT line compressor 1 high pressure alarm**	digital	X	i061	X	resource blocked
216	**HT line compressor 2 high pressure alarm**	digital	X	i066	X	resource blocked
217	**HT line compressor 3 high pressure alarm**	digital	X	i071	X	resource blocked
218	**HT line compressor 4 high pressure alarm**	digital	X	i076	X	resource blocked
219	**HT line compressor 5 high pressure alarm**	digital	X	i081	X	resource blocked
220	**HT line compressor 6 high pressure alarm**	digital	X	i086	X	resource blocked
221	**HT line compressor 7 high pressure alarm**	digital	X	i091	X	resource blocked
222	**HT line compressor 8 high pressure alarm**	digital	X	i096	X	resource blocked
231	**HT line compressor 1 general alarm**	digital	X	i064	-	resource blocked
232	**HT line compressor 2 general alarm**	digital	X	i069	-	resource blocked
233	**HT line compressor 3 general alarm**	digital	X	i074	-	resource blocked
234	**HT line compressor 4 general alarm**	digital	X	i079	-	resource blocked
235	**HT line compressor 5 general alarm**	digital	X	i084	-	resource blocked
236	**HT line compressor 6 general alarm**	digital	X	i089	-	resource blocked

ID	description	alarm type	Priority	input (1)	bypass	effect
237	**HT line compressor 7 general alarm**	digital	X	i094	-	resource blocked
238	**HT line compressor 8 general alarm**	digital	X	i099	-	resource blocked
239	**HT line compressor 1 high oil level alarm**	digital	X	i062	X	resource blocked
240	**HT line compressor 2 high oil level alarm**	digital	X	i067	X	resource blocked
241	**HT line compressor 3 high oil level alarm**	digital	X	i072	X	resource blocked
242	**HT line compressor 4 high oil level alarm**	digital	X	i077	X	resource blocked
243	**HT line compressor 5 high oil level alarm**	digital	X	i082	X	resource blocked
244	**HT line compressor 6 high oil level alarm**	digital	X	i087	X	resource blocked
245	**HT line compressor 7 high oil level alarm**	digital	X	i092	X	resource blocked
246	**HT line compressor 8 high oil level alarm**	digital	X	i097	X	resource blocked
247	**HT line compressor 1 low oil level alarm**	digital	X	i063	X	resource blocked
248	**HT line compressor 2 low oil level alarm**	digital	X	i068	X	resource blocked
249	**HT line compressor 3 low oil level alarm**	digital	X	i073	X	resource blocked
250	**HT line compressor 4 low oil level alarm**	digital	X	i078	X	resource blocked
251	**HT line compressor 5 low oil level alarm**	digital	X	i083	X	resource blocked
252	**HT line compressor 6 low oil level alarm**	digital	X	i088	X	resource blocked
253	**HT line compressor 7 low oil level alarm**	digital	X	i093	X	resource blocked
254	**HT line compressor 8 low oil level alarm**	digital	X	i098	X	resource blocked

(1) Alarms powered by probe with a backup: if the probe is inoperable, the backup probe, where configured, will be used instead. In the table they are indicated in the following manner: main probe/backup probe.
NOTE. Alarms 205/206: 13P – 11P converted in temperature (or 12P backup in temperature)

7.4. High Pressure (HP)

The output temperature of the Gas cooler 19T determines a specific pressure value 16P (Gas cooler High Pressure), and the pressure affects the gas flow (see “7.7.1. Flash Gas Valve (FGV)” page 136).
The purpose of the pressure valve (High Pressure HP Valve) is to control the high pressure value via the valve opening percentage.
The high pressure setpoint is a function of the gascooler output temperature (19P Gascooler output temperature probe, or 20P for backup probe).
The high pressure setpoint depends on the temperature of the Gas cooler output gas.
The temperature probe is defined and positioned according to parameter 05.001 - FPC.
The temperature probe can be located close to the gascooler (19P) or close to the rack (20P). The installer can select where to place the temperature sensor:

- 05.001 - FPC = 0 or 3: gascooler outlet temperature (19P)
- 05.001 - FPC = 1 or 2: rack inlet temperature (20P)

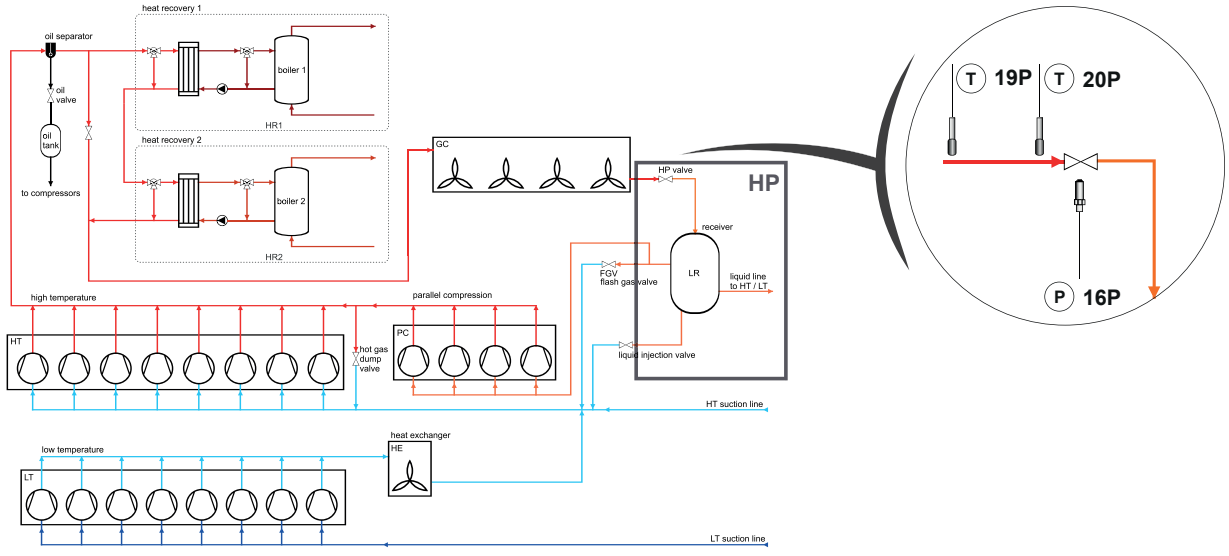

Fig. 76. CO2 Boost System - High Pressure HP valve

7.4.1. I/O HP allocation

Label	Parameter	Description	Notes
12.026 - 16P	HP valve press.	HP high pressure valve pressure	-
12.033 - 19P	Gascooler out 1	gas cooler output temperature probe	-
12.034 - 20P	Gascooler out 2	gas cooler backup output temperature probe	backup probe *(1)*

(1) If both probes are in error the percentage output is defined by 05.013 - FPE

7.4.1.1. Subcritical example

In subcritical mode the refrigerant may be undercooled.
The high pressure set is calculated by the sum of the gas temperature + an offset 04.029 - UCt.

In the event of heat recovery the high pressure set is fixed at a value of 04.017 - UHr.

7.4.1.2. Transcritical example

The high pressure set depends on the gas temperature.
The high pressure set is calculated by the sum of a pressure component plus the saturation pressure at (04.030 - USt + 04.029 - UCt).

The refrigerant pressure is calculated by the formula:

$$\text{Refrigerant temperature}(\textbf{19P} \text{ or } \textbf{20P}) * \frac{(100 \text{ bar} - (\textbf{04.030 - USt} + \textbf{04.029 - UCt}))}{(\textbf{04.012 - UrE} - \textbf{04.030 - USt})} - \textbf{04.030 - USt}.$$

The high pressure set is limited both at the lower (04.010 - USL) and upper values (04.011 - USH).

7.4.1.3. Maximum pressure setpoint increase

The refrigerant temperature can vary frequently in a short time.
The high pressure set varies consequently, and this variation can be limited according to the mode:

- In subcritical mode, the refrigerant pressure must be increased by 0.1 bar for every 04.018 - UiS seconds and decreased by 0.1 bar for every 04.019 - UdS seconds.
- In transcritical mode, the refrigerant pressure must be increased by 0.1 bar for every 04.020 - Uit seconds and decreased by 0.1 bar for every 04.021 - Udt seconds.

7.4.2. HP control

The HP valve regulation is based on a PID with proportional band.
The HP valve opening modulation is activated when at least one high compressor is on and it stops when all compressors are switched off and has a lower limit set by 04.026 - ULP to always ensure a minimum flow of refrigerant (when at least one compressor is active)

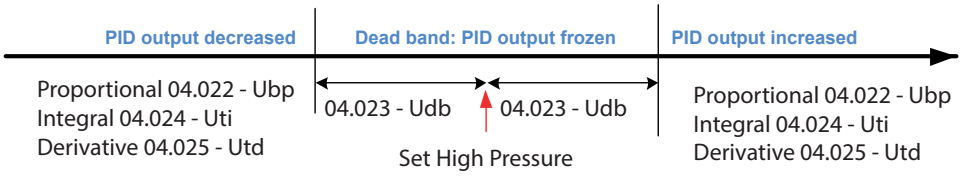

Fig. 77. HP regulation Dead Band

The value modulation is forced to specific values in the following cases, in order of priority:

1. Fixed percentage valve (04.028 – Upr) for inoperable probe.
2. The receiver pressure must be between 08.006 - rLP and 08.007 - rHP.
   With higher pressures the HP valve opening is reduced by 1% per second. If the pressure falls below the minimum value the HP valve opening is increased by 1% per second. Inside the range it modulates from the previous value.

7.4.3. High Pressure parameters | 3-4 High Pressure

LABEL	LABEL	DESCRIPTION	RANGE	DEFAULT	M.U.	LEVEL
7.4.3.1. 3-4 High Pressure						
04.001 - Ut1	**Temperature point 1**	Temperature point 1 segment T/P.	-200.0...800.0	0.0	°C/°F	**3**
04.002 - Ut2	**Temperature point 2**	Temperature point 2 segment T/P.	-200.0...800.0	0.0	°C/°F	**3**
04.003 - Ut3	**Temperature point 3**	Temperature point 3 segment T/P.	-200.0...800.0	0.0	°C/°F	**3**
04.004 - UP1	**Pressure point 1**	Pressure point 1 segment T/P.	-1.0...160.0	0.0	bar/ psi	**3**
04.005 - UP2	**Pressure point 2**	Pressure point 2 segment T/P.	-1.0...160.0	0.0	bar/ psi	**3**
04.006 - UP3	**Pressure point 3**	Pressure point 3 segment T/P.	-1.0...160.0	0.0	bar/ psi	**3**
04.007 - UCS	**Curve selection**	Transcritical linearization curve selection. 0 =Eliwell curve, 1 = custom curve.	0...1	0	num	**3**
04.008 - ULS	**Set min value**	HP set min value	-1...UHS	0.0	bar/ psi	**2**
04.009 - UHS	**Set max value**	HP set max value	ULS...160	100.	bar/ psi	**2**
04.010 - USL	**HP min. set**	HP min set	-1.0...160.0	45.0	bar/ psi	**2**
04.011 - USH	**HP max. set**	HP max set	-1.0...160.0	95.0	bar/ psi	**2**
04.012 - UrE	**Refer.temp.at 100bar**	Reference temperature at 100 bar.	-200.0...800.0	39.0	°C/°F	**2**
04.013 - UoH	**Offset max**	HP offset max	-1.0...160.0	0.0	bar/ psi	**2**
04.014 - UoL	**Offset min**	HP offset min	-1.0...160.0	0.0	bar/ psi	**2**
04.015 - Uot	**Offset time**	HP delay offset activation	0...3600	0	s	**2**
04.016 - UrH	**Receiver hysteresis**	HP receiver differential	0.0...160.0	1.0	bar/ psi	**2**
04.017 - UHr	**Set min during HR**	HP min set during heat recovery at max power	0.0...99.9	80.0	bar/ psi	**2**
04.018 - UiS	**Max set incr. sub.**	HP set max increasing speed in subcritical mode	0.0...99.9	3.0	s	**2**
04.019 - UdS	**Max set decr. sub.**	HP set max decreasing speed in subcritical mode	0.0...99.9	3.0	s	**2**
04.020 - Uit	**Max set incr. trans.**	HP set max increasing speed in transritical mode	0.0...99.9	3.0	s	**2**

LABEL	LABEL	DESCRIPTION	RANGE	DEFAULT	M.U.	LEVEL
04.021 - Udt	**Max set decr. trans.**	HP set max decreasing speed in transcritical mode	0.0...99.9	3.0	s	**2**
04.022 - Ubp	**Proportional band**	HP proportional band	0.0...160.0	10.0	bar/ psi	**2**
04.023 - Udb	**Dead band**	HP dead band	0.0...160.0	0.1	bar/ psi	**2**
04.024 - Uti	**Integral time**	HP regulator integral time	0.0...90.0	2.0	s	**2**
04.025 - Utd	**Derivative time**	HP regulator derivative time	0.0...90.0	0.0	s	**2**
04.026 - ULP	**Min valve open.perc.**	HP min valve opening percentage	0...100	10	%	**2**
04.027 - UHP	**Max valve open. perc.**	HP max valve opening percentage	0...100	85	%	**2**
04.028 - UPr	**Out error perc.**	HP valve % if HP probe error	0...100	0	%	**2**
04.029 - UCt	**Subcool.temp. subcr.**	Subcooling temperature in subcritical mode	-200.0...800.0	6.0	°C/°F	**2**
04.030 - USt	**Subcritical thresh.**	Subcritical mode activation threshold temperature	-200.0...800.0	26.0	°C/°F	**2**
04.031 - Utt	**Transcritical thresh.**	Transcritical mode activation threshold temperature	-200.0...800.0	29.0	°C/°F	**2**
04.032 - Udd	**Deact. delay**	HP valve deactivation delay after HT/PC line compressors disabling	0...60	0	s	**2**
04.033-UEH	**HP high P managem.**	HP valve management 0 = Inactive 1 = HP Valve modulation active if HP pressure is very high	0...1	0	num	**2**
04.034-USC	**HP valve management**	HP valve management selection 0 = AO 1 = RS485	0...1	0	num	**2**
04.035-UAt	**HP valve active. Mode**	HP valve activation mode 0 = Compressors 1 = Compressors or Fans	0...1	0	num	**2**
04.036-USP	**PID out max variat.**	Maximum HP PID variation	0...100	0	%	**2**

7.4.4. HP alarms

7.4.4.1. Probe errors

If both probes configured a gas cooler temperature (19P and backup probe 20P) are in error the fan output is forced to the value defined by 05.013 – FPE.
If the external air temperature probe (18P) is inoperable a warning message appears on the display and the fan output is forced to the value defined by 05.013 – FPE.
In both cases if the value defined by 05.013 – FPE = 0, the plant is shut down.

12.261 - d50	**HP valve synchr.**	**16898**	WORD	-	Valvola HP uscita digitale sincronizzazione (modulo)	0...13	1	num	**3**
		16899	WORD	-	Valvola HP uscita digitale sincronizzazione (numero I/O)	-12...12	-9	num	**3**

7.4.4.2. HP resource allocation

12.234 - d33	**HP valve enable**	HP valve digital output activation (module)	0...13	0	num	**3**
		HP valve digital output activation (I/O number)	-12...12	0	num	**3**
12.261 - d50	**HP valve synchr**	HP valve digital output synchronization (module)	0...13	0	num	**3**
		HP valve digital output synchronization (I/O number)	-12...12	0	num	**3**
12.253 - 03n	**HP valve**	HP valve analogue output (module)	0...13	0	num	**3**
		HP valve analog output (I/O number)	0...6	0	num	**3**

7.4.4.3. HP analogue alarms

11.119 - A121	**HP valve alarm**	HP valve alarm mode	0...2	0	num	**2**
		HP valve alarm priority	0...3	0	num	**2**
11.120 - A122	**HP valve alarm**	HP valve max number of alarms in the window time	5...255	5	min	**2**
		HP valve alarm window time	0...32	0	num	**2**

7.4.4.4. HP alarms table

ID	description	alarm type	Priority	input	bypass	effect
1	**HP valve pressure probe failure**	probe	-	16P	-	backup probe
2	**HP valve backup pressure probe failure**	probe	-	17P	-	AI % or plant shutdown

7.5. Gas Cooler

The Gascooler cools the refrigerant in the system condensation battery.
The optimal regulation controls the fan speed percentage (% GC Fan) to control the probe regulation valve (19P gas cooler output temperature probe).
05.001 - FPC is used to define whether to use the gas cooler output probe or the probe typically positioned near the HP valve (backup gas cooler output temperature probe 20P) which also has a backup function.
The Setgascooler setpoint is a function of the external temperature (external air temperature probe 18P).

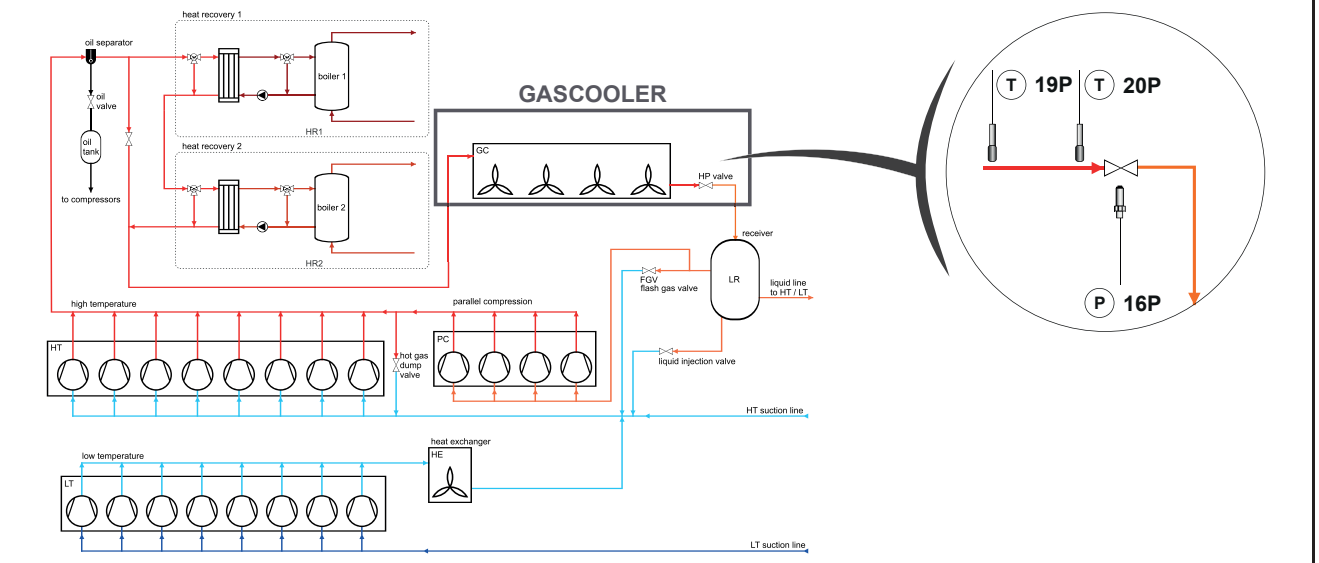

Fig. 78. CO2 Boost System - Gas Cooler

NOTICE

EQUIPMENT ERROR DUE TO LIQUID RETURN

Install a bypass valve to prevent liquid return in the Gascooler when not in use.

Failure to follow these instructions can result in equipment damage.

7.5.1. Gas Cooler I/O allocation

See **CHAPTER 3 "Electrical connections" page 33** for the number and type of analogue outputs used and for information on the symbols used on labels supplied with the controller.

Label	Parameter	Description	Notes
12.032 - 18P	External air temp.	external air temperature probe	-
12.033 - 19P	Gascooler out 1	gas cooler output temperature probe	-
12.034 - 20P	Gascooler out 2	gas cooler backup output temperature probe	backup probe *(1)*
12.235 - d34	Fan 1	digital fan 1	-
12.236 - d35	Fan 2	digital fan 2	-
12.237 - d36	Fan 3	digital fan 3	-
12.238 - d37	Fan 4	digital fan 4	-
12.263 - d52	GC fan act	gascooler digital output fan activation	-
12.254 - 04n	Gascooler fan	gas cooler analogue fan	-
12.116 - i57	One compr. HT on	at least one HT line compressor on	03.001 - HCn > 0

(1) If both probes are in error the percentage output is defined by 05.013 - FPE.

For more information refer to **"CHAPTER 8" "Parameters" page 149**

7.5.1.1. Gascooler setpoint calculation

The setpoint calculation is based on the external temperature and an offset according to the subcritical and transcritical conditions of the system. The set has a lower limit.

Label	Parameter	Description
05.005 - SUt	**Subcritical offset**	subscritical case: set = external air temperature probe (T18) + 05.005 - SUt
05.006 - trt	**Transcritical offset**	transcritical case: set = external air temperature probe (T18) + 05.006 - trt
05.002 - FLS	**Min set**	Gascooler set min value
05.018 - FHr	**Set during HR**	minimum set point during high capacity heat recovery.

Gascooler fan regulation

Enabling
Function of the appropriately configured digital input. If not configured the gascooler is enabled if the power in percentage of the middle temperature compressors is greater than 0%.

Label	Parameter	digital input configured		digital input not configured	
		digital input ON	digital input OFF	HT line compressor power > 0%	HT line compressor power = 0%
12.116 - i57	One compr. HT on	Enabled	Not enabled	-	-
12.116 - i57	One compr. HT on	-	-	Enabled	Not enabled

The gascooler fans are regulated according to a PID with dead band; the PID output is forced at the value reached at the end of the last PID start.

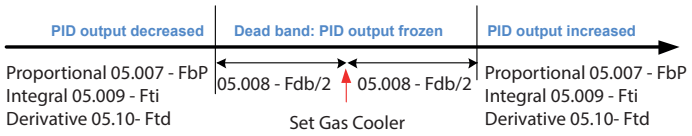

Fig. 79. % Gas Cooler Dead Band

With parameter 05.016 - FPr it is possible to force the gascooler fans to the value 05.017 - FPP on starting.
NOTE. If the value of parameter 05.017 - FPP = 0, the function is disabled.

If 04.035 - UAt = 1 in addition to the conditions defined for 04.035 - UAt = 0 the HP valve is modulated also if the fans become logically active. This allows to start the HP regulation during prefan time, earlier than the activation of compressors.

If the HP Valve is not modulated due to the previous condition the HP valve is also modulated when the pressure (the first probe configured and not in error with the following priority HP Pressure (16P), HP Pressure Backup (17P) , HT Discharge pressure (15P)) is very high (pressure higher than 11.115 - A117). If valve modulation is active due to this condition, it will be deactivated when the pressure become lower than 11.116 - A118.
This function is enabled when 04.033 - UEH = 1.

The Gascooler can dissipate a large amount of heat, for this reason the fans must be switched off with a delay compared to the middle compressors. During this phase the fan percentage is frozen.
NOTE. If the value of parameter 05.015 - FdC = 0, the function is disabled.

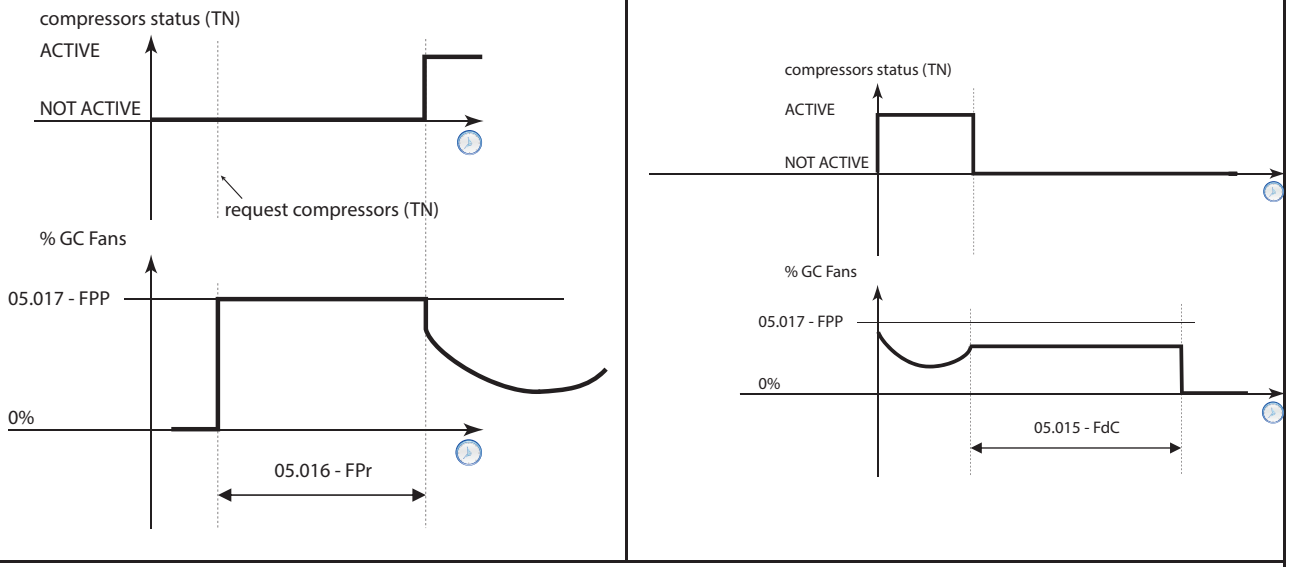

Fig. 80. % Gas Cooler regulation

In the transcritical phase the Gascooler fans are always on at the maximum percentage.
The gas cooler output regulator (%GC Fan) typically pilots

- an analogue output set by the parameter **12.254 - 04n** or
- up to maximum 4 digital fans, see following table and diagram:

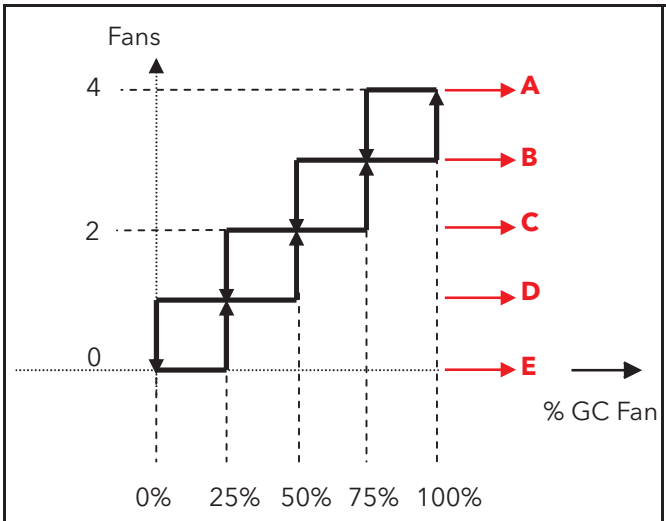

Par.	**12.235 - d34**	**12.236 - d35**	**12.237 - d36**	**12.238 - d37**
fans	FAN1	FAN2	FAN3	FAN4
A	**ON**	**ON**	**ON**	**ON**
B	**ON**	**ON**	**ON**	OFF
C	**ON**	**ON**	OFF	OFF
D	**ON**	OFF	OFF	OFF
E	OFF	OFF	OFF	OFF

Fig. 81. % Gas Cooler digital fans

Note. The analogue output and digital outputs can be configured at the same time.

Gascooler fan noise (Anti Noise)

The gascooler fans may be noisy and could disturb people both during the day and at night. The following parameters are available for limiting the maximum fan speed to prevent this disturbance (Anti Noise function) via an appropriately configured digital input.

Label	Parameter	Description
12.166 - i107	**Anti noise**	Anti-Noise digital input
05.011 - HPd	**PID max perc. day**	% maximum fan speed during working hours i.e. daytime (Day)
05.012 - HPn	**PID max perc.night**	% maximum fan speed during the night (Night)

7.5.2. Parameters | 3-5 Gas Cooler

LABEL	LABEL	DESCRIPTION	RANGE	DEFAULT	M.U.	LEVEL
3-5-1 Regulation						
05.001 - FPC	**Probe selection**	Gascooler probe selection 0=Gascooler regulation (19P) / HP set point computation (19P), 1=Gascooler regulation (20P) / HP set point computation (20P), 2=Gascooler regulation (19P) / HP set point computation (20P), 3=Gascooler regulation (20P) / HP set point computation (19P)	0...3	0	num	**3**
05.002 - FLS	**Min set**	Gascooler set min value	-200.0...800.0	8.0	°C/°F	**2**
05.005 - SUt	**Offset subcritical**	External temperature offset for gascooler in subcritical mode	-200.0...800.0	-0.5	°C/°F	**2**
05.006 - trt	**Offset transcritical**	External temperature offset for gascooler in transcritical mode	-200.0...800.0	-2.0	°C/°F	**2**
05.007 - FbP	**Proportional band**	Gascooler proportional band	0.0.0...800.0.0	5.0	°C/°F	**2**
05.008 - Fdb	**Dead band**	Gascooler dead band	0.0.0...800.0.0	0.0	°C/°F	**2**
05.009 - Fti	**Integral time**	Fans PID integral time	0.0...90.0	20.0	s	**2**
05.010 - Ftd	**Derivative time**	Fans PID derivative time	0.0...90.0	0.0	s	**2**
05.011 - HPd	**PID max perc. day**	Fans PID out max percentage day	0...100	100	%	**2**
05.012 - HPn	**PID max perc. night**	Fans PID out max percentage night	0...100	100	%	**2**
05.013 - FPE	**Out error perc.**	Fans output percentage in case of probe error	0...100	50	%	**2**
05.014 - FLP	**Min out perc.**	Fans output minimum percentage	0...100	0	%	**2**
05.015 - FdC	**Post fan time**	Gascooler fans shutdown delay after compressor disabling	0...999	1	min	**2**
05.016 - FPr	**Pre fan time**	Gascooler pre-fan time.	0...360	0	s	**2**
05.017 - FPP	**Pre fan perc.**	Gascooler pre-fan %.	0...100	50	%	**2**
05.018 - FHr	**Set during HR**	Gascooler set during heat recovery	-200.0...800.0	5.0	°C/°F	**2**
05.019 - FSP	**PID max variation**	Gascooler PID regulator max percentage change	0...100	10	%	**2**

7.5.3. Gascooler alarms

7.5.3.1. Gascooler probe errors

If both probes configured as cooler temperature (19P and 20P backup probe) fail to output
Fans is forced to the value defined by 05.013 - FPE.
If the outdoor air temperature probe (18P) is defective, a warning message appears on the display and output
Fans is forced to the value defined by 05.013 - FPE.
In both cases, if the value defined by 05.013 - FPE is equal to 0, the system is blocked.

7.5.3.2. Gascooler alarm resource allocation

3-12-3-5 Gas Cooler						
12.160 - i101	**Gascooler alarm**	Gascooler digital input alarm (module)	0...13	0	num	**3**
		Gascooler digital input alarm (I/O number)	-24...24	0	num	**3**
12.161 - i102	**Gascooler inv. alarm**	Gascooler digital input inverter alarm (module)	0...13	0	num	**3**
		Gascooler digital input inverter alarm (I/O number)	-24...24	0	num	**3**
12.162 - i103	**Gascooler fan 1**	Gascooler fan 1 digital input alarm (module)	0...13	0	num	**3**
		Gascooler fan 1 digital input alarm (I/O number)	-24...24	0	num	**3**
12.163 - i104	**Gascooler fan 2**	Gascooler fan 2 digital input alarm (module)	0...13	0	num	**3**
		Gascooler fan 2 digital input alarm (I/O number)	-24...24	0	num	**3**
12.164 - i105	**Gascooler fan 3**	Gascooler fan 3 digital input alarm (module)	0...13	0	num	**3**
		Gascooler fan 3 digital input alarm (I/O number)	-24...24	0	num	**3**
12.165 - i106	**Gascooler fan 4**	Gascooler fan 4 digital input alarm (module)	0...13	0	num	**3**
		Gascooler fan 4 digital input alarm (I/O number)	-24...24	0	num	**3**
12.166 - i107	**Anti noise**	Anti noise digital input (module)	0...13	0	num	**3**
		Anti noise digital input (I/O number)	-24...24	0	num	**3**

7.5.3.3. Configuration of Gascooler digital and analogue alarms

3-11-5 Gas Cooler						
11.122 - A124	**Gascooler high press**	Gascooler alarm mode high pressure	0...3	0	num	**2**
		Gascooler alarm priority high pressure	0...2	0	num	**2**
11.123 - A125	**Gascooler high press**	Gascooler max pressure alarm	-1.0...160.0	0	bar/ psi	**2**
11.124 - A126	**High press. diff.**	Gascooler high pressure alarm differential	0.0...160.0	0	bar/psi	**2**
11.125 - A127	**Gascooler out high t.**	Gascooler alarm mode high temperature	0...2	0	num	**2**
		Gascooler alarm priority high temperature	0...3	0	num	**2**
11.126 - A128	**Gascooler out low t.**	Gascooler alarm mode low temperature	0...2	0	num	**2**
		Gascooler alarm priority low temperature	0...3	0	num	**2**
11.127 - A129	**Gascooler out high t.**	Gascooler out high temperature alarm threshold	-200.0...800.0	36.0	°C/°F	**2**
11.128 - A130	**Gascooler out low t.**	Gascooler out low temperature alarm threshold	-200.0...800.0	0	°C/°F	**2**
11.129 - A131	**Temp. alarm diff.**	Gascooler temperature alarm differential	0.1...800.0	1.0	°C/°F	**2**
11.130 - A132	**Gascooler fan 1**	Gascooler fan 1 alarm type	0...2	0	num	**2**
		Gascooler fan 1 alarm priority	0...3	0	num	**2**
11.131 - A133	**Gascooler fan 2**	Gascooler fan 2 alarm type	0...2	0	num	**2**
		Gascooler fan 2 alarm priority	0...3	0	num	**2**

11.132 - A134	**Gascooler fan 3**	Gascooler fan 3 alarm type	0...2	0	num	**2**
		Gascooler fan 3 alarm priority	0...3	0	num	**2**
11.133 - A135	**Gascooler fan 4**	Gascooler fan 4 alarm type	0...2	0	num	**2**
		Gascooler fan 4 alarm priority	0...3	0	num	**2**
11.134 - A136	**Gascooler fan**	Gascooler fan max number of alarms in the window time	5...255	5	min	**2**
		Gascooler fan alarm window time	0...32	0	min	**2**
11.135 - A137	**Gascooler alarm**	Gascooler alarm mode	0...2	0	num	**2**
		Gascooler alarm priority	0...3	0	num	**2**
11.136 - A138	**Gascooler alarm**	Gascooler max number of alarms in the window time	5...255	5	min	**2**
		Gascooler alarm window time	0...32	0	num	**2**
11.137 - A139	**Gascooler inverter**	Gascooler inverter alarm mode	0...2	0	num	**2**
		Gascooler inverter alarm priority	0...3	0	num	**2**
11.138 - A140	**Gascooler inverter**	Gascooler inverter fan max number of alarms in the window time	5...255	5	min	**2**
		Gascooler inverter fan alarm window time	0...32	0	num	**2**

7.5.3.4. Gascooler Alarms Table

alarm number	description	type	bypass	resource	effect
60	Gascooler high pressure	input	-	16P	plant shutdown
61	Gascooler out high temperature	input	-	19P / 20P	plant shutdown
62	Gascooler out low temperature	input	-	19P / 20P	plant shutdown
63	Gascooler fan 1	digital	-	i103	resource blocked
64	Gascooler fan 2	digital	-	i104	resource blocked
65	Gascooler fan 3	digital	-	i105	resource blocked
66	Gascooler fan 4	digital	-	i106	resource blocked
67	Gascooler failure	digital	-	i101	plant shutdown
68	Gascooler inverter failure	digital	-	i102	plant shutdown

7.6. Heat Recovery

Heat Recovery is obtained with one or two heat exchangers HR1 and HR2 (for domestic water and underfloor heating).

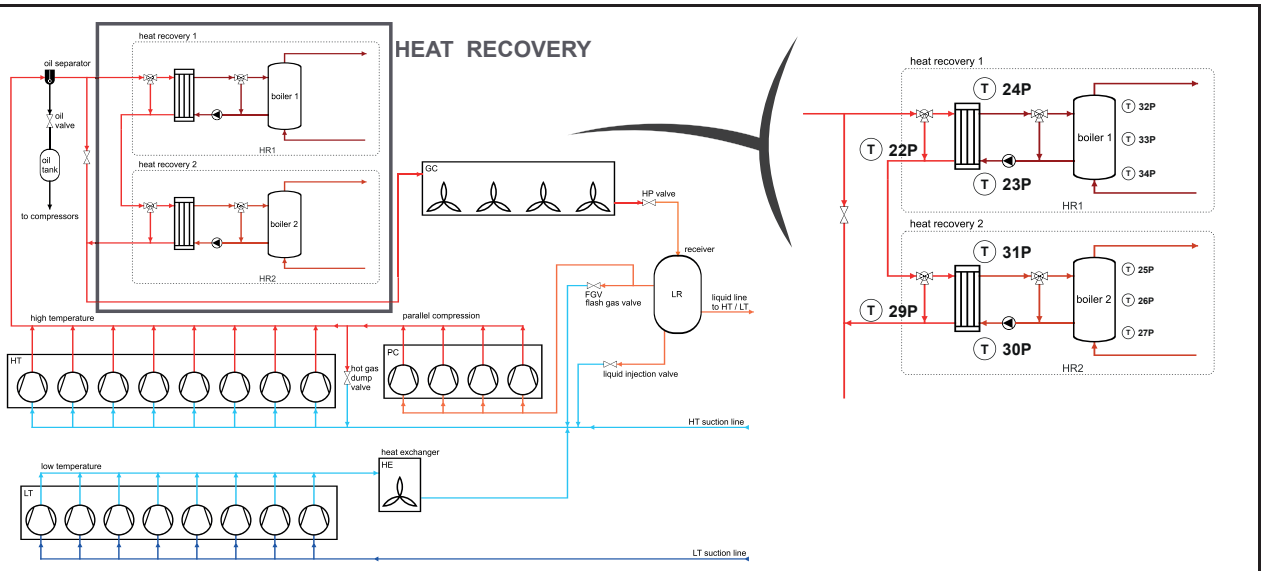

Fig. 82. CO2 Boost System - Heat recovery

7.6.1. Heat recovery I/O allocation

Refer to CHAPTER 3 “Electrical connections” page 33 for the number and type of inputs/outputs and for information on the symbols used on labels supplied with the device.

7.6.1.1. Heat recovery resource allocation

Label	Parameter HR1	Label	Parameter HR2	Description
12.035 - 21P	HR1 CO2 inlet temp.	**12.042 - 28P**	HR2 CO2 inlet temp.	CO2 inlet temperature probe
12.036 - 22P	HR1 CO2 outlet temp.	**12.043 - 29P**	HR2 CO2 outlet temp.	CO2 outlet temperature probe
12.037 - 23P	HR1 H2O inlet temp.	**12.044 - 30P**	HR2 H2O inlet temp.	exchanger inlet water temperature probe
12.038 - 24P	HR1 H2O outlet temp.	**12.045 - 31P**	HR2 H2O outlet temp.	exchanger outlet water temperature probe
12.039 - 25P	HR1 boil. top. temp.	**12.046 - 32P**	HR2 boil. top. temp.	boiler temperature probe top
12.040 - 26P	HR1 boil. mid. temp.	**12.047 - 33P**	HR2 boil. mid. temp.	boiler temperature probe middle
12.041 - 27P	HR1 boil.bott. temp.	**12.048 - 34P**	HR2 boil.bott. temp.	boiler temperature probe bottom

3-12-3-6 Heat Recovery						
12.167 - i108	**HR1 activation**	Heat recovery 1 digital input activation (module)	0...13	0	num	**3**
		Heat recovery 1 digital input activation (I/O number)	-24...24	0	num	**3**
12.168 - i109	**HR1 alarm**	Heat recovery 1 digital input alarm (module)	0...13	0	num	**3**
		Heat recovery 1 digital input alarm (I/O number)	-24...24	0	num	**3**
12.169 - i110	**HR2 activation**	Heat recovery 2 digital input activation (module)	0...13	0	num	**3**
		Heat recovery 2 digital input activation (I/O number)	-24...24	0	num	**3**
12.170 - i111	**HR2 alarm**	Heat recovery 2 digital input alarm (module)	0...13	0	num	**3**
		Heat recovery 2 digital input alarm (I/O number)	-24...24	0	num	**3**

12.239 - d38	**HR1 Belimo**	Heat recovery 1 digital output bypass valve (module)	0...13	0	num	**3**
		Heat recovery 1 digital output bypass valve (I/O number)	-12...12	0	num	**3**
12.240 - d39	**HR1 water pump**	Heat recovery 1 digital output H2O pump (module)	0...13	0	num	**3**
		Heat recovery 1 digital output H2O pump digital output (I/O number)	-12...12	0	num	**3**
12.241 - d40	**HR2 Belimo**	Heat recovery 2 digital output bypass valve (module)	0...13	0	num	**3**
		Heat recovery 2 digital output bypass valve (I/O number)	-12...12	0	num	**3**
12.242 - d41	**HR2 water pump**	Heat recovery 2 digital output H2O pump (module)	0...13	0	num	**3**
		Heat recovery 2 digital output H2O pump digital output (I/O number)	-12...12	0	num	**3**

12.255 - 05n	**HR 1 valve**	Heat recovery 1 analog output valve (module)	0...13	0	num	**3**
		Heat recovery 1 analog output valve (I/O number)	0...6	0	num	**3**
12.256 - 06n	**HR 2 valve**	Heat recovery 2 analog output valve (module)	0...13	0	num	**3**
		Heat recovery 2 analog output valve (I/O number)	0...6	0	num	**3**

7.6.1.2. For more information refer to **“CHAPTER 8” “Parameters” page 149**

7.6.2. Heat Recovery enabling

The enabling of this device is set with parameters 06.001 - r1tY for the exchanger 1 (HR1) and 07.001 - r2tY for the exchanger 2 (HR2).
It is possible to use a 06.001 - r1tY = 1, 07.001 - r2tY = 1, or two probes 06.001 - r1tY = 2, 07.001 - r2tY = 2.
The two exchangers are independent and the regulation is similar for each exchanger.

Heat recovery is enabled:

- from digital input i108 (HR1) and i110 (HR2). If the input is not configured this condition is omitted.
- no alarm condition;
- according to the water temperature and dependent on the boiler probe configuration. The boiler can be equipped with one, two or three appropriately positioned probes:
  12.039 - 25P, 12.040 - 26P, 12.041 - 27P, Boiler temperature probes for hot water
  12.046 - 32P, 12.040 - 33P, 12.041 - 34P, Boiler temperature probes for underfloor heating.
  The probe considered for start-up is selected via the parameters 06.002 - r1P1 / 07.002 - r2P1.
  The probe considered for stopping is selected via the parameters 06.003 - r1P2 / 07.002 - r2P2.

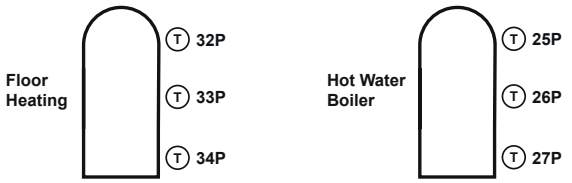

Fig. 83. Heat recovery - positioning the boiler probes

7.6.2.1. Regulation

The heat recovery is activated when the hot water temperature is below a given threshold 06.008 - r1SH.
It is deactivated when the water temperature exceeds 06.007 - r1HF.

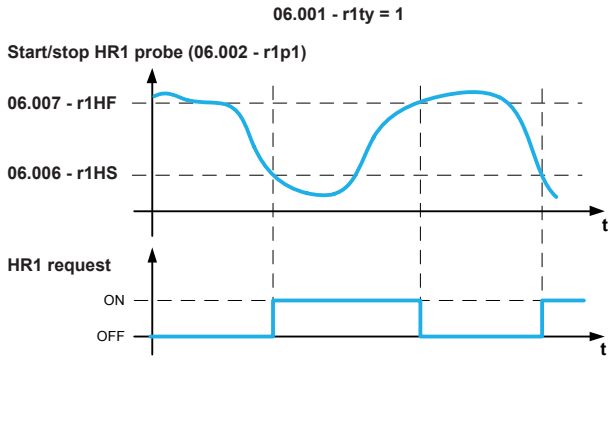

Fig. 84. Heat Recovery regulation 1 probe

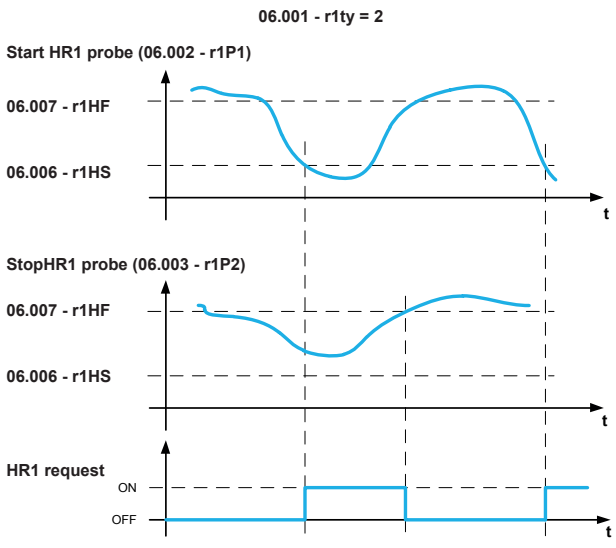

Fig. 85. Heat Recovery regulation 2 probes

The gas flows in the heat exchanger cooled by the water, via a three-way bypass valve (output configured by parameter **12.239 - d38, 12.241 - d40** for HR1 and HR2 respectively**)**.

The output temperature from the exchanger **12.036 - 22P** must be kept above the gas cooler regulation point (the setpoint is dynamic according to the external air temperature and the gas flow) to ensure the correct operation of the gas cooler.

In the water side of the heat exchanger, a water pump + three-way mixer valve system (for the exchanger HR1 digital output **12.240 - d39, analogue output 12.255 - 05n;** for the exchanger HR2 digital output **12.242 - d41, analogue output 12.256 - 06n)** is managed to keep the water temperature **12.038 - 24P, 12.045 - 31P** (HR1, HR2 respectively) above a setpoint defined by **12.038 - 24P / 12.045 - 31P.**

When the heat recovery is activated, it is possible to increase the amount of heat by moving the high pressure reference 04.017 - UHr when the water temperature is below the threshold 06.008 - r1SH.
The “high capacity” regulation is active when the start probe records a value below 06.008 - r1SH / 07.008 - r2SH, and is disabled if the value read exceeds 06.008 - r1SH + 06.009 - r1dH / 07.008 - r2SH + 07.009 - r2dH.

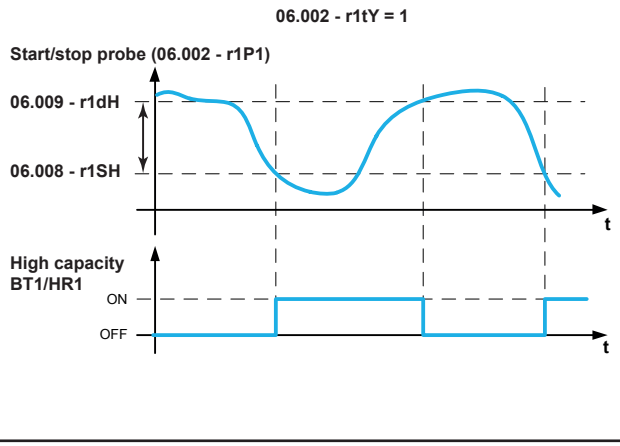

Fig. 86. Heat Recovery regulation 1 probe high capacity mode

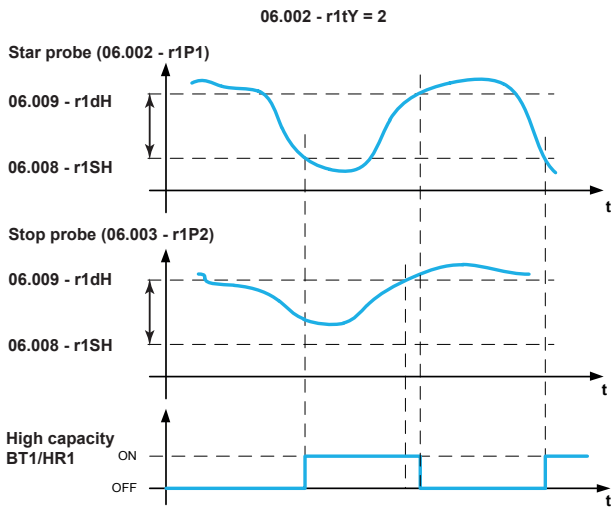

Fig. 87. Heat Recovery regulation 2 probes high capacity mode

After reaching the required amount of water, the heat recovery is disabled.
The percentage of three-way bypass valve regulation is determined by a PID with dead band; the system consisting of ‘water pump + three-way mixer valve’ reduces its capacity to 0%, to be sure that the exchanger is completely cooled.

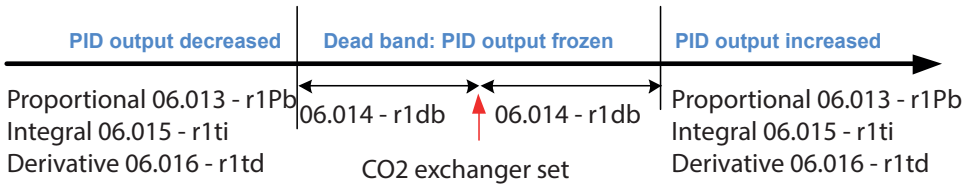

Fig. 88. 3 way bypass valve regulation PID Dead Band

For the exchanger HR2 the PID set is calculated using the formula:

CO2 exchanger output set (HR2) = gascooler set + 06.010 - r1dL

For the HR1 phase the value depends on the activation of the HR2 phase.
If the exchanger HR2 is not active the setpoint is calculated as described above, i.e.
For exchanger HR1 the PID set is calculated with the formula:

CO2 exchanger output set (HR1) = gascooler set + 06.010 - r1dL

If the exchanger HR2 is active the refrigerant temperature must be maintained at a higher value to allow the exchange of heat on the HR second stage, so that the reference value is calculated by the formula:

CO2 exchanger output set (HR1) = minimum CO2 temperature + 06.010 - r1dL

where the minimum CO2 temperature is the maximum value between:
- gascooler set,
- **12.042 - 28P H**R2 CO2 inlet temp.,
- **07.007 - r2HF.**

7.6.3. Heat recovery parameters | 3.6 - 3.7 Heat Recovery

LABEL	LABEL	DESCRIPTION	RANGE	DEFAULT	M.U.	LEVEL
3-6 Heat Recovery 1						
06.001 - r1tY	**Regulation mode**	Heat recovery 1 mode • 0 = HR1 disabled • 1 = one probe • 2 = two probes	0...2	0	num	**3**
06.002 - r1P1	**Boiler probe 1**	Heat recovery 1 boiler probe 1 • 0 = disabled • 1 = top • 2 = middle • 3 = bottom	0...3	1	num	**3**
06.003 - r1P2	**Boiler probe 2**	Heat recovery 1 boiler probe 2 See **06.002 - r1P1**	0...3	3	num	**3**
06.004 - r1CS	**CO2 inlet start temp**	Heat recovery 1 inlet CO2 activation temperature	-200.0...800.0	0.0	°C/°F	**2**
06.005 - r1CF	**CO2 inlet stop temp**	Heat recovery 1 inlet CO2 deactivation temperature	-200.0...800.0	0	°C/°F	**2**
06.006 - r1HS	**H2O start temp**	Heat recovery 1 boiler activation water temperature	-200.0...800.0	50.0	°C/°F	**2**
06.007 - r1HF	**H2O stop temp**	Heat recovery 1 boiler deactivation water temperature	-200.0...800.0	70.0	°C/°F	**2**
06.008 - r1SH	**H2O temp set max pow**	Heat recovery 1 boiler water temperature to activate max power	-200.0...800.0	24.0	°C/°F	**2**
06.009 - r1dH	**H2O temp dif max pow**	Heat recovery 1 boiler water differential temperature to activate max power	0.0...800.0	1.0	°C/°F	**2**
06.010 - r1dL	**H2O min delta temp**	Heat recovery 1 exchanger min differential water temperature	0.0...800.0	0.0	°C/°F	**2**
06.011 - r1SL	**H2O inlet min temp**	Heat recovery 1 inlet mixing valve min water temperature	-200.0...800.0	0.0	°C/°F	**2**
06.012 - r1HL	**H2O in/out min diff**	Heat recovery 1 min inlet/outlet water temperature differential	0.0...800.0	0.0	°C/°F	**2**
06.013- r1Pb	**Proportional band**	Heat recovery 1 proportional band	0.0...800.0	0.5	°C/°F	**2**
06.014 - r1db	**Dead band**	Heat recovery 1 dead band	0.0...800.0	0.0	°C/°F	**2**
06.015 - r1ti	**Integral time**	Heat recovery 1 integral time	0.0...900.0	0.0	s	**2**
06.016 - r1td	**Derivative time**	Heat recovery 1 derivative time	0.0...90.0	0.0	s	**2**
06.017 - r1Ld	**Min temp. wait. time**	Heat recovery 1 exchanger waiting time min water temperature differential	0...999	0	s	**2**
06.018 - r1ot	**On/off time**	Heat recovery 1 exchanger activation/deactivation time	0...999	300	s	**2**
06.019 - r1SP	**PID max variation**	Heat recovery 1 PID max variation	0...100	1	%	**2**

LABEL	LABEL	DESCRIPTION	RANGE	DEFAULT	M.U.	LEVEL
06.020 - r1LP	**Min out perc.**	Heat recovery 1 min %	0...100	0	%	**2**
06.021 - r1HP	**Max out perc.**	Heat recovery 1 max %	0...100	100	%	**2**
06.022 - r1Lt	**Min difference time**	Heat recovery 1 inlet/outlet water temperature difference min duration	0...999	0	s	**2**
06.023 - r1rC	**Reverse valve contr.**	Heat recovery 1 reverse valve control 0= direct mode, 0% to 100% 1= inverse mode, 100% to 0%.	0...1	0	flag	**2**

3-7 Heat Recovery 2

07.001 - r2tY	**Regulation mode**	Heat recovery 2 mode • 0 = HR2 disabled • 1 = one probe • 2 = two probes	0...2	0	num	**3**
07.002 - r2P1	**Boiler probe 1**	Heat recovery 2 boiler probe 1 • 0 = disabled • 1 = top • 2 = middle • 3 = bottom	0...3	1	num	**3**
07.003 - r2P2	**Boiler probe 2**	Heat recovery 2 boiler probe 2 See **06.002 - r1P1**	0...3	3	num	**3**
07.004 - r2CS	**CO2 inlet start temp**	Heat recovery 2 inlet CO2 activation temperature	-200.0...800.0	0.0	°C/°F	**2**
07.005 - r2CF	**CO2 inlet stop temp**	Heat recovery 2 inlet CO2 deactivation temperature	-200.0...800.0	0.0	°C/°F	**2**
07.006 - r2HS	**H2O start temp**	Heat recovery 2 boiler activation water temperature	-200.0...800.0	0.0	°C/°F	**2**
07.007 - r2HF	**H2O stop temp**	Heat recovery 2 boiler deactivation water temperature	-200.0...800.0	0.0	°C/°F	**2**
07.008 - r2SH	**H2O temp set max pow**	Heat recovery 2 boiler water temperature to activate max power	-200.0...800.0	0.0	°C/°F	**2**
07.009 - r2dH	**H2O temp dif max pow**	Heat recovery 2 boiler water differential temperature to activate max power	0.0...800.0	0.0	°C/°F	**2**
07.010 - r2dL	**H2O min delta temp**	Heat recovery 2 exchanger min differential water temperature	0.0...800.0	0.0	°C/°F	**2**
07.011 - r2SL	**H2O inlet min temp**	Heat recovery 2 inlet mixing valve min water temperature	-200.0...800.0	0.0	°C/°F	**2**
07.012 - r2HL	**H2O in/out min diff**	Heat recovery 2 min difference between outlet and inlet water temperature	0.0...800.0	0.0	°C/°F	**2**
07.013 - r2Pb	**Proportional band**	Heat recovery 2 proportional band	0.0...800.0	0.0	°C/°F	**2**
07.014 - r2db	**Dead band**	Heat recovery 2 dead band	0.0...800.0	0.0	°C/°F	**2**
07.015 - r2ti	**Integral time**	Heat recovery 2 integral time	0.0...900.0	0.0	s	**2**

07.016 - r2td	**Derivative time**	Heat recovery 2 derivative time	0.0...90.0	0.0	s	**2**
07.017 - r2Ld	**Min temp. wait. time**	Heat recovery 2 exchanger waiting time min diff. temp. water side	0...999	0	s	**2**
07.018 - r2ot	**On/off time**	Heat recovery 2 exchanger activation/deactivation time	0...999	0	s	**2**
07.019 - r2SP	**PID max variation**	Heat recovery 2 PID max variation	0...100	0	%	**2**
07.020 - r2LP	**Min out perc.**	Heat recovery 2 min %	0...100	0	%	**2**
07.021 - r2HP	**Max out perc.**	Heat recovery 2 max %	0...100	0	%	**2**
07.022 - r2Lt	**Min difference time**	Heat recovery 2 duration of min difference	0...999	0	s	**2**
07.023 - r2rC	**Reverse valve contr.**	Heat recovery 2 reverse valve control 0= direct mode, 0% to 100% 1= inverse mode, 100% to 0%.	0...1	0	flag	**2**

7.6.3.1. Heat Recovery alarms

7.6.3.2. Heat recovery analogue alarms

When the difference between the discharge and return water temperature on the heat exchanger is less than the threshold 06.012 - r1HL (for HR1) or 07.012 - r2HL (for HR2) for more than 06.017 - r1Ld seconds (for HR1) or 07.017 - r2Ld (for HR2), an alarm is triggered.

7.6.3.3. Heat recovery alarm configuration

3-11-6 Heat Recovery						
11.139 - A141	**HR1 alarm**	Heat recovery 1 alarm type	0...3	0	num	**2**
		Heat recovery 1 alarm priority	0...2	0	num	**2**
11.140 - A142	**HR1 alarm**	Heat recovery 1 max number of alarm	5...255	0	num	**2**
		Heat recovery 1 window time	0...32	0	num	**2**
11.141 - A143	**HR1 min. diff. alarm**	Heat recovery 1 min difference alarm type	0...3	0	num	**2**
		Heat recovery 1 min difference alarm priority	0...2	0	num	**2**
11.142 - A144	**HR2 alarm**	Heat recovery 2 alarm type	0...3	0	num	**2**
		Heat recovery 2 alarm priority	0...2	0	num	**2**
11.143 - A145	**HR2 alarm**	Heat recovery 2 max number of alarm	5...255	5	min	**2**
		Heat recovery 2 window time	0...32	0	num	**2**
11.144 - A146	**HR2 min. diff. alarm**	Heat recovery 2 min difference alarm type	0...2	0	num	**2**
		Heat recovery 2 min difference alarm priority	0...3	0	num	**2**

7.6.3.4. Heat recovery alarms table

ID	description	alarm type	Priority	input	bypass	effect
20	**Heat recovery 1 bottom boiler temperature probe failure**	probe	-	27P	-	backup probe or HR1 block
21	**Heat recovery 1 middle boiler temperature probe failure**	probe	-	26P	-	backup probe or HR1 block
22	**Heat recovery 1 top boiler temperature probe failure**	probe	-	25P	-	backup probe or HR1 block
23	**Heat recovery 1 CO2 inlet temperature probe failure**	probe	-	21P	-	HR1 block
24	**Heat recovery 1 CO2 outlet temperature probe failure**	probe	-	22P	-	HR1 block
25	**Heat recovery 1 H2O inlet temperature probe failure**	probe	-	23P	-	HR1 block
26	**Heat recovery 1 H2O outlet temperature probe failure**	probe	-	24P	-	HR1 block
27	**Heat recovery 2 bottom boiler temperature probe failure**	probe	-	34P	-	backup probe or HR2 block
28	**Heat recovery 2 middle boiler temperature probe failure**	probe	-	33P	-	backup probe or HR2 block
29	**Heat recovery 2 top boiler temperature probe failure**	probe	-	32P	-	backup probe or HR2 block
30	**Heat recovery 2 CO2 inlet temperature probe failure**	probe	-	28P	-	HR2 block
31	**Heat recovery 2 CO2 outlet temperature probe failure**	probe	-	29P	-	HR2 block
32	**Heat recovery 2 H2O inlet temperature probe failure**	probe	-	30P	-	HR2 block
33	**Heat recovery 2 H2O outlet temperature probe failure**	probe	-	31P	-	HR2 block
299	**Heat recovery 1 inlet/outlet temperature difference too low alarm**	input	-	24P	X	resource blocked

7.7. Liquid Receiver (LR)

7.7.1. Flash Gas Valve (FGV)

The CO2 liquid receiver receives a mix of gas-liquid from the HP valve. The gas is removed by the Flash Gas Valve (Fkash Gas Valve, FGV).

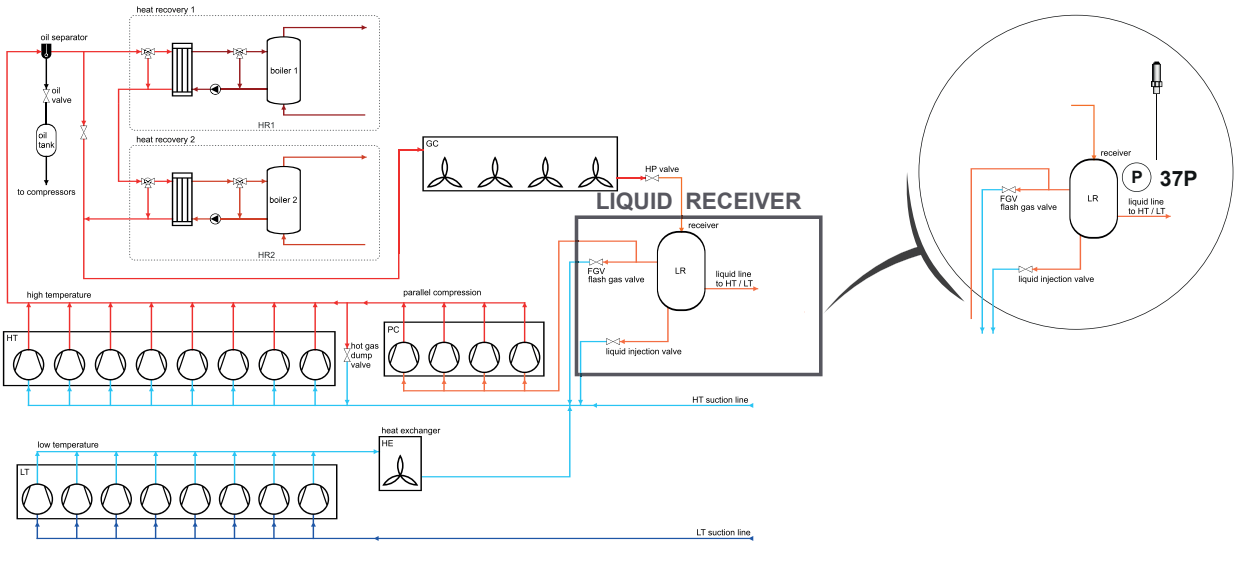

Fig. 89. CO2 Boost System - Flash Gas Valve

7.7.2. Liquid receiver resource allocation

Resource Allocation	Label	Parameter	Type	Description
Digital	**12.171 - i112**	**Receiv.MP valve fail**	di	-
	12.262 - d51	**FG valve synchr.**	di	Flash gas valve digital output synchronization
Analog	**12.258 - 08n**	**Receiver MP valve**	AO	-
	12.053 - 37P	**HP receiver press.**	AI	Receiver pressure probe
	12.054 - 37L	**HP receiver P 4mA**		Receiver pressure analogue input lower limit
	12.055 - 37H	**HP receiver P 20mA**		Receiver pressure analogue input upper limit

7.7.3. Flash Gas Valve (FGV) regulation

The regulation maintains the CO2 pressure (**12.053 - 37P:** HP Receiver Pressure) below a given threshold.
The regulation is based on a PID with proportional band; when the plant is running the regulation is always on with the exception of the stand-by status or if there is an alarm. In the event of pressure transducer malfunction, the valve is forced open by the value 08.003 - rPr.

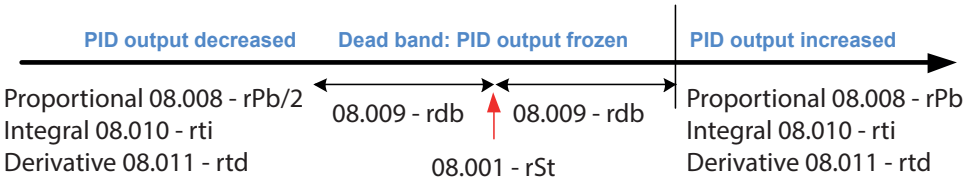

Fig. 90. FGV PID regulation in Dead Band

7.7.4. Flash Gas Valve parameters | 3-8-1 Flash Gas Valve

3-8-1 Flash Gas Valve						
08.001 - rSt	**Set**	Receiver regulation set	-1.0...160.0	35.0	bar	**2**
08.002 - rHS	**PID max variation**	Receiver PID out max variation	0...100	5	%	**2**
08.003 - rPr	**Out error perc.**	Receiver % power when suction probe is in error	0...100	0	%	**2**
08.004 - rPL	**Min valve open. perc.**	Receiver opening valve min %	0...100	0	%	**2**
08.005 - rPH	**Max valve open. perc.**	Receiver opening valve max %	0...100	100	%	**2**
08.006 - rLP	**Receiver min press.**	Receiver min pressure to force HP press valve opening	-1.0...160.0	30.0	bar	**2**
08.007 - rHP	**Receiver max press.**	Receiver max pressure to force HP press valve opening	-1...800	38.0	bar	**2**
08.008 - rPb	**Proportional band**	Receiver proportional band	0.0...160.0	8.0	bar	**2**
08.009 - rdb	**Dead band**	Receiver dead band	0.0...160.0	0.1	bar	**2**
08.010 - rti	**Integral time**	Receiver PID integral time	0...90	40	s	**2**
08.011 - rtd	**Derivative time**	Receiver PID derivative time	0...90	0	s	**2**

7.7.5. Liquid receiver alarms

7.7.5.1. LR analogue and digital alarms

11.145 - A147	**Receiver low press.**	Receiver low pressure alarm mode	0...2	0	num	**2**
		Receiver low pressure alarm priority	0...3	0	num	**2**
11.146 - A148	**Receiver high press.**	Receiver high pressure alarm mode	0...2	0	num	**2**
		Receiver high pressure alarm priority	0...3	0	num	**2**
11.147 - A149	**Receiver valve fail**	Receiver valve alarm mode	0...2	0	num	**2**
		Receiver valve alarm priority	0...3	0	num	**2**
11.148 - A150	**Receiver valve fail**	Receiver valve max number of alarms in the window time	5...255	5	min	**2**
		Receiver valve alarm window time	0...32	0	num	**2**
11.149 - A151	**ST comp.therm. switch**	PC line alarm mode compressor thermal switch	0...3	0	num	**2**
		PC line alarm priority compressor thermal switch	0...2	0	num	**2**

11.171 - A171	**Receiver high press.**	Receiver high pressure alarm threshold	-1.0...160.0	42.0	bar/ psi	**2**
11.172 - A172	**Receiver low press.**	Receiver low pressure alarm threshold	-1.0...160.0	30.0	bar/ psi	**2**
11.173 - A173	**Rec. alarm diff.**	Receiver alarm differential	1.0...160.0	5.0	bar/ psi	**2**

7.7.6. Parallel compression (PC)

Regulation managing a stage of compressors receiving the gas by suction from the liquid receiver and sending it to the HT line compressor discharge line.

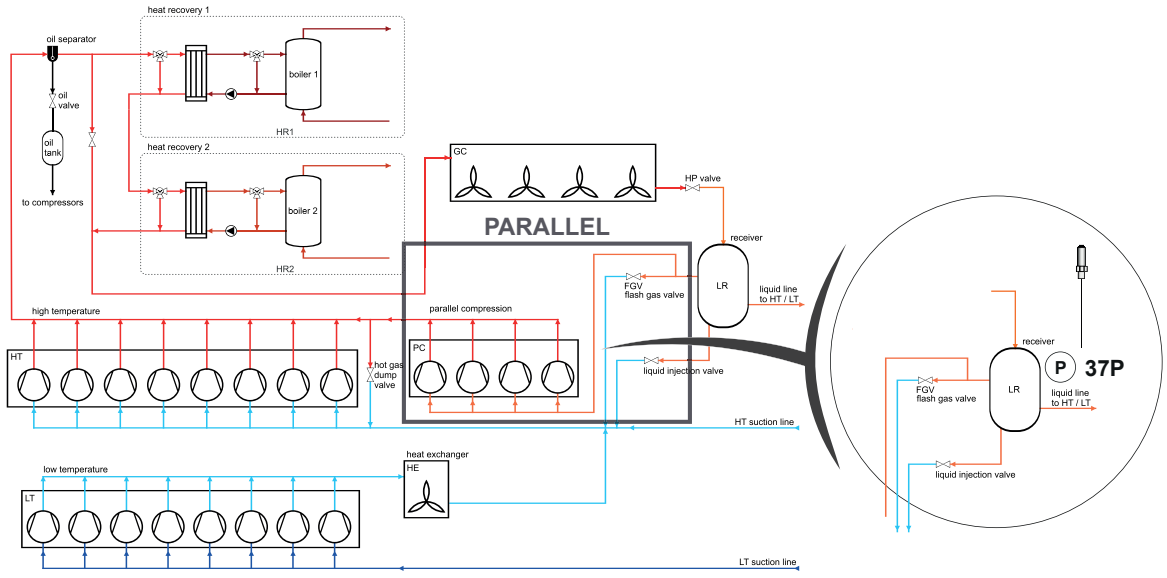

Fig. 91. CO2 Boost System - Flash Gas Valve

7.7.7. Parallel compression resource allocation

resource allocation	label	parameter	type	description
Digital	**12.244 - d43**	**ST compr. 1 enable**	DO	parallel compression digital compressor enable
	12.245 - d44	**ST compr. 2 enable**	DO	
	12.246 - d45	**ST compr. 3 enable**	DO	
	12.247 - d46	**ST compr. 4 enable**	DO	
	12.171 - i112	**Receiv.MP valve fail**	di	Receiver valve alarm digital input
Analog	**12.258 - 08n**	**Receiver MP valve**	AO	Receiver valve analogue output
	12.053 - 37P	**HP receiver press.**	AI	Receiver pressure probe (I/O number)
	12.054 - 37L	**HP receiver P 4mA**		Receiver pressure analogue input lower limit
	12.055 - 37H	**HP receiver P 20mA**		Receiver pressure analogue input upper limit

7.7.8. Parallel compression (PC) regulation

The regulation has up to 4 digital compressors of which maximum one at variable speed and is equivalent to the regulation for the LT and HT line compressors, controlling the CO2 suction pressure (12.053 - 37P: HP Receiver Pressure) according to the setpoint 08.001 - rSt.

The regulation is based on a PID with proportional band; when the plant is running the regulation is always on with the exception of the stand-by status or if there is an alarm. In the event of pressure transducer malfunction, the valve is forced open by the value 08.003 - rPr.

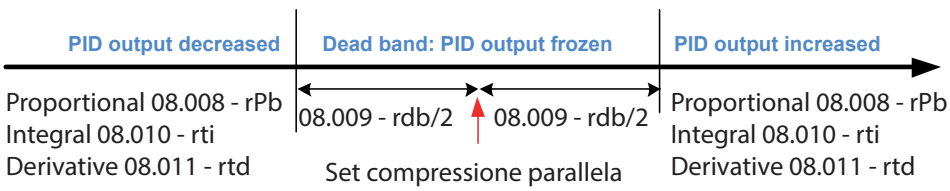

Fig. 92. Parallel compression regulation PID Dead Band

The parallel compression managing compressors are activated if:

- the opening percentage % of the Flash Gas Valve exceeds the threshold 08.026 - Sot for a minimum period defined by 08.027 - Sod
- the HP valve pressure exceeds the threshold 08.028 - SHt
- the gascooler output temperature exceeds the threshold 08.029 - SFt
- at least one compressor in the parallel compression battery is available

With parallel compression management active:

- the FGV valve pressure increases by an offset 08.030 - SoP
- the parallel compression remains active until the liquid receiver pressure falls below the value 08.040 - Sit.

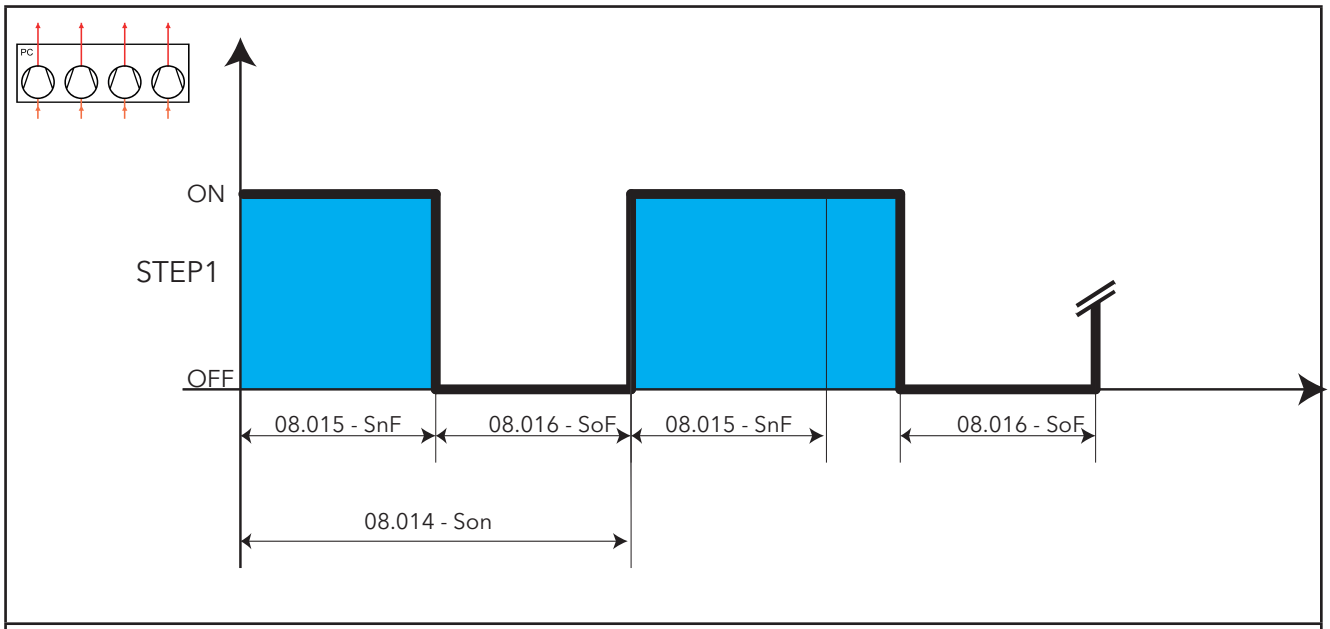

Fig. 93. PC compressor protection

7.7.9. Parallel compression parameters | 3-8-2 Parallel compr.

LABEL	LABEL	DESCRIPTION	RANGE	DEFAULT	M.U.	LEVEL
3-8-2 Parallel compr. 3-8-2-1 Compressors						
08.012 - SCn	**ST num of compressor**	PC line compressors number	0...4	0	num	**3**
08.013 - SrP	**Compr. rated power**	PC line compressor rated power	0...65535	100	num	**3**
08.014 - Son	**Compr. on-on time**	PC line compressor on-on time	0...999	120	s	**2**
08.015 - SnF	**Compr. on-off time**	PC line compressor on-off time	0...999	15	s	**2**
08.016 - SoF	**Compr. off-on time**	PC line compressor off-on time	0...999	30	s	**2**
08.017 - Sin	**Compr.step inc delay**	PC line interstep on time	0...999	30	s	**2**
08.018 - SdE	**Compr.step dec delay**	PC line interstep off time	0...999	20	s	**2**
08.019 - SSd	**Shutdown time**	Shutdown time PC line	0...999	20	s	**2**
08.020 - SPr	**ST out error perc.**	PC line % power if suction probe error	0...100	0	%	**2**
08.021 - SHP	**ST max out perc.**	Parallel compression line % power limitation.	0...100	0	%	**2**
3-8-2 Parallel compr. 3-8-2-2 Regulation						
08.001 - rSt	**Set**	Receiver regulation set	-1.0...160.0	0.5	bar	**2**
08.022 - SPb	**ST proportional band**	PC line proportional band	0.0...160.0	0.5	bar	**2**
08.023 - Sdb	**ST dead band**	PC line dead band	0.0...160.0	0	bar	**2**
08.024 - Si	**ST integral coeff.**	PC line integral factor	0...65535	20.0	num	**2**
08.025 - Sd	**ST derivative coeff.**	PC line derivative factor	0...65535	0	num	**2**
08.026 - Sot	**FGV min % start ST**	Flash gas min % to activate the PC line	0...100	30	%	**2**
08.027 - Sod	**ST delay from FGV**	PC activation delay after flash gas valve min %	0...999	120	s	**2**
08.028 - SHt	**HP min pres.start ST**	HP pressure min value to activate PC	-1.0...160.0	85.0	bar	**2**
08.029 - SFt	**GC min temp.start ST**	Gascooler temperature min value to activate PC	-20.0...800.0	40.0	bar	**2**
08.030 - SoP	**FGV set offset**	Flash gas valve offset on PC active	-1.0...160.0	20	bar	**2**

LABEL	LABEL	DESCRIPTION	RANGE	DEFAULT	M.U.	LEVEL
3-8-2 Parallel compr. 3-8-2-3 Inverter						
08.031 - inS	**Num. of inverters**	PC line inverters number	0...1	0	flag	**3**
08.032 - SLF	**Inv. min freq.**	PC line inverter min frequency	0...65535	0	num	**3**
08.033 - SHF	**Inv. max freq.**	PC line inverter max frequency	0...65535	0	num	**3**
08.034 - SiL	**Voltage min**	PC line inverter min driving voltage	0.0...10.00	0.00	V	**3**
08.035 - SiH	**Voltage max**	PC line inverter max driving voltage	0.0...10.00	10.00	V	**3**
08.036 - SiP	**Inv. rated power**	PC line inverter rated power	0...65535	100	num	**3**
08.037 - Sir	**Inv. regulation mode**	PC line inverter mode	0...65535	0	num	**3**
08.038 - SSS	**Inv. % var. near set**	PC line % inverter variation near set	0...100	3	%	**3**
08.039 - SSF	**Inv. % var. far set**	PC line % inverter variation far from set	0...100	8	%	**3**
08.040 - Sit	**Inv. off threshold**	PC line shutdown threshold	-1.0...160.0	34.0	bar	**3**
08.041 - SSP	**Inverter start %**	PC line inverter start %	0...100	1	%	**3**
08.042 - SiS	**Inverter start time**	PC line inverter start time	0...999	30	s	**3**
08.043 - SiE	**Inverter reg. period**	PC line inverter timeout 1% (shutdown) or 100% (step activation)	0...999	10	s	**3**

7.7.10. Parallel compression alarms

11.145 - A147	**Receiver low press.**	Receiver low pressure alarm mode	0...2	0	num	**2**
		Receiver low pressure alarm priority	0...3	0	num	**2**
11.146 - A148	**Receiver high press.**	Receiver high pressure alarm mode	0...2	0	num	**2**
		Receiver high pressure alarm priority	0...3	0	num	**2**
11.147 - A149	**Receiver valve fail**	Receiver valve alarm mode	0...2	0	num	**2**
		Receiver valve alarm priority	0...3	0	num	**2**
11.148 - A150	**Receiver valve fail**	Receiver valve max number of alarms in the window time	5...255	5	min	**2**
		Receiver valve alarm window time	0...32	0	num	**2**
11.149 - A151	**ST comp.therm. switch**	PC line alarm mode compressor thermal switch	0...3	0	num	**2**
		PC line alarm priority compressor thermal switch	0...2	0	num	**2**
11.150 - A152	**ST comp.therm. switch**	PC line max number of alarms in the window time compressor thermal switch	5...255	5	min	**2**
		PC line window time compressor thermal switch	0...32	0	num	**2**
11.151 - A153	**ST comp. high press.**	PC line alarm mode high pressure compressor	0...2	0	num	**2**
		PC line alarm priority high pressure compressor	0...3	0	num	**2**
11.152 - A154	**ST comp. high press.**	PC line max number of alarms in the window time high pressure compressor	5...255	5	min	**2**
		PC line window time high pressure compressor	0...32	0	num	**2**
11.153 - A155	**ST comp. oil**	PC line alarm mode oil compressor	0...2	0	num	**2**
		PC line alarm priority oil compressor	0...3	0	num	**2**
11.154 - A156	**ST comp. oil**	PC line max number of alarms in the window time compressor oil	5...255	5	min	**2**
		PC line window time compressor oil	0...32	0	num	**2**
11.155 - A157	**ST compr. gen. alarm**	PC line alarm mode general compressor	0...2	0	num	**2**
		PC line alarm priority general compressor	0...3	0	num	**2**
11.156 - A158	**ST compr. gen. alarm**	PC line max number of alarms in the window time general compressor	5...255	5	min	**2**
		PC line window time general compressor	0...32	0	num	**2**
11.157 - A159	**ST inverter motor protection**	PC line alarm mode inverter motor protection	0...2	0	num	**2**
		PC line alarm priority inverter motor protection	0...3	0	num	**2**
11.158 - A160	**ST inverter motor protection**	PC line max number of alarms in the window time inverter motor protection	5...255	5	min	**2**
		PC line window time inverter motor protection	0...32	0	num	**2**

11.159 - A190	**PC Lo superheat**	PC line alarm mode low superheat	0...2	0	num	**2**
		PC line alarm priority low superheat	0...3	0	num	**2**
11.160 - A191	**PC Hi superheat**	PC line alarm mode high superheat	0...2	0	num	**2**
		PC line alarm priority high superheat	0...3	0	num	**2**
11.161 - A161	**CO2 level 1**	CO2 level 1 alarm type	0...2	0	num	**2**
		CO2 level 1 alarm priority	0...3	0	num	**2**
11.162 - A162	**CO2 level 2**	CO2 level 2 alarm type	0...2	0	num	**2**
		CO2 level 2 alarm priority	0...3	0	num	**2**
11.163 - A163	**CO2 level 3**	CO2 level 3 alarm type	0...2	0	num	**2**
		CO2 level 3 alarm priority	0...3	0	num	**2**
11.164 - A164	**CO2 level 4**	CO2 level 4 alarm type	0...2	0	num	**2**
		CO2 level 4 alarm priority	0...3	0	num	**2**
11.165 - A165	**CO2 level 5**	CO2 level 5 alarm type	0...2	0	num	**2**
		CO2 level 5 alarm priority	0...3	0	num	**2**
11.166 - A166	**CO2 level**	CO2 level max number of alarms in the window time	0...32	0	num	**2**
		CO2 level alarm window time	5...255	5	min	**2**
11.167 - A167	**CO2 low level**	CO2 level alarm mode	0...2	0	num	**2**
		CO2 level alarm priority	0...3	0	num	**2**
11.168 - A168	**CO2 low level**	CO2 level alarm set	-3276,8...3276,7	0	num	**2**
11.169 - A169	**CO2 level diff.**	CO2 level alarm differential	-3276,8...3276,7	0	num	**2**
11.170 - A170	**CO2 level bypass**	CO2 level alarm bypass	0...999	0	s	**2**
11.171 - A171	**Receiver high press.**	Receiver high pressure alarm threshold	-1.0...160.0	42.0	bar/ psi	**2**
11.172 - A172	**Receiver low press.**	Receiver low pressure alarm threshold	-1.0...160.0	30.0	bar/ psi	**2**
11.173 - A173	**Rec. alarm diff.**	Receiver alarm differential	1.0...160.0	5.0	bar/ psi	**2**
11.174 - A174	**ST HP comp. alm byp**	PC line high pressure compressor alarm bypass	0...999	0	s	**2**
11.175 - A175	**ST high oil comp. byp**	PC line compressor oil high level alarm bypass	0...999	0	s	**2**
11.176 - A176	**ST low oil comp. byp**	PC line compressor oil low level alarm bypass	0...999	0	s	**2**
11.177 - A192	**Min super heating**	PC line min superheat	-200.0...800.0	0	°C/°F	**2**
11.178 - A193	**Low superheat byp**	PC line low superheat alarm bypass	0...999	0	s	**2**
11.179 - A194	**Max super heating**	PC line max superheat	-200.0...800.0	0	°C/°F	**2**
11.180 - A195	**High superheat. byp**	PC line high superheat alarm bypass	0...999	0	s	**2**
11.181 - A196	**Super heating diff.**	PC line differential superheat	1...800	0	°C/°F	**2**

7.8. Intermediate heat exchanger (HE)

In some installations there is an intermediate exchanger between the LT and HT line compressors.
The refrigerant is cooled via a specific exchanger (intermediate exchanger).

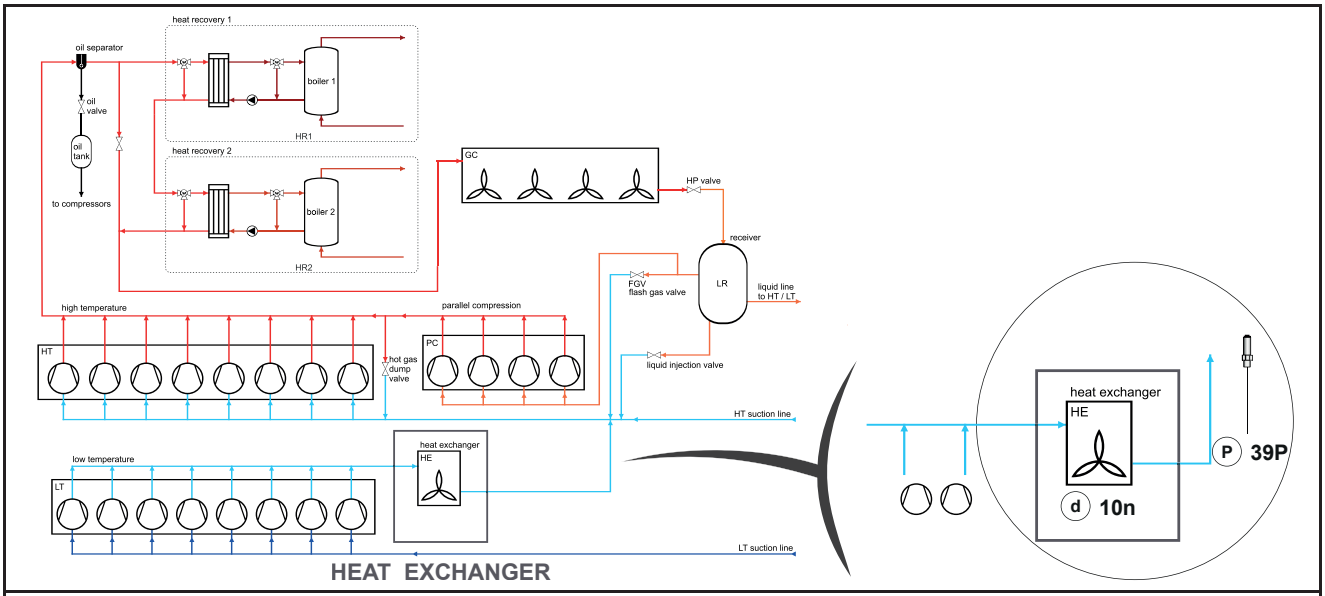

Fig. 94. CO2 Boost System - intermediate heat exchanger

7.8.1. Intermediate heat exchanger resource allocation

Resource allocation	label	parameter	type	description
Analog	**12.260 - 10n**	**Heat exch. fan**	AO	SSR relay
	12.058 - 39P	**Heat exch. out temp.**	AI	Heat exchanger output temperature probe
Digital	**12.199 - i139**	**HE alarm**	di	Heat exchanger alarm digital input
	12.249 - d48	**HE Activation**	dO	Consent to regulation (on if actuation > 0%).

Refer to CHAPTER 3 “Electrical connections” page 33 for the number and type of inputs/outputs and for information on the symbols used on labels supplied with the device.

7.8.2. Intermediate heat exchanger regulation

The regulation is based on a PID with proportional band; the speed of a variable speed fan is controlled by controlling the temperature 12.058 - 39P (heat exchanger output temperature probe) according to the setpoint 09.001 - HES.
The HE digital output acts as consent for the actuator, i.e. it will be active when the output is greater than 0%.
It is possible to control a “digital” fan by connecting it only to the consent, but the regulation will always be based on a PID.

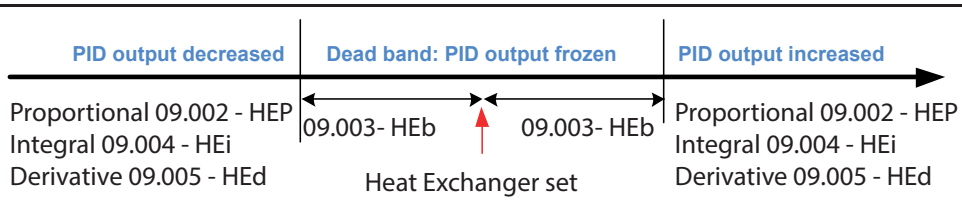

Fig. 95. 3 way bypass valve regulation PID Dead Band

7.8.3. Intermediate heat exchanger parameters | 3-9 Heat Exchanger

LABEL	LABEL	DESCRIPTION	RANGE	DEFAULT	M.U.	LEVEL
3-9 Heat Exchanger						
09.001 - HES	**HE setpoint**	Heat exchanger set	-200.0...800.0	20.0	°C/°F	**2**
09.002 - HEP	**Proportional band**	Heat exchanger proportional band	0.0...800.0	20.0	°C/°F	**2**
09.003 - HEb	**Dead band**	Heat exchanger dead band	0.0...800.0	0.0	°C/°F	**2**
09.004 - HEi	**Integral time**	Heat exchanger integral time	0...65535	0	num	**2**
09.005 - HEd	**Derivative time**	Heat exchanger derivative time	0...65535	0	num	**2**

7.8.4. Intermediate exchanger alarms

7.8.4.1. Intermediate exchanger digital and analogue alarms

11.182 - A181	**Heat exch. alarm**	Heat exchanger alarm mode	0...2	0	num	**2**
		Heat exchanger alarm priority	0...3	0	num	**2**
11.183 - A182	**Heat exch. alarm**	Heat exchanger max number of alarms in the window time	5...255	5	min	**2**
		Heat exchanger alarm window time	0...32	0	num	**2**

7.8.4.2. Intermediate exchanger alarms table

ID	description	alarm type	Priority	input	bypass	effect
15	**Heat exchanger output temperature probe failure**	probe	-	39P	-	warning + AI %
72	**Heat exchanger alarm**	digital	X	i139	-	resource blocked

7.9. Oil management (oil)

The oil separator separates the oil from the coolant before entering the gascooler and deposits it in the oil recovery before injecting it into the compressors.

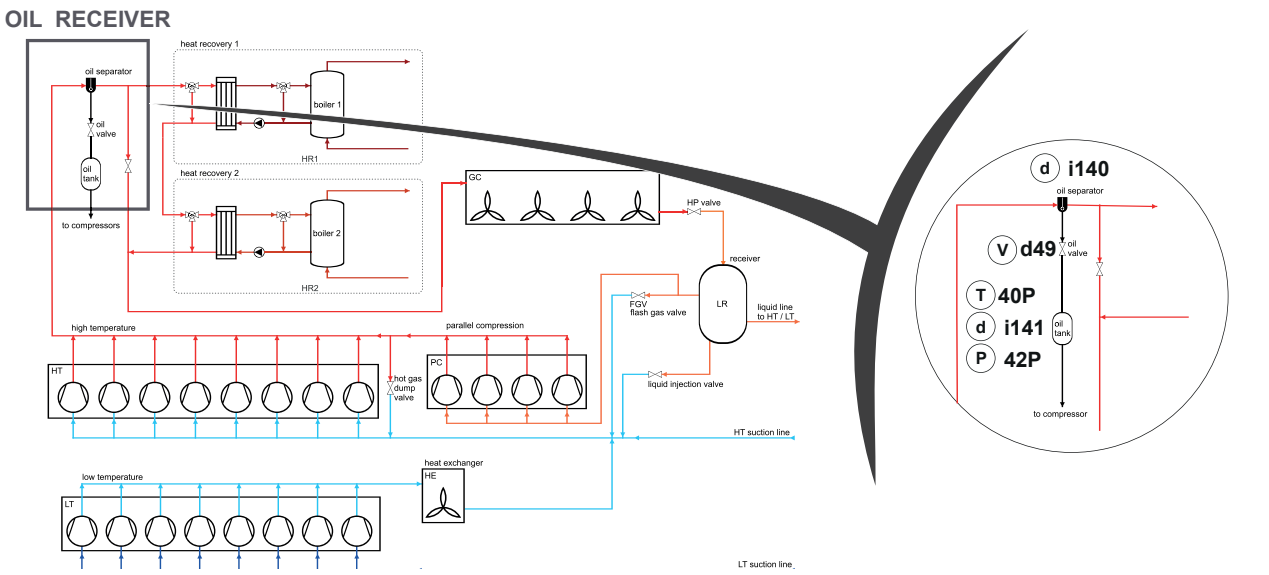

Fig. 96. CO2 Boost System - oil separator

7.9.1. Oil resource allocation

The oil separator is activated by an ON-OFF valve controlled by an appropriately configured digital output 12.250 - d49. An SSR relay and not a conventional relay must be configured to avoid limitations to the cycles and relay operations.

NOTICE

INOPERABLE DEVICE

Activate the oil separator ON OFF valve via an appropriately configured SSR output.

Failure to follow these instructions can result in equipment damage.

Refer to CHAPTER 3 “Electrical connections” page 33 for the number and type of inputs/outputs and for information on the symbols used on labels supplied with the device.

Resource allocation	label	parameter	Type	description
Analog	**12.059 - 40P**	**Oil temp.**	Ai	oil temperature probe
	12.262 - 42P	**Oil Receiver P.**	Ai	Oil Pressure Probe
Digital	**12.200 - i140**	**Oil separator**	di	oil level signal on
	12.201 - i141	**Oil level**	di	oil level
	12.250 - d49	**Oil valve**	AO	SSR relay

7.9.2. Oil management regulation

The oil valve management is active only when:
- The equipment is in ON status.
- The system is not blocked by a serious failure.
- HT line or PC line compressors are running.

Running status is monitored by means of a digital input (**12.116 - i57** for HT line or **12.198 – i142** for the PC line).
When a digital input is non configured then a compressor line is considered running if the displacement computed by the regulator is greater than zero.
The oil recovery management has two cases, with or without activation of the oil level function depending on the digital input **12.200 - i140** being configured or not.

7.9.2.1. Example without oil level signal

The oil valve remains open for a variable time between **10.001 - oon** and **10.002 - oHo** and is proportional to the power delivered to the compressors. If **10.002 - oHo** = 0 then the activation time is fixed by the parameter **10.001 - oon**.
The valve remains off for the time **10.003 – ooF**.

7.9.2.2. Example with oil level signal

The oil valve opens only when the HT line compressors are running and the digital input **12.200 - i140** is active.

7.9.3. Oil pressure control

The oil flow is managed by default by the standard oil management with/without oil level signal control (**10.004 - orE** = 0).
In parallel with the oil management regulation with/without oil level signal control an ON/OFF regulator can be enabled.
This ON/OFF regulator is enabled by setting **10.004 orE** = 1 and it will be operational when the oil valve management is active.
The regulator takes as input the pressure difference between the oil receiver (**42P**) and the liquid receiver (**37P**)
Set point **10.005 - orS** is a pressure difference, with differential **10.006 - ord**.
A delay timer **10.007 - orL** can be set: if the regulator is still active the oil valve becomes active. As soon as the regulator becomes inactive the oil valve will be managed by default management.
In case of oil receiver inoperable probe or liquid receiver inoperable probe the oil pressure control regulator will be disabled.

7.9.4. Oil parameters | 3-10 Oil

LABEL	LABEL	DESCRIPTION	RANGE	DEFAULT	M.U.	LEVEL
3-10 Oil						
10.001 - oon	**Oil valve min on**	Oil valve on min time	0...999	3	s	**2**
10.002 - oHo	**Oil valve max on**	Oil valve on maximum time	0...999	5	s	**2**
10.003 - ooF	**Oil valve off time**	Oil valve off time	0...60000	300	s	**2**
10.004 - orE	**Oil P. Reg. Enable**	Oil receiver enable delta pressure regulation	0...1	0	flag	**2**
10.005 - orS	**Oil P. Set**	Oil receiver set delta pressure	-3276.8...160.0	0.0	bar/ psi	**2**
10.006 - ord	**Oil P. Diff**	Oil receiver differential delta pressure	0.0...160.0	0.0	bar/ psi	**2**
10.007 - orL	**Oil P. Reg. Delay**	Oil receiver delay delta pressure regulation	0...900	0	s	**2**

7.9.5. Oil management alarms

7.9.5.1. Oil digital and analogue alarms

3-11-9 Oil						
11.184 - A183	**Oil level**	Oil level alarm mode	0...2	0	num	**2**
		Oil level alarm priority	0...3	0	num	**2**
11.185 - A184	**Oil level**	Oil level max number of alarms in the window time	5...255	5	min	**2**
		Oil level window time	0...32	0	num	**2**
11.186 - A185	**Oil level alm byp**	Oil level alarm bypass	0...999	0	s	**2**
11.187 - A186	**Oil temp. probe err.**	Oil alarm mode temperature probe error	0...2	0	num	**2**
		Oil alarm priority temperature probe error	0...3	0	num	**2**
11.188 - A187	**Oil high temp.**	Oil alarm mode high temperature	0...2	0	num	**2**
		Oil alarm priority high temperature	0...3	0	num	**2**
11.189 - A188	**Oil high temp.**	Oil high temperature alarm threshold	-200.0...800.0	0	°C/°F	**2**
11.190 - A189	**Oil high temp.**	Oil high temperature alarm differential	-200.0...800.0	0	°C/°F	**2**
11.191 - A199	**Oil Hi Press.**	Oil Receiver - high pressure alarm mode	0...2	0	num	**2**
		Oil Receiver - high pressure alarm priority	0...3	0	num	**2**
11.192 - A200	**Oil Hi Press. Set**	Oil Receiver - high pressure alarm set	-14,5 ... 2320	0	bar/psi	**2**
11.193 - A201	**Oil Lo Press.**	Oil Receiver - low pressure alarm mode	0...2	0	num	**2**
		Oil Receiver - low pressure alarm priority	0...3	0	bar/psi	**2**
11.194 - A202	**Oil Hi Press. Set**	Oil Receiver - low pressure alarm set	-14,5 ... 2320	0	bar/psi	**2**
11.195 - A203	**Oil Hi/Lo P. Bypass**	Oil Receiver - pressure alarm bypass		0	s	**2**
11.196 - A204	**Oil Hi/Lo P. Diff**	Oil Receiver - pressure alarms differential		0	bar/psi	**2**
11.197 - A205	**Oil P. Alarm Source**	Oil Receiver - pressure alarm source		0	num	**2**

7.9.5.2. Oil alarms table

ID	description	alarm type	Priority	input	bypass	effect
17	**Oil temperature probe failure**	probe	X	40P	-	plant shutdown
41	**Oil Pressure Probe error**	probe	X	42P	-	resource blocked
59	**Oil level alarm**	digital	X	i141	X	plant shutdown
285	**Oil high temperature alarm**	input	X	40P	-	plant shutdown

CHAPTER 8
Parameters

Parameter setting allows the integral configuration of the **EWCM 9000 PRO**.
Parameters can be changed by:
- Keys on the front panel of the **EWCM 9000 PRO 42D (/SSR)** or remote panel of the **EVK PRO DISPLAY graphic display** (programmable via the controller application).
- PC and software **FREE Studio (v.3.9.1.2 or greater) / FREE Studio Plus (v.1.0.0)**.

The following sections provide a detailed analysis of each parameter, divided into categories (folders).

For **EWCM 9000 PRO**, the parameters table includes all configuration parameters for the device memorised in the non-volatile memory.

8.9.5.1. Modbus commands available and data areas

The following commands are implemented:

Modbus command	Description of command
3 (**0x03**)	Reading more than one log on the Client side
6 (**0x06**)	Writing only one log on the Client side
16 (**0x10**)	Writing on more than one lo on the Client side
43 (**0x2B**)	Read device ID: • Manufacturer ID • Model ID • Version ID

8.1. EWCM 9000 PRO parameters table

This table shows the headings of the columns in the following parameters table.

Column	Description
LABEL	This indicates the label used to display the parameters in the menu of the device.
PAR. VALUE ADDRESS	Indicates the address of the modbus register containing the resource to be accessed. **NOTE**. The address shown is the frame coding in ADU mode.
DATA SIZE	Indicates the size of the data in bits.
CPL	Indicates the conversion of the register value. To carry out conversion, proceed as follows: • If the value in the register is between 0 and 32.767, the result is the value itself (zero and positive values) • If the value in the register is between 32768 and 65535, the result is the value of the register minus 65536 (negative values) • If the field indicates “-1”, the value read by the register requires conversion, because the value represents a number with a sign.
RANGE	Describes the interval of values that can be assigned to the parameter. It can be correlated with other parameters in the device (indicated with the parameter label).
DEFAULT	Indicates the factory-set value.
M.U.	Indicates the unit of measure for values converted according to the rules indicated in the CPL column. The unit of measure shown is an example only, as it may change depending on the application (e.g. parameters with a U.M. °C/bar/psi could also have a U.M. %RH).
LEVEL	0 sempre visibile / always visible 1 password 1 utente / user 2 password 2 Installatore / installer 3 password 3 manufacturer

8.1.1. EWCM 9000 PRO passwords

To manage level 1-3 passwords, enter the Password menu.
Set the passwords appropriately from menu 8.3:

- Access level 1
- Access level 2
- Access level 3

By default all levels are visible and the password is 0.
Having edited the password the menu is visible or hidden according to what entered in menu 8.1.

8.1.2. | 3-13 Bios

LABEL	LABEL	PAR. VALUE ADDRESS	DATA SIZE	CPL	DESCRIPTION	RANGE	DEFAULT	M.U.	LEVEL
3-13-4 AI Configuration									
13.037 - P01	**Config. EWCM AI1**	**15726**	WORD	-	**Ai1 analogue input type** • 0= NTC (NK103) • 1 = DI input • 2 = NTC (103AT) • 3 = 4…20 mA • 4 = 0...10 V • 5 = 0...5 V (Ratiometric) • 6 = Pt1000 • 7 = hΩ (NTC) • 8 = daΩ (Pt1000) • 9 = PTC • 10 = 0...5 V • 11 = 0...20 mA	0 ... 11	3	num	**3**
13.038 - P02	**Config. EWCM AI2**	**15727**	WORD	-	**Ai2 analogue input type** See Config. EWCM AI1	0 ... 11	3	num	**3**
13.039 - P03	**Config. EWCM AI3**	**15728**	WORD	-	**Ai3 analogue input type** See Config. EWCM AI1	0 ... 11	3	num	**3**
13.040 - P04	**Config. EWCM AI4**	**15729**	WORD	-	**Ai4 analogue input type** See Config. EWCM AI1	0 ... 11	3	num	**3**
13.041 - P05	**Config. EWCM AI5**	**15730**	WORD	-	**Ai5 analogue input type** See Config. EWCM AI1	0 ... 11	2	num	**3**
13.042 - P06	**Config. EWCM AI6**	**15731**	WORD	-	**Ai6 analogue input type** See Config. EWCM AI1	0 ... 11	2	num	**3**
13.043 - P07	**Config. EWCM AI7**	**16100**	WORD	-	**Ai7 analogue input type** See Config. EWCM AI1	0 ... 11	2	num	**3**
13.044 - P08	**Config. EWCM AI8**	**16101**	WORD	-	**Ai8 analogue input type** See Config. EWCM AI1	0 ... 11	2	num	**3**

LABEL	LABEL	PAR. VALUE ADDRESS	DATA SIZE	CPL	DESCRIPTION	RANGE	DEFAULT	M.U.	LEVEL
13.045 - P09	**Config. EWCM AI9**	**16102**	WORD	-	**Ai9 analogue input type** • 0= NTC (NK103) • 1= DI input • 2= NTC (103AT) • 3 = 4…20 mA • 4=0...10 V • 5=0...5 V (Ratiometric) • 6=Pt1000 • 7=hΩ (NTC) • 8=daΩ (Pt1000) • 9=PTC • 10=0...5 V • 11=0...20 mA	0 ... 11	2	num	**3**
13.046 - P10	**Config. EWCM AI10**	**16103**	WORD	-	**Ai10 analogue input type** See Config. EWCM AI1	0 ... 11	2	num	**3**
13.047 - P11	**Config. EWCM AI11**	**16104**	WORD	-	**Ai11 analogue input type** See Config. EWCM AI1	0 ... 11	0	num	**3**
13.048 - P12	**Config. EWCM AI12**	**16105**	WORD	-	**Ai12 analogue input type** See Config. EWCM AI1	0 ... 11	0	num	**3**
13.049 - P13	**Config. EXP1 AI1 - AI2**	**16969**	WORD	-	**Ai1/Ai2 analogue input EXP1 expansion type** Configuration in pairs • 0= NTC (NK103) • 1 = DI input • 2 = NTC (103AT) • 3 = 4…20 mA • 4 = 0...10 V • 5 = 0...5 V (Ratiometric) • 6 = Pt1000 • 7 = hΩ (NTC) • 8 = daΩ (Pt1000) • 9 = PTC • 10 = 0...5 V	0 ... 10	0	num	**3**
13.050 - P14	**Config. EXP1 AI3 - AI4**	**16970**	WORD	-	**Ai3/Ai4 analogue input EXP1 expansion type** Configuration in pairs See **13.049 - P13**	0 ... 10	0	num	**3**
13.051 - P15	**Config. EXP2 AI1 - AI2**	**16971**	WORD	-	**Ai1/Ai2 analogue input EXP2 expansion type** Configuration in pairs See **13.049 - P13**	0 ... 10	0	num	**3**

LABEL	LABEL	PAR. VALUE ADDRESS	DATA SIZE	CPL	DESCRIPTION	RANGE	DEFAULT	M.U.	LEVEL
13.052 - P16	**Config. EXP2 AI3 - AI4**	**16972**	WORD	-	**Ai3/Ai4 analogue input EXP2 expansion type** Configuration in pairs See **13.049 - P13**	0 ... 10	0	num	**3**
13.053 - P17	**Config. EXP3 AI1 - AI2**	**16973**	WORD	-	**Ai1/Ai2 analogue input EXP3 expansion type** Configuration in pairs See **13.049 - P13**	0 ... 10	0	num	**3**
13.054 - P18	**Config. EXP3 AI3 - AI4**	**16974**	WORD	-	**Ai3/Ai4 analogue input EXP3 expansion type** Configuration in pairs See **13.049 - P13**	0 ... 10	0	num	**3**
13.055 - P19	**Config. EXP4 AI1 - AI2**	**16975**	WORD	-	**Ai1/Ai2 analogue input EXP4 expansion type** Configuration in pairs See **13.049 - P13**	0 ... 10	0	num	**3**
13.056 - P20	**Config. EXP4 AI3 - AI4**	**16976**	WORD	-	**Ai3/Ai4 analogue input EXP4 expansion type** Configuration in pairs See **13.049 - P13**	0 ... 10	0	num	**3**
13.057 - P21	**Config. EXP5 AI1 - AI2**	**16977**	WORD	-	**Ai1/Ai2 analogue input EXP5 expansion type** Configuration in pairs See **13.049 - P13**	0 ... 10	0	num	**3**
13.058 - P22	**Config. EXP5 AI3 - AI4**	**16978**	WORD	-	**Ai3/Ai4 analogue input EXP5 expansion type** Configuration in pairs See **13.049 - P13**	0 ... 10	0	num	**3**
13.059 - P23	**Config. EXP6 AI1 - AI2**	**16979**	WORD	-	**Ai1/Ai2 analogue input EXP6 expansion type** Configuration in pairs See **13.049 - P13**	0 ... 10	0	num	**3**
13.060 - P24	**Config. EXP6 AI3 - AI4**	**16980**	WORD	-	**Ai3/Ai4 analogue input EXP6 expansion type** Configuration in pairs See **13.049 - P13**	0 ... 10	0	num	**3**
13.061 - P25	**Config. EXP7 AI1/ AI2**	**16981**	WORD	-	**Ai1/Ai2 analogue input EXP7 expansion type** Configuration in pairs See **13.049 - P13**	0 ... 10	0	num	**3**
13.062 - P26	**Config. EXP7 AI3 - AI4**	**16982**	WORD	-	**Ai3/Ai4 analogue input EXP7 expansion type** Configuration in pairs See Config. EWCM AI1	0 ... 10	0	num	**3**
13.063 - P27	**Config. EXP8 AI1 - AI2**	**16983**	WORD	-	**Ai1/Ai2 analogue input EXP8 expansion type** Configuration in pairs See Config. EWCM AI1	0 ... 10	0	num	**3**

LABEL	LABEL	PAR. VALUE ADDRESS	DATA SIZE	CPL	DESCRIPTION	RANGE	DEFAULT	M.U.	LEVEL
13.064 - P28	**Config. EXP8 AI3 - AI4**	**16984**	WORD	-	**Ai3/Ai4 analogue input EXP8 expansion type** Configuration in pairs See Config. EWCM AI1	0 ... 10	0	num	**3**
13.065 - P29	**Config. EXP9 AI1 - AI2**	**16985**	WORD	-	**Ai1/Ai2 analogue input EXP9 expansion type** Configuration in pairs See Config. EWCM AI1	0 ... 10	0	num	**3**
13.066 - P30	**Config. EXP9 AI3 - AI4**	**16986**	WORD	-	**Ai3/Ai4 analogue input EXP9 expansion type** Configuration in pairs See Config. EWCM AI1	0 ... 10	0	num	**3**
13.067 - P31	**Config. EXP10 AI1 - AI2**	**16987**	WORD	-	**Ai1/Ai2 analogue input EXP10 expansion type** Configuration in pairs See Config. EWCM AI1	0 ... 10	0	num	**3**
13.068 - P32	**Config. EXP10 AI3 - AI4**	**16988**	WORD	-	**Ai3/Ai4 analogue input EXP10 expansion type** Configuration in pairs See Config. EWCM AI1	0 ... 10	0	num	**3**
13.069 - P33	**Config. EXP11 AI1 - AI2**	**16989**	WORD	-	**Ai1/Ai2 analogue input EXP11 expansion type** Configuration in pairs See Config. EWCM AI1	0 ... 10	0	num	**3**
13.070 - P34	**Config. EXP11 AI3 - AI4**	**16990**	WORD	-	**Ai3/Ai4 analogue input EXP11 expansion t** Configuration in pairs See Config. EWCM AI1	0 ... 10	0	num	**3**
13.071 - P35	**Config. EXP12 AI1 - AI2**	**16991**	WORD	-	**Ai1/Ai2 analogue input EXP12 expansion type** Configuration in pairs See Config. EWCM AI1	0 ... 10	0	num	**3**
13.072 - P36	**Config. EXP12 AI1 - AI2**	**16992**	WORD	-	**Ai3/Ai4 analogue input EXP12 expansion type** Configuration in pairs See Config. EWCM AI1	0 ... 10	0	num	**3**
3-13-4 AO Configuration									
13.073 - n01	**Config. EWCM AO3**	**15758**	WORD	-	**Type of analogue output AO3** • 0 = current modulation • 1 = ON/OFF current • 2= voltage modulation • 3= PWM mode	0 ... 3	2	num	**3**
13.074 - n02	**Config. EWCM AO4**	**15759**	WORD	-	**Type of analogue output AO4** **See Config. EWCM AO3**	0 ... 3	2	num	**3**

LABEL	LABEL	PAR. VALUE ADDRESS	DATA SIZE	CPL	DESCRIPTION	RANGE	DEFAULT	M.U.	LEVEL
3-13-1 RS485 configuration									
13.001 - Add1	**Address**	**16124**	WORD	-	**Serial address RS 485 On-Board**	0 ... 255	1	num	**3**
13.002 - PtS1	**Protocol**	**16125**	WORD	-	**RS 485 On-Board protocol selection** • 2 = uNET • 3 = Modbus/RTU	2, 3	3	num	**3**
13.003 - dbn1	**Data bit number**	**16126**	WORD	-	**On-board RS485 data bit number** Fixed setting 8	8	8	num	**3**
13.004 - StP1	**Stop bit number**	**16127**	WORD	-	**On-board RS485 stop bit number** 1= 1 stop bit 2= 2 stop bit	1, 2	1	num	
13.005 - PtY1	**Parity**	**16128**	WORD	-	**RS 485 On-Board protocol parity** • 0= NULL • 1= ODD • 2= EVEN	0 ... 2	2	num	**3**
13.006 - bAU1	**Baud rate**	**16129**	WORD	-	**Speed in Baud RS 485 On-Board protocol** • 0 = 9600 baud • 1 = 19200 baud • 2 = 38400 baud • 3 = 57600 baud • 4 = 76800 baud • 5 = 115200 baud	0 ... 5	0	num	**3**
3-13-1 RS485 configuration									
13.007 - Add2	**Address**	**15774**	WORD	-	**Serial address RS 485 On-Board**	0 ... 255	1	num	**3**
13.008 - PtS2	**Protocol**	**15775**	WORD	-	**RS 485 On-Board protocol selection** • 2 = uNET • 3 = Modbus/RTU	2, 3	3	num	**3**
13.009 - dbn2	**Data bit number**	**15776**	WORD	-	**On-board RS485 data bit number** Fixed setting 8	8	8	num	**3**
13.010 - StP2	**Stop bit number**	**15777**	WORD	-	**On-board RS485 stop bit number** 1= 1 stop bit 2= 2 stop bit	1, 2	1	num	**3**

LABEL	LABEL	PAR. VALUE ADDRESS	DATA SIZE	CPL	DESCRIPTION	RANGE	DEFAULT	M.U.	LEVEL
13.011 - PtY2	**Parity**	**15778**	WORD	-	**RS 485 On-Board protocol parity** • 0= NULL • 1= ODD • 2= EVEN	0 ... 2	2	num	**3**
13.012 - bAU2	**Baud rate**	**15779**	WORD	-	**Speed in Baud RS 485 On-Board protocol** • 0 = 9600 baud • 1 = 19200 baud • 2 = 38400 baud • 3 = 57600 baud • 4 = 76800 baud • 5 = 115200 baud	0 ... 5	0	num	**3**
3-13-2 CAN configuration									
13.013 - CAb	**Address on board**	**15780**	WORD	-	**CAN On-Board protocol serial address**	1 …127	1	num	**3**
13.014 - CbA	**Baud rate on board**	**15781**	WORD	-	**Speed in Baud CAN On-Board protocol** • 2=500 kbps • 3=250 kbps • 4=125 kbps • 5=125 kbps • 6=50 kbps	2 … 6	2	num	**3**
13.075 - CPA	**Plug-in address**	**15788**	WORD	-	**Serial address of passive CAN expansion bus communication module**	1 … 127	1	num	**3**
13.076 - CPb	**Baud rate plug-in**	**15789**	WORD	-	**Speed in Baud of passive CAN expansion bus communication module** • 2=500 kbps • 3=250 kbps • 4=125 kbps • 5=125 kbps • 6=50 kbps	2 … 6	2	num	**3**
3-13-3 ETH Configuration									
13.015 - IPn	**TCP/IP port**	**15797**	WORD	-	**Door** TCP/IP Modbus communication port. Port 502 for example	0 … 65535	502	num	**3**
13.016 - IP1	**IP add 1st**	**15798**	WORD	-	**Ethernet IP address (part 1)**	0 … 255	10	num	**3**
13.017 - IP2	**IP add 2nd**	**15799**	WORD	-	**Ethernet IP address (part 2)**	0 …255	168	num	**3**

LABEL	LABEL	PAR. VALUE ADDRESS	DATA SIZE	CPL	DESCRIPTION	RANGE	DEFAULT	M.U.	LEVEL
13.018 - IP3	**IP add 3rd**	**15800**	WORD	-	**Ethernet IP address (part 3)**	0 … 255	0	num	**3**
13.019 - IP4	**IP add 4th**	**15801**	WORD	-	**Ethernet IP address (part 4)**	0 …255	2	num	**3**
13.020 - dF1	**Default gateway 1st**	**15802**	WORD	-	**Default Gateway (part 1)**	0 … 255	192	num	**3**
13.021 - dF2	**Default gateway 2nd**	**15803**	WORD	-	**Default Gateway (part 2)**	0 … 255	168	num	**3**
13.022 - dF3	**Default gateway 3rd**	**15804**	WORD	-	**Default Gateway (part 3)**	0 … 255	0	num	**3**
13.023 - dF4	**Default gateway 4th**	**15805**	WORD	-	**Default Gateway (part 4)**	0 … 255	1	num	**3**
13.024 - nE1	**Net mask 1st**	**15806**	WORD	-	**Net mask (part 1)**	0 … 255	255	num	**3**
13.025 - nE2	**Net mask 2nd**	**15807**	WORD	-	**Net mask (part 2)**	0 … 255	255	num	**3**
13.026 - nE3	**Net mask 3rd**	**15808**	WORD	-	**Net mask (part 3)**	0 … 255	255	num	**3**
13.027 - nE4	**Net mask 4th**	**15809**	WORD	-	**Net mask (part 4)**	0 … 255	0	num	**3**
13.028 - Pd1	**Primary DNS serv.1st**	**15810**	WORD	-	**Primary DNS server (part 1)**	0 … 255	8	num	**3**
13.029 - Pd2	**Primary DNS serv.2nd**	**15811**	WORD	-	**Primary DNS server (part 2)**	0 … 255	8	num	**3**
13.030 - Pd3	**Primary DNS serv.3rd**	**15812**	WORD	-	**Primary DNS server (part 3)**	0 … 255	8	num	**3**
13.031 - Pd4	**Primary DNS serv.4th**	**15813**	WORD	-	**Primary DNS server (part 4)**	0 … 255	8	num	**3**
13.032 - Sd1	**Second. DNS serv.1st**	**15814**	WORD	-	**Secondary DNS server (part 1)**	0 … 255	8	num	**3**
13.033 - Sd2	**Second. DNS serv.2nd**	**15815**	WORD	-	**Secondary DNS server (part 2)**	0 … 255	8	num	**3**
13.034 - Sd3	**Second. DNS serv.3rd**	**15816**	WORD	-	**Secondary DNS server (part 3)**	0 … 255	4	num	**3**
13.035 - Sd4	**Second. DNS serv.4th**	**15817**	WORD	-	**Secondary DNS server (part 4)**	0 … 255	4	num	**3**
13.036 - dHE	**Enable DHCP**	**15818**	WORD	-	**Enable DHCP** 0 = False, 1=True	0, 1	0	flag	**3**

8.1.3. | 3-1 System

LABEL	LABEL	PAR. VALUE ADDRESS	DATA SIZE	CPL	DESCRIPTION	RANGE	DEFAULT	M.U.	LEVEL
3-1 System					01.002-SbP =1,2->bar | 01.002-SbP =3,4->psi				
01.001 - LA	**Language**	**15819**	WORD	-	Language selection • 0 = English • 1 = Italian • 2 = French • 3 = Spanish • 4 = German • 5 = Russian • 6 = Turkish • 7 = Portuguese	0...7	0	num	**0**
01.002 - SbP	**Press. unit**	**16385**	WORD	-	Unit of pressure measurement: 1=bar, 2=°C, 3=psi, 4=°F	1...4	1	num	**0**
01.003 - LFr	**Line frequency**	**16964**	WORD	-	Line frequency 0=50 Hz, 1=60 Hz	0...1	0	flag	**3**
01.004 - Ert	**Select refrigerant type**	**16963**	WORD	-	Select refrigerant type 2 = CO2	2...2	2	flag	**3**
01.005 - rot	**Compressors policy**	**17194**	WORD	-	Compressors activation policy 0 = fixed sequence; 1 = rotation of compressors	0...1	1	flag	**2**
01.006 - rSE	**Machine room set**	**17980**	WORD	-1	Engine room temperature set	-200.0... 800.0	0.0	°C/°F	**2**
01.007 - rdi	**Machine room diff.**	**17983**	WORD	-1	Engine room temperature differential	-200.0... 800.0	0.0	°C/°F	**2**
01.008 - ECS	**Elec. cabinet set**	**17981**	WORD	-1	Electrical cabinet temperature set	-200.0... 800.0	0.0	°C/°F	**2**
01.009 - ECd	**Elec. cabinet diff.**	**17982**	WORD	-1	Electrical cabinet temperature differential	-200.0... 800.0	0.0	°C/°F	**2**
01.010 - Att	**Alarm threshold**	**17196**	WORD	-	Alarms mode (absolute or relative) 0=absolute, 1=relative to setpoint	0...1	0	flag	**0**
01.011 - En	**Number of expansions**	**16965**	WORD	-	IO expansion modules number 0= no expansion	0...12	0	num	**3**
01.012 - tr1	**GP reg. 1 mode**	**18072**	WORD	-	General purpose regulator GP 1 cool/heat mode 0=cold, 1=hot	0...1	0	flag	**2**
01.013 - Sr1	**GP reg. 1 set**	**18076**	WORD	-1	Regulator 1 setpoint	-200.0... 800.0	0.0	°C/°F	**2**

LABEL	LABEL	PAR. VALUE ADDRESS	DATA SIZE	CPL	DESCRIPTION	RANGE	DEFAULT	M.U.	LEVEL
01.014 - dr1	**GP reg. 1 diff.**	**18080**	WORD	-1	Regulator 1 differential	-200.0... 800.0	0.0	°C/°F	**2**
01.015 - tr2	**GP reg. 2 mode**	**18073**	WORD	-	General purpose regulator GP 2 cool/heat mode 0=cold, 1=hot	0...1	0	flag	**2**
01.016 - Sr2	**GP reg. 2 set**	**18077**	WORD	-1	Regulator 2 setpoint	-200.0... 800.0	0.0	°C/°F	**2**
01.017 - dr2	**GP reg. 2 diff.**	**18081**	WORD	-1	Regulator 2 differential	-200.0... 800.0	0.0	°C/°F	**2**
01.018 - tr3	**GP reg. 3 mode**	**18074**	WORD	-	General purpose regulator GP 3 cool/heat mode 0=cold, 1=hot	0...1	0	flag	**2**
01.019 - Sr3	**GP reg. 3 set**	**18078**	WORD	-1	Regulator 3 setpoint	-200.0... 800.0	0.0	°C/°F	**2**
01.020 - dr3	**GP reg. 3 diff.**	**18082**	WORD	-1	Regulator 3 differential	-200.0... 800.0	0.0	°C/°F	**2**
01.021 - tr4	**GP reg. 4 mode**	**18075**	WORD	-	General purpose regulator GP 4 cool/heat mode 0=cold, 1=hot	0...1	0	flag	**2**
01.022 - Sr4	**GP reg. 4 set**	**18079**	WORD	-1	Regulator 4 setpoint	-200.0... 800.0	0.0	°C/°F	**2**
01.023 - dr4	**GP reg. 4 diff.**	**18083**	WORD	-1	Regulator 4 differential	-200.0... 800.0	0.0	°C/°F	**2**
01.024 - Syt	**Valve synchr. time**	**17838**	WORD	-1	Duration of valve synchronization	-200.0... 800.0	0.0	s	**3**

8.1.4. | 3-2 Low Temp

LABEL	LABEL	PAR. VALUE ADDRESS	DATA SIZE	CPL	DESCRIPTION	RANGE	DEFAULT	M.U.	LEVEL
3-2-1 Compressors									
02.001 - LCn	**Num. of compressors**	**17097**	WORD	-	LT line compressors number. Total number of LT line compressors digital + inverter	0...8	2	num	**3**
02.002 - LrP	**Compr. rated power**	**16536**	WORD	-	LT line compressor rated power	0...65535	100	num	**3**

LABEL	LABEL	PAR. VALUE ADDRESS	DATA SIZE	CPL	DESCRIPTION	RANGE	DEFAULT	M.U.	LEVEL
02.003 - Lon	**Compr. on-on time**	**17099**	WORD	-	LT line compressor on-on time. Minimum time, between turning the same compressor on twice.	0...999	120	s	**2**
02.004 - LnF	**Compr. on-off time**	**17837**	WORD	-	LT line compressor on-off time. Minimum compressor operating time before being turned off. The 'called' compressor stays on at least for the time set by this parameter.	0...3600	15	s	**2**
02.005 - LoF	**Compr. off-on time**	**17100**	WORD	-	LT line compressor off-on time. Minimum time, between turning the same compressor off and back on again.	0...999	30	s	**2**
02.006 - Lin	**Compr.step inc delay**	**17805**	WORD	-	LT line compressors interstep time On Delay time between the calls of two different steps.	0...3600	30	s	**2**
02.007 - LdE	**Compr.step dec delay**	**17806**	WORD	-	LT line compressors interstep time Off Delay time between switching off two different steps.	0...3600	20	s	**2**
02.008 - LSd	**Shutdown time**	**17807**	WORD	-	Shutdown time LT line.	0...3600	20	s	**2**
02.009 - LPr	**Out error perc.**	**16530**	WORD	-	LT line % power when suction probe is in error.	0...100	0	%	**2**
02.010 - LPH	**Max out perc.**	**18000**	WORD	-	LT line power limitation %	0...100	0	%	**2**
3-2-2 Regulation					01.002-SbP =1,2->bar | 01.002-SbP =3,4->psi				
02.011 - LSt	**Set**	**16510**	WORD	-1	LT line regulation set	LLS...LHS	13.0	bar/psi	**1**
		16511	WORD	-1		LLS...LHS	-30.4	°C/°F	
02.012 - LLS	**Set min value**	**16512**	WORD	-1	LT line set min value.	-1.0...LHS	0	bar/psi	**2**
		16513	WORD	-1		-200.0...HHS	-8.43	°C/°F	
02.013 - LHS	**Set max value**	**16514**	WORD	-1	LT line set max value.	LLS...160.0	160.0	bar/psi	**2**
		16515	WORD	-1		LLS...800.0	130.6	°C/°F	

LABEL	LABEL	PAR. VALUE ADDRESS	DATA SIZE	CPL	DESCRIPTION	RANGE	DEFAULT	M.U.	LEVEL
02.014 - LbP	**Proportional band**	**16516**	WORD	-1	LT line proportional band.	0.0.0...160.0.0	0.5	bar/psi	**2**
		16517	WORD	-1		0.0.0...800.0.0	1.1	°C/°F	
02.015 - Ldb	**Dead band**	**16518**	WORD	-1	LT line dead band.	0.0.0...160.0.0	0	bar/psi	**2**
		16519	WORD	-1		0.0.0...800.0.0	0.0	°C/°F	
02.016 - Li	**Integral coeff.**	**16520**	WORD	-	LT line integral factor.	0...65535	200	num	**2**
02.017 - Ld	**Derivative coeff.**	**16521**	WORD	-	LT line derivative factor.	0...65535	0	num	**2**
02.018 - Lod	**Offset from DI**	**16689**	WORD	-1	LT line economy offset from digital input See digital input 12.064 - i05	-1.0...160.0	5.0	bar/psi	**2**
		16704	WORD	-1		-200.0...800.0	9.4	°C/°F	
02.019 - LoS	**Offset from schedul.**	**16707**	WORD	-1	LT line economy offset from scheduler	-1.0...160.0	6.0	bar/psi	**2**
		16708	WORD	-1		-200.0...800.0	11.1	°C/°F	
02.020 - LLo	**Offset min value**	**16709**	WORD	-1	LT line economy offset min value from supervisor	-1.0...160.0	5.0	bar/psi	**2**
		16714	WORD	-1		-200.0...800.0	12.3	°C/°F	**2**
02.021 - LHo	**Offset max value**	**16715**	WORD	-1	LT line economy offset max value from supervisor	-1.0...160.0	5.0	bar/psi	**2**
		16722	WORD	-1		-200.0...800.0	9.4	°C/°F	**2**
3-2-3 Inverter					01.002-SbP =1,2->bar | 01.002-SbP =3,4->psi				
02.022 - inL	**Num. of inverters**	**16525**	WORD	-	LT line inverters number.	0...1	1	num	**3**
02.023 - LLF	**Inv. min freq.**	**16532**	WORD	-	LT line inverter min frequency.	0...200	30	Hz	**3**
02.024 - LHF	**Inv. max freq.**	**16533**	WORD	-	LT line inverter max frequency.	0...200	60	Hz	**3**
02.025 - LiL	**Voltage min**	**16873**	WORD	-	LT line inverter min driving voltage	0...10.00	0.00	V	**3**
02.026 - LiH	**Voltage max**	**16879**	WORD	-	LT line inverter max driving voltage	0...10.00	10.00	V	**3**
02.027 - LiP	**Inv. rated power**	**16534**	WORD	-	LT line inverter rated power.	0...65535	100	num	**3**
02.028 - Lir	**Inv. regulation mode**	**16527**	WORD	-	LT line inverters mode. 0=immediately, 1=after period set in 02.034 - LiE at 100% power.	0...1	0	num	**3**
02.029 - LSS	**Inv. % var. near set**	**16528**	WORD	-	LT line % inverter variation near set	0...100	3	%	**3**
02.030 - LSF	**Inv. % var. far set**	**16529**	WORD	-	LT line % inverter variation far from set	0...100	8	%	**3**
02.031 - Lit	**Inv. off threshold**	**16531**	WORD	-1	LT line compressors shutdown threshold	-1.0...160.0	11.0	bar/psi	**3**
		16532	WORD	-1		-200.0... 800.0	-34.9	°C/°F	**3**
02.032 - LSP	**Inverter start %**	**17808**	WORD	-	LT line inverter start %.	0...100	1	%	**3**
02.033 - LiS	**Inverter start time**	**17809**	WORD	-	LT line inverter start time.	0...3600	30	s	**3**

LABEL	LABEL	PAR. VALUE ADDRESS	DATA SIZE	CPL	DESCRIPTION	RANGE	DEFAULT	M.U.	LEVEL
02.034 - LiE	**Inverter reg. period**	**17843**	WORD	-	LT line inverter timeout 1% (shutdown) or 100% (step activation)	0...3600	10	s	**3**

8.1.5. | 3-3 High Temp

LABEL	LABEL	PAR. VALUE ADDRESS	DATA SIZE	CPL	DESCRIPTION	RANGE	DEFAULT	M.U.	LEVEL
03.001 - HCn	**Num. of compressors**	**17098**	WORD	-	HT line compressors number.	0...8	3	num	**3**
03.002 - HrP	**Compr. rated power**	**16569**	WORD	-	HT line compressor rated power.	0...65535	100	num	**3**
03.003 - Hon	**Compr. on-on time**	**17103**	WORD	-	HT line compressor on-on time. Minimum time, in minutes, between turning the same compressor on twice.	0...999	120	s	**2**
03.004 - HnF	**Compr. on-off time**	**17836**	WORD	-	HT line compressor on-off time. Minimum compressor operating time before being turned off. The 'called' compressor stays on at least for the time set by this parameter.	0...3600	20	s	**2**
03.005 - HoF	**Compr. off-on time**	**17104**	WORD	-	HT line compressor off-on time. Minimum time, in minutes, between turning the same compressor off and back on again.	0...3600	30	s	**2**
03.006 - Hin	**Compr.step inc delay**	**17811**	WORD	-	HT line compressors interstep time On Delay time between the calls of two different steps.	0...3600	30	s	**2**
03.007 - Hde	**Compr.step dec delay**	**17812**	WORD	-	HT line compressors interstep time Off Delay time between switching off two different steps.	0...3600	20	s	**2**
03.008 - HSd	**Shutdown time**	**17813**	WORD	-	Shutdown time HT line.	0...3600	15	s	**2**
03.009 - HPr	**Out error perc.**	**16557**	WORD	-	HT line % power when suction probe is in error.	0...100	0	%	**2**
03.010 - HPH	**Max out perc.**	**17999**	WORD	-	HT line power limitation %	0...100	0	%	**2**

LABEL	LABEL	PAR. VALUE ADDRESS	DATA SIZE	CPL	DESCRIPTION	RANGE	DEFAULT	M.U.	LEVEL
3-3-2 Regulation					01.002-SbP =1,2->bar | 01.002-SbP =3,4->psi				
03.011 - HSt	**Set**	**16537**	WORD	-1	HT line regulation set	HLS...HHS	25.0	bar/psi	**1**
		16538	WORD	-1		HLS...HHS	-10.4	°C/°F	
03.012 - HLS	**Set min value**	**16539**	WORD	-1	HT line set min value.	-1.0...HHS	20.0	bar/psi	**2**
		16540	WORD	-1		-200.0...HHS	-17.7	°C/°F	
03.013 - HHS	**Set max value**	**16541**	WORD	-1	HT line set max value.	HLS...160.0	40.0	bar/psi	**2**
		16542	WORD	-1		HLS...800.0	6.4	°C/°F	
03.014 - HbP	**Proportional band**	**16543**	WORD	-1	HT line proportional band.	0.0.0...160.0.0	0.0	bar/psi	**2**
		16544	WORD	-1		0.0.0...800.0.0	0.0	°C/°F	
03.015 - Hdb	**Dead band**	**16545**	WORD	-1	HT line dead band.	0.0.0...160.0.0	0.0	bar/psi	**2**
		16546	WORD	-1		0.0.0...800.0.0	0.0	°C/°F	
03.016 - Hi	**Integral coeff.**	**16547**	WORD	-	HT line integral factor.	0...65535	400	num	**2**
03.017 - Hd	**Derivative coeff.**	**16548**	WORD	-	HT line derivative factor.	0...65535	0	num	**2**
03.018 - Hod	**Offset from DI**	**16447**	WORD	-1	HT line economy offset from digital input 12.064 - i05	-1.0...160.0	7.0	bar/psi	**2**
		16448	WORD	-1		-200.0...800.0	8.6	°C/°F	**2**
03.019 - HoS	**Offset from schedul.**	**16552**	WORD	-1	HT line economy offset from scheduler	-1.0...160.0	8.0	bar/psi	**2**
		16688	WORD	-1		-200.0...800.0	9.7	°C/°F	**2**
03.020 - HLo	**Offset min value**	**16723**	WORD	-1	HT line economy offset min value from supervisor	-1.0...160.0	5.0	bar/psi	**2**
		16730	WORD	-1		-200.0...800.0	7.3	°C/°F	**2**
03.021 - HHo	**Offset max value**	**16731**	WORD	-1	HT line economy offset max value from supervisor	-1.0...160.0	5.0	bar/psi	**2**
		16738	WORD	-1		-200.0...800.0	6.3	°C/°F	**2**
03.022 - Hdt	**HG dump start thres.**	**18020**	WORD	-1	Hot gas dump start threshold. Pressure dump start threshold	-200.0...800.0	8.0	°C/°F	**2**
03.023 - HdS	**HG dump stop thres.**	**18021**	WORD	-1	Hot gas dump stop threshold. Pressure dump stop threshold	-200.0...800.0	10.0	°C/°F	**2**
03.024 - int	**Liquid inject. mode**	**18015**	WORD	-	Liquid injection mode. 0=disabled 1=Superheat 2=discharge 3=Superheat + discharge	0...3	0	num	**2**
03.027 - ith	**Liquid inj.SH thres.**	**18016**	WORD	-1	Liquid injection superheat threshold.	-200.0...800.0	0.0	°C/°F	**2**
03.028 - idi	**Liquid inj.SH diff.**	**18017**	WORD	-1	Liquid injection superheat differential.	-200.0...800.0	0.0	°C/°F	**2**
03.029 - idt	**Liquid inj.disc.thr.**	**18018**	WORD	-1	Liquid injection discharge temperature threshold.	-200.0...800.0	0.0	°C/°F	**2**

LABEL	LABEL	PAR. VALUE ADDRESS	DATA SIZE	CPL	DESCRIPTION	RANGE	DEFAULT	M.U.	LEVEL
03.030 - idd	**Liquid inj.disc.diff**	**18019**	WORD	-1	Liquid injection discharge temperature differential.	-200.0...800.0	0.0	°C/°F	**2**
03.031 - iot	**Liquid inj. on t.out**	**18028**	WORD	-	Liquid injection on timeout.	0...999	0	s	**2**
03.032 - iFt	**Liquid inj.off t.out**	**18029**	WORD	-	Liquid injection off timeout.	0...999	0	s	**2**
03.033 - iHr	**Liquid inj.max retr.**	**18030**	WORD	-	Liquid injection on off cycles max number. Valve forced off when this number is exceeded	0...255	0	num	**2**
3-3-3 Inverter					01.002-SbP =1,2->bar | 01.002-SbP =3,4->psi				
03.034 - inH	**Num. of inverters**	**16553**	WORD	-	HT line inverters number.	0...1	1	num	**3**
03.035 - HLF	**Inv. min freq.**	**16566**	WORD	-	HT line inverter min frequency.	0...200	30	Hz	**3**
03.036 - HHF	**Inv. max freq.**	**16567**	WORD	-	HT line inverter max frequency.	0...200	60	Hz	**3**
03.037 - HiL	**Voltage min**	**16875**	WORD	-	HT line inverter min driving voltage	0.00...10.00	0.00	Volt	**3**
03.038 - HiH	**Voltage max**	**16880**	WORD	-	HT line inverter max driving voltage	0.00...10.00	10.00	Volt	**3**
03.039 - HiP	**Inv. rated power**	**16568**	WORD	-	HT line inverter rated power.	0...65535	100	Hz	**3**
03.040 - Hir	**Inv. regulation mode**	**16554**	WORD	-	HT line inverter mode.	0...100	0	num	**3**
03.041 - HSS	**Inv. % var. near set**	**16555**	WORD	-	HT line % inverter variation near set	0...100	3	%	**3**
03.042 - HSF	**Inv. % var. far set**	**16556**	WORD	-	HT line % inverter variation far from set	0...100	8	%	**3**
03.043 - Hit	**Inv. off threshold**	**16558**	WORD	-1	HT line compressors shutdown threshold	-200.0...800.0	22.0	bar/psi	**3**
		16559	WORD	-1		-1.0...160.0	-14.7	°C/°F	
03.044 - HSP	**Inverter start %**	**17814**	WORD	-	HT line inverter start %.	0...100	1	%	**3**
03.045 - HiS	**Inverter start time**	**17815**	WORD	-	HT line inverter start time.	0...3600	30	s	**3**
03.046 - HiE	**Inverter reg. period**	**17844**	WORD	-	HT line inverter timeout 1% (shutdown) or 100% (step activation)	0...3600	10	s	**3**

8.1.6. | 3-4 High Pressure

LABEL	LABEL	PAR. VALUE ADDRESS	DATA SIZE	CPL	DESCRIPTION	RANGE	DEFAULT	M.U.	LEVEL
8.1.6.1. 3-4 High Pressure					01.002-SbP =1,2->bar | 01.002-SbP =3,4->psi				
04.001 - Ut1	**Temperature point 1**	**16386**	WORD	-1	Temperature point 1 segment T/P temp.	-200.0...800.0	0.0	°C/°F	**3**
04.002 - Ut2	**Temperature point 2**	**16387**	WORD	-1	Temperature point 2 segment T/P temp.	-200.0...800.0	0.0	°C/°F	**3**
04.003 - Ut3	**Temperature point 3**	**16388**	WORD	-1	Temperature point 3 segment T/P temp.	-200.0...800.0	0.0	°C/°F	**3**
04.004 - UP1	**Pressure point 1**	**16389**	WORD	-1	Pressure point 1 segment T/P temp.	-1.0...160.0	0.0	bar/ psi	**3**
04.005 - UP2	**Pressure point 2**	**16390**	WORD	-1	Pressure point 2 segment T/P temp.	-1.0...160.0	0.0	bar/ psi	**3**
04.006 - UP3	**Pressure point 3**	**16391**	WORD	-1	Pressure point 3 segment T/P temp.	-1.0...160.0	0.0	bar/ psi	**3**
04.007 - UCS	**Curve selection**	**16392**	WORD	-	Transcritical linearization curve selection. 0 =Eliwell curve, 1 = custom curve.	0...1	0	num	**3**
04.008 - ULS	**Set min value**	**16393**	WORD	-1	HP set min value.	-1...UHS	0.0	bar/ psi	**2**
04.009 - UHS	**Set max value**	**16394**	WORD	-1	HP set max value.	ULS...160	100.	bar/ psi	**2**
04.010 - USL	**HP min. set**	**17816**	WORD	-1	HP min set.	-1.0...160.0	45.0	bar/ psi	**2**
04.011 - USH	**HP max. set**	**17817**	WORD	-1	HP max set.	-1.0...160.0	95.0	bar/ psi	**2**
04.012 - UrE	**Refer.temp.at 100bar**	**17818**	WORD	-1	Reference temperature at 100 bar/psi.	-200.0...800.0	39.0	°C/°F	**2**
04.013 - UoH	**Offset max**	**17829**	WORD	-1	HP offset max.	-1.0...160.0	0.0	bar/ psi	**2**
04.014 - UoL	**Offset min**	**17830**	WORD	-1	HP offset min.	-1.0...160.0	0.0	bar/ psi	**2**
04.015 - Uot	**Offset time**	**17831**	WORD	-	HP delay offset activation.	0...3600	0	s	**2**
04.016 - UrH	**Receiver hysteresis**	**17823**	WORD	-	HP receiver differential.	0.0...160.0	1.0	bar/ psi	**2**
04.017 - UHr	**Set min during HR**	**16395**	WORD	-1	HP min set during heat recovery at max power.	0.0...99.9	80.0	bar/ psi	**2**

LABEL	LABEL	PAR. VALUE ADDRESS	DATA SIZE	CPL	DESCRIPTION	RANGE	DEFAULT	M.U.	LEVEL
04.018 - UiS	**Max set incr. sub.**	**16396**	WORD	-	HP set max increasing speed in subcritical mode. Subcritical mode.	0.0...99.9	3.0	s	**2**
04.019 - UdS	**Max set decr. sub.**	**16397**	WORD	-	HP set max decreasing speed in subcritical mode.	0.0...99.9	3.0	s	**2**
04.020 - Uit	**Max set incr. trans.**	**16398**	WORD	-	HP set max increasing speed in transritical mode.	0.0...99.9	3.0	s	**2**
04.021 - Udt	**Max set decr. trans.**	**16399**	WORD	-	HP set max decreasing speed in transcritical mode.	0.0...99.9	3.0	s	**2**
04.022 - Ubp	**Proportional band**	**17819**	WORD	-1	HP proportional band.	0.0...160.0	10.0	bar/ psi	**2**
04.023 - Udb	**Dead band**	**17820**	WORD	-1	HP dead band.	0.0...160.0	0.1	bar/ psi	**2**
04.024 - Uti	**Integral time**	**16402**	WORD	-	HP regulator integral time.	0.0...90.0	2.0	s	**2**
04.025 - Utd	**Derivative time**	**16403**	WORD	-	HP regulator derivative time.	0.0...90.0	0.0	s	**2**
04.026 - ULP	**Min valve open. perc.**	**16408**	WORD	-	HP min valve opening percentage	0...100	10	%	**2**
04.027 - UHP	**Max valve open. perc.**	**16406**	WORD	-	HP max valve opening percentage	0...100	85	%	**2**
04.028 - UPr	**Out error perc.**	**18001**	WORD	-	HP valve % if HP probe error. If = 0 plant shutdown.	0...100	0	%	**2**
04.029 - UCt	**Subcool.temp. subcr.**	**16413**	WORD	-1	Subcooling temperature in subcritical mode.	-200.0...800.0	6.0	°C/°F	**2**
04.030 - USt	**Subcritical thresh.**	**16414**	WORD	-1	Subcritical mode activation threshold temperature.	-200.0...800.0	26.0	°C/°F	**2**
04.031 - Utt	**Transcritical thresh.**	**16415**	WORD	-1	Transcritical mode activation threshold temperature.	-200.0...800.0	29.0	°C/°F	**2**
04.032 - Udd	**Deact. delay**	**18213**	WORD	-	HP valve deactivation delay after HT/PC line compressors disabling.	0...60	0	s	**2**
04.033-UEH	**HP high P managem.**	**16705**	WORD		HP valve management 0 = Inactive 1 = HP Valve modulation active if HP pressure is very high	0...1	0	num	**2**

LABEL	LABEL	PAR. VALUE ADDRESS	DATA SIZE	CPL	DESCRIPTION	RANGE	DEFAULT	M.U.	LEVEL
04.034-USC	**HP valve management**	**16746**	WORD		HP valve management selection 0=AO,1=485	0...1	0	num	**2**
04.035-UAt	**HP valve active. Mode**	**16706**	WORD		0=on if compressor on, 1=on if compressor or fan on	0...1	0	num	**2**
04.036-USP	**PID out max variat.**	**16404**	WORD		Maximum HP PID variation	0...100	0	%	**2**

8.1.7. | 3-5 Gas Cooler

LABEL	LABEL	PAR. VALUE ADDRESS	DATA SIZE	CPL	DESCRIPTION	RANGE	DEFAULT	M.U.	LEVEL
3-5-1 Regulation					01.002-SbP =1,2->bar | 01.002-SbP =3,4->psi				
05.001 - FPC	**Probe selection**	**17143**	WORD	-	Gascooler probe selection 0=Gascooler regulation (19P) / HP set point computation (19P), 1=Gascooler regulation (20P) / HP set point computation (20P), 2=Gascooler regulation (19P) / HP set point computation (20P), 3=Gascooler regulation (20P) / HP set point computation (19P)	0...3	0	num	**3**
05.002 - FLS	**Min set**	**16417**	WORD	-1	Gascooler set min value.	-200.0...800.0	8.0	°C/°F	**2**
05.005 - SUt	**Offset subcritical**	**16430**	WORD	-1	External temperature offset for gascooler in subcritical mode.	-200.0...800.0	-0.5	°C/°F	**2**
05.006 - trt	**Offset transcritical**	**16431**	WORD	-1	External temperature offset for gascooler in transcritical mode.	-200.0...800.0	-2.0	°C/°F	**2**
05.007 - FbP	**Proportional band**	**17825**	WORD	-1	Gascooler proportional band.	0.0.0...800.0.0	5.0	°C/°F	**2**
05.008 - Fdb	**Dead band**	**17826**	WORD	-1	Gascooler dead band.	0.0.0...800.0.0	0.0	°C/°F	**2**
05.009 - Fti	**Integral time**	**16421**	WORD	-1	Fans PID integral time.	0.0...90.0	20.0	s	**2**
05.010 - Ftd	**Derivative time**	**16422**	WORD	-1	Fans PID derivative time.	0.0...90.0	0.0	s	**2**
05.011 - HPd	**PID max perc. day**	**16423**	WORD	-	Fans PID out max percentage day.	0...100	100	%	**2**
05.012 - HPn	**PID max perc. night**	**16424**	WORD	-	Fans PID out max percentage night.	0...100	100	%	**2**
05.013 - FPE	**Out error perc.**	**16425**	WORD	-	Fans output percentage in case of probe error.	0...100	50	%	**2**
05.014 - FLP	**Min out perc.**	**16426**	WORD	-	Fans output minimum percentage.	0...100	0	%	**2**
05.015 - FdC	**Post fan time**	**16428**	WORD	-	Gascooler fans shutdown delay after compressor disabling.	0...999	1	min	**2**
05.016 - FPr	**Pre fan time**	**17827**	WORD	-	Gascooler pre-fan time	0...360	0	s	**2**
05.017 - FPP	**Pre fan perc.**	**17978**	WORD	-	Gascooler pre-fan %	0...100	50	%	**2**
05.018 - FHr	**Set during HR**	**17824**	WORD	-1	Gascooler set during heat recovery.	-200.0...800.0	5.0	°C/°F	**2**

LABEL	LABEL	PAR. VALUE ADDRESS	DATA SIZE	CPL	DESCRIPTION	RANGE	DEFAULT	M.U.	LEVEL
05.019 - FSP	**PID max variation**	**17979**	WORD	-	Gascooler PID regulator max percentage change.	0...100	10	%	**2**

8.1.8. | 3-6 Heat Recovery 1

LABEL	LABEL	PAR. VALUE ADDRESS	DATA SIZE	CPL	DESCRIPTION	RANGE	DEFAULT	M.U.	LEVEL
8.1.8.1. 3-6 Heat Recovery 1					01.002-SbP =1,2->bar | 01.002-SbP =3,4->psi				
06.001 - r1tY	**Regulation mode**	**16465**	WORD	-	Heat recovery 1 mode • 0 = HR1 disabled • 1 = one probe • 2 = two probes	0...2	0	num	**3**
06.002 - r1P1	**Boiler probe 1**	**16503**	WORD	-	Heat recovery 1 boiler probe 1 • 0 = disabled • 1 = top • 2 = middle • 3 = bottom	0...3	1	num	**3**
06.003 - r1P2	**Boiler probe 2**	**16504**	WORD	-	Heat recovery 1 boiler probe 2 See **06.002 - r1P1**	0...3	3	num	**3**
06.004 - r1CS	**CO2 inlet start temp**	**16466**	WORD	-1	Heat recovery 1 inlet CO2 activation temperature.	-200.0...800.0	0.0	°C/°F	**2**
06.005 - r1CF	**CO2 inlet stop temp**	**16467**	WORD	-1	Heat recovery 1 inlet CO2 deactivation temperature.	-200.0...800.0	0	°C/°F	**2**
06.006 - r1HS	**H2O start temp**	**16468**	WORD	-1	Heat recovery 1 boiler activation water temperature.	-200.0...800.0	50.0	°C/°F	**2**
06.007 - r1HF	**H2O stop temp**	**16469**	WORD	-1	Heat recovery 1 boiler deactivation water temperature.	-200.0...800.0	70.0	°C/°F	**2**
06.008 - r1SH	**H2O temp set max pow**	**16470**	WORD	-1	Heat recovery 1 boiler water temperature to activate max power.	-200.0...800.0	24.0	°C/°F	**2**
06.009 - r1dH	**H2O temp dif max pow**	**16471**	WORD	-1	Heat recovery 1 boiler water differential temperature to activate max power.	0.0...800.0	1.0	°C/°F	**2**
06.010 - r1dL	**H2O min delta temp**	**16472**	WORD	-1	Heat recovery 1 exchanger min differential water temperature.	0.0...800.0	0.0	°C/°F	**2**
06.011 - r1SL	**H2O inlet min temp**	**16480**	WORD	-1	Heat recovery 1 inlet mixing valve min water temperature.	-200.0...800.0	0.0	°C/°F	**2**

LABEL	LABEL	PAR. VALUE ADDRESS	DATA SIZE	CPL	DESCRIPTION	RANGE	DEFAULT	M.U.	LEVEL
06.012 - r1HL	**H2O in/out min diff**	**16576**	WORD	-1	Heat recovery 1 min inlet/outlet water temperature differential.	0.0...800.0	0.0	°C/°F	**2**
06.013- r1Pb	**Proportional band**	**16475**	WORD	-1	Heat recovery 1 proportional band.	0.0...800.0	0.5	°C/°F	**2**
06.014 - r1db	**Dead band**	**16476**	WORD	-1	Heat recovery 1 dead band.	0.0...800.0	0.0	°C/°F	**2**
06.015 - r1ti	**Integral time**	**16477**	WORD	-	Heat recovery 1 integral time.	0.0...900.0	0.0	s	**2**
06.016 - r1td	**Derivative time**	**16478**	WORD	-1	Heat recovery 1 derivative time.	0.0...90.0	0.0	s	**2**
06.017 - r1Ld	**Min temp. wait. time**	**16473**	WORD	-	Heat recovery 1 exchanger waiting time min water temperature differential.	0...999	0	s	**2**
06.018 - r1ot	**On/off time**	**16474**	WORD	-	Heat recovery 1 exchanger activation/deactivation time.	0...999	300	s	**2**
06.019 - r1SP	**PID max variation**	**16479**	WORD	-	Heat recovery 1 PID max variation.	0...100	1	%	**2**
06.020 - r1LP	**Min out perc.**	**16481**	WORD	-	Heat recovery 1 min %.	0...100	0	%	**2**
06.021 - r1HP	**Max out perc.**	**16482**	WORD	-	Heat recovery 1 max %.	0...100	100	%	**2**
06.022 - r1Lt	**Min difference time**	**16577**	WORD	-	Heat recovery 2 inlet/outlet water temperature difference min duration	0...999	0	s	**2**
06.023 - r1rC	**Reverse valve contr.**	**17972**	WORD	-	Heat recovery 1 reverse valve control 0= direct mode, 0% to 100% 1= inverse mode, 100% to 0%.	0...1	0	flag	**2**

8.1.9. | 3-7 Heat Recovery 2

LABEL	LABEL	PAR. VALUE ADDRESS	DATA SIZE	CPL	DESCRIPTION	RANGE	DEFAULT	M.U.	LEVEL
8.1.9.1. 3-7 Heat Recovery 2					01.002-SbP =1,2->bar | 01.002-SbP =3,4->psi				
07.001 - r2tY	**Regulation mode**	**16484**	WORD	-	Heat recovery 2 mode • 0 = HR2 disabled • 1 = one probe • 2 = two probes	0...2	0	num	**3**
07.002 - r2P1	**Boiler probe 1**	**16505**	WORD	-	Heat recovery 2 boiler probe 1 • 0 = disabled • 1 = top • 2 = middle • 3 = bottom	0...3	1	num	**3**
07.003 - r2P2	**Boiler probe 2**	**16506**	WORD	-	Heat recovery 1 boiler probe 2 See **06.002 - r1P1**	0...3	3	num	**3**
07.004 - r2CS	**CO2 inlet start temp**	**16485**	WORD	-1	Heat recovery 2 inlet CO2 activation temperature.	-200.0...800.0	0.0	°C/°F	**2**
07.005 - r2CF	**CO2 inlet stop temp**	**16486**	WORD	-1	Heat recovery 2 inlet CO2 deactivation temperature.	-200.0...800.0	0.0	°C/°F	**2**
07.006 - r2HS	**H2O start temp**	**16487**	WORD	-1	Heat recovery 2 boiler activation water temperature.	-200.0...800.0	0.0	°C/°F	**2**
07.007 - r2HF	**H2O stop temp**	**16488**	WORD	-1	Heat recovery 2 boiler deactivation water temperature.	-200.0...800.0	0.0	°C/°F	**2**
07.008 - r2SH	**H2O temp set max pow**	**16489**	WORD	-1	Heat recovery 2 boiler water temperature to activate max power.	-200.0...800.0	0.0	°C/°F	**2**
07.009 - r2dH	**H2O temp dif max pow**	**16490**	WORD	-1	Heat recovery 2 boiler water differential temperature to activate max power.	0.0...800.0	0.0	°C/°F	**2**
07.010 - r2dL	**H2O min delta temp**	**16491**	WORD	-1	Heat recovery 2 exchanger min differential water temperature.	0.0...800.0	0.0	°C/°F	**2**
07.011 - r2SL	**H2O inlet min temp**	**16499**	WORD	-1	Heat recovery 2 inlet mixing valve min water temperature.	-200.0...800.0	0.0	°C/°F	**2**
07.012 - r2HL	**H2O in/out min diff**	**16579**	WORD	-1	Heat recovery 2 min difference between outlet and inlet water temperature.	0.0...800.0	0.0	°C/°F	**2**
07.013 - r2Pb	**Proportional band**	**16494**	WORD	-1	Heat recovery 2 proportional band.	0.0...800.0	0.0	°C/°F	**2**
07.014 - r2db	**Dead band**	**16495**	WORD	-1	Heat recovery 2 dead band.	0.0...800.0	0.0	°C/°F	**2**
07.015 - r2ti	**Integral time**	**16496**	WORD	-1	Heat recovery 2 integral time.	0.0...900.0	0.0	s	**2**
07.016 - r2td	**Derivative time**	**16497**	WORD	-1	Heat recovery 2 derivative time.	0.0...90.0	0.0	s	**2**
07.017 - r2Ld	**Min temp. wait. time**	**16492**	WORD	-	Heat recovery 2 exchanger waiting time min diff. temp. water side.	0...999	0	s	**2**

LABEL	LABEL	PAR. VALUE ADDRESS	DATA SIZE	CPL	DESCRIPTION	RANGE	DEFAULT	M.U.	LEVEL
07.018 - r2ot	**On/off time**	**16493**	WORD	-	Heat recovery 2 exchanger activation/deactivation time.	0...999	0	s	**2**
07.019 - r2SP	**PID max variation**	**16498**	WORD	-	Heat recovery 2 PID max variation.	0...100	0	%	**2**
07.020 - r2LP	**Min out perc.**	**16500**	WORD	-	Heat recovery 2 min %.	0...100	0	%	**2**
07.021 - r2HP	**Max out perc.**	**16501**	WORD	-	Heat recovery 2 max %.	0...100	0	%	**2**
07.022 - r2Lt	**Min difference time**	**16580**	WORD	-	Heat recovery 2 inlet/outlet water temperature difference min duration	0...999	0	s	**2**
07.023 - r2rC	**Reverse valve contr.**	**17973**	WORD	-	Heat recovery 2 reverse valve control 0= direct mode, 0% to 100% 1= inverse mode, 100% to 0%.	0...1	0	flag	**2**

8.1.9.2. 3-8 Receiver

LABEL	LABEL	PAR. VALUE ADDRESS	DATA SIZE	CPL	DESCRIPTION	RANGE	DEFAULT	M.U.	LEVEL
3-8-1 Flash Gas Valve					01.002-SbP =1,2->bar | 01.002-SbP =3,4->psi				
08.001 - rSt	**Set**	**16441**	WORD	-1	Receiver regulation set	-1.0...160.0	35.0	bar/psi	**2**
08.002 - rHS	**PID max variation**	**16457**	WORD	-	Receiver PID out max variation.	0...100	5	%	**2**
08.003 - rPr	**Out error perc.**	**16460**	WORD	-	Receiver % power when suction probe is in error.	0...100	0	%	**2**
08.004 - rPL	**Min valve open. perc.**	**16461**	WORD	-	Receiver opening valve min %.	0...100	0	%	**2**
08.005 - rPH	**Max valve open. perc.**	**16462**	WORD	-	Receiver opening valve max %.	0...100	100	%	**2**
08.006 - rLP	**Receiver min press.**	**16463**	WORD	-1	Receiver min pressure to force HP press valve opening.	-1.0...160.0	30.0	bar/psi	**2**
08.007 - rHP	**Receiver max press.**	**16464**	WORD	-1	Receiver max pressure to force HP press valve opening.	-1...800	38.0	bar/psi	**2**
08.008 - rPb	**Proportional band**	**16443**	WORD	-1	Receiver proportional band.	0.0...160.0	8.0	bar/psi	**2**
08.009 - rdb	**Dead band**	**16445**	WORD	-1	Receiver dead band-	0.0...160.0	0.1	bar/psi	**2**
08.010 - rti	**Integral time**	**16449**	WORD	-1	Receiver PID integral time	0.0...90.0	4.0	s	**2**
08.011 - rtd	**Derivative time**	**16450**	WORD	-.	Receiver PID derivative time	0.0...90.0	0.0	s	**2**
3-8-2 Parallel compr. 3-8-2-1 Compressors					01.002-SbP =1,2->bar | 01.002-SbP =3,4->psi				
08.012 - SCn	**ST num of compressor**	**18101**	WORD	-	PC line compressors number.	0...4	0	num	**3**
08.013 - SrP	**Compr. rated power**	**18102**	WORD	-	PC line compressor rated power.	0...65535	100	num	**3**
08.014 - Son	**Compr. on-on time**	**18055**	WORD	-	PC line compressor on-on time.	0...999	120	s	**2**
08.015 - SnF	**Compr. on-off time**	**18054**	WORD	-	PC line compressor on-off time.	0...999	15	s	**2**
08.016 - SoF	**Compr. off-on time**	**18053**	WORD	-	PC line compressor off-on time.	0...999	30	s	**2**
08.017 - Sin	**Compr.step inc delay**	**18042**	WORD	-	PC line interstep on time	0...999	30	s	**2**
08.018 - SdE	**Compr.step dec delay**	**18041**	WORD	-	PC line interstep off time	0...999	20	s	**2**
08.019 - SSd	**Shutdown time**	**18040**	WORD	-	Shutdown time PC line.	0...999	20	s	**2**
08.020 - SPr	**ST out error perc.**	**18032**	WORD	-	PC line % power if suction probe error.	0...100	0	%	**2**

LABEL	LABEL	PAR. VALUE ADDRESS	DATA SIZE	CPL	DESCRIPTION	RANGE	DEFAULT	M.U.	LEVEL
08.021 - SHP	**ST max out perc.**	**18048**	WORD	-	PC line power limitation %	0...100	0	%	**2**
3-8-2 Parallel compr. 3-8-2-2 Regulation									
08.001 - rSt	**Set**	**16441**	WORD	-1	Receiver regulation set	-1.0...160.0	35.0	bar/psi	**2**
08.022 - SPb	**ST proportional band**	**18045**	WORD	-1	PC line proportional band.	0.0...160.0	0.5	bar/psi	**2**
08.023 - Sdb	**ST dead band**	**18044**	WORD	-1	PC line dead band.	0.0...160.0	0	bar/psi	**2**
08.024 - Si	**ST integral coeff.**	**18047**	WORD	-	PC line integral factor.	0...65535	200	num	**2**
08.025 - Sd	**ST derivative coeff.**	**18046**	WORD	-	PC line derivative factor.	0...65535	0	num	**2**
08.026 - Sot	**FGV min % start ST**	**18292**	WORD	-	Flash gas min % to activate the PC line.	0...100	30	%	**2**
08.027 - Sod	**ST delay from FGV**	**18293**	WORD	-	PC activation delay after flash gas valve min %.	0...999	120.0	s	**2**
08.028 - SHt	**HP min pres.start ST**	**18294**	WORD	-1	HP pressure min value to activate PC.	-1.0...160.0	85.0	bar/psi	**2**
08.029 - SFt	**GC min temp.start ST**	**18295**	WORD	-1	Gascooler temperature min value to activate PC.	-20.0...800.0	40.0	bar/psi	**2**
08.030 - SoP	**FGV set offset**	**18296**	WORD	-1	Flash gas valve offset on PC active.	-1.0...160.0	2.0	bar/psi	**2**
3-8-2 Parallel compr. 3-8-2-3 Inverter					01.002-SbP =1,2->bar | 01.002-SbP =3,4->psi				
08.031 - inS	**Num. of inverters**	**18037**	WORD	-	PC line inverters number.	0...1	0	flag	**3**
08.032 - SLF	**Inv. min freq.**	**18105**	WORD	-	PC line inverter min frequency.	0...65535	30	(Hz)	**3**
08.033 - SHF	**Inv. max freq.**	**18104**	WORD	-	PC line inverter max frequency.	0...65535	60	(Hz)	**3**
08.034 - SiL	**Voltage min**	**16878**	WORD	-	PC line inverter min driving voltage	0.00...10.00	0.00	V	**3**
08.035 - SiH	**Voltage max**	**16881**	WORD	-	PC line inverter max driving voltage	0.00...10.00	10.00	V	**3**

LABEL	LABEL	PAR. VALUE ADDRESS	DATA SIZE	CPL	DESCRIPTION	RANGE	DEFAULT	M.U.	LEVEL
08.036 - SiP	**Inv. rated power**	**18103**	WORD	-	PC line inverter rated power.	0...65535	100	num	**3**
08.037 - Sir	**Inv. regulation mode**	**18035**	WORD	-	PC line inverter mode	0...65535	0	num	**3**
08.038 - SSS	**Inv. % var. near set**	**18039**	WORD	-	PC line % inverter variation near set	0...100	3	%	**3**
08.039 - SSF	**Inv. % var. far set**	**18038**	WORD	-	PC line % inverter variation far from set	0...100	8	%	**3**
08.040 - Sit	**Inv. off threshold**	**18043**	WORD	-1	PC line shutdown threshold	-1.0...160.0	34.00	bar/psi	**3**
08.041 - SSP	**Inverter start %**	**18034**	WORD	-	PC line inverter start %	0...100	1	%	**3**
08.042 - SiS	**Inverter start time**	**18033**	WORD	-	PC line inverter start time	0...999	30	s	**3**
08.043 - SiE	**Inverter reg. period**	**18036**	WORD	-	PC line inverter timeout 1% (shutdown) or 100% (step activation)	0...999	10	s	**3**

8.1.10. | 3-9 Heat Exchanger

LABEL	LABEL	PAR. VALUE ADDRESS	DATA SIZE	CPL	DESCRIPTION	RANGE	DEFAULT	M.U.	LEVEL
8.1.10.1. 3-9 Heat Exchanger					01.002-SbP =1,2->bar | 01.002-SbP =3,4->psi				
09.001 - HES	**HE setpoint**	**17833**	WORD	-1	Heat exchanger set.	-200.0...800.0	20.0	°C/°F	**2**
09.002 - HEP	**Proportional band**	**17834**	WORD	-1	Heat exchanger proportional band.	0.0...800.0	20.0	°C/°F	**2**
09.003 - HEb	**Dead band**	**17976**	WORD	-1	Heat exchanger dead band.	0.0...800.0	0.0	°C/°F	**2**
09.004 - HEi	**Integral time**	**17974**	WORD	-	Heat exchanger integral time.	0...65535	0	num	**2**
09.005 - HEd	**Derivative time**	**17975**	WORD	-	Heat exchanger derivative time.	0...65535	0	num	**2**

8.1.11. | 3-10 Oil

LABEL	LABEL	PAR. VALUE ADDRESS	DATA SIZE	CPL	DESCRIPTION	RANGE	DEFAULT	M.U.	LEVEL
8.1.11.1. 3-10 Oil									
10.001 - oon	**Oil valve min on**	**18002**	WORD	-	Oil valve on min time.	0...999	3	s	**2**
10.002 - oHo	**Oil valve max on**	**16439**	WORD	-	Oil valve on maximum time.	0...999	5	s	**2**
10.003 - ooF	**Oil valve off time**	**16440**	WORD	-	Oil valve off time.	0...60000	300	s	**2**
10.004- orE	**Oil P. Reg. Enable**	**16458**	WORD	-	Oil receiver enable delta pressure regulation 0 = off, 1 = on	0...1	0	flag	**2**
10.005 - orS	**Oil P. Set**	**16455**	WORD	-	Oil receiver set delta pressure	-3276.8...160.0	0.0	bar/ psi	**2**
10.006 - ord	**Oil P. Diff**	**16456**	WORD	-	Oil receiver differential delta pressure	0.0...160.0	0.0	bar/ psi	**2**
10.007 - orL	**Oil P. Reg. Delay**	**16459**	WORD	-	Oil receiver delay delta pressure regulation	0...900	0	s	**2**

8.1.12. | 3-11 Alarms

LABEL	LABEL	PAR. VALUE ADDRESS	DATA SIZE	CPL	DESCRIPTION	RANGE	DEFAULT	M.U.	LEVEL
3-11-1 System									
11.001 - A01	**High pressure 107**	**17049**	WORD	-	Alarm mode high press. 107 • AAH (0): automatic • MAH (1): manual • BAH (2): by event	0...2	0	num	**2**
		17050	WORD	-	Alarm priority high press. 107 **0= disabled** Disables alarm management; **1= warning** Enables alarm warning only; **2= alarm** Enables warning and any actions on regulators; **3= alarm + relay** Enables warning, any actions on regulators and activating a relay for blocking alarm;	0...3	0	num	
11.002 - A02	**High pressure 105**	**17051**	WORD	-	Alarm mode high press. 105 **See 11.001 - A01**	0...2	0	num	**2**
		17052	WORD	-	Alarm priority high press. 105 **See 11.001 - A01**	0...3	0	num	**2**
11.003 - A03	**High press. 105/107**	**17168**	WORD	-	Window time high pressure 105/107 bar	5...255	5	min	**2**
		17169	WORD	-	Max number of alarms in the window time high pressure 105/107 bar	0...32	0	num	**2**
11.004 - A04	**General**	**17053**	WORD	-	Alarm mode general alarm **See 11.001 - A01**	0...2	0	num	**2**
		17054	WORD	-	Alarm priority general alarm **See 11.001 - A01**	0...3	0	num	**2**

LABEL	LABEL	PAR. VALUE ADDRESS	DATA SIZE	CPL	DESCRIPTION	RANGE	DEFAULT	M.U.	LEVEL
11.005 - A05	**General**	**17170**	WORD	-	Window time general alarm	5...255	5	min	**2**
		17171	WORD	-	Max number of alarms in the window time general alarm	0...32	0	num	**2**
11.006 - A06	**GP reg.1 alarm**	**18259**	WORD	-	General purpose regulator GP 1 alarm type **See 11.001 - A01**	0...2	0	num	**2**
		18260	WORD	-	General purpose regulator GP 1 alarm priority **See 11.001 - A01**	0...3	0	num	**2**
11.007 - A07	**GP reg.1 warning**	**18261**	WORD	-	General purpose regulator GP 1 warning priority 0= disabled; 1= warning	0...1	0	flag	**2**
11.008 - A08	**GP reg.1 alarm set**	**18262**	WORD	-1	General purpose regulator GP 1 alarm setpoint	-200.0...800.0	0	num	**2**
11.009 - A09	**GP reg.1 warning set**	**18263**	WORD	-1	General purpose regulator GP 1 warning setpoint	-200.0...800.0	0	num	**2**
11.010 - A10	**GP reg.1 alarm diff.**	**18264**	WORD	-1	General purpose regulator GP 1 alarm differential.	-200.0...800.0	0	num	**2**
11.011 - A11	**GP reg.2 alarm**	**18265**	WORD	-	General purpose regulator GP 2 alarm type **See 11.001 - A01**	0...2	0	num	**2**
		18266	WORD	-	General purpose regulator GP 2 alarm priority **See 11.001 - A01**	0...3	0	num	**2**
11.012 - A12	**GP reg.2 warning**	**18267**	WORD	-	General purpose regulator GP 2 warning priority	0...1	0	num	**2**
11.013 - A13	**GP reg.2 alarm set**	**18268**	WORD	-1	General purpose regulator GP 2 alarm setpoint	-200.0...800.0	0	num	**2**
11.014 - A14	**GP reg.2 warning set**	**18269**	WORD	-1	General purpose regulator GP 2 warning setpoint	-200.0...800.0	0	num	**2**
11.015 - A15	**GP reg.2 alarm diff.**	**18270**	WORD	-1	General purpose regulator GP 2 alarm differential.	-200.0...800.0	0	num	**2**
11.016 - A16	**GP reg.3 alarm**	**18271**	WORD	-	General purpose regulator GP 3 alarm type **See 11.001 - A01**	0...2	0	num	**2**
		18272	WORD	-	General purpose regulator GP 3 alarm priority **See 11.001 - A01**	0...3	0	num	**2**

LABEL	LABEL	PAR. VALUE ADDRESS	DATA SIZE	CPL	DESCRIPTION	RANGE	DEFAULT	M.U.	LEVEL
11.017 - A17	**GP reg.3 warning**	**18273**	WORD	-	General purpose regulator GP 3 warning priority 0= disabled; 1= warning	0...1	0	num	**2**
11.018 - A18	**GP reg.3 alarm set**	**18274**	WORD	-1	General purpose regulator GP 3 alarm setpoint	-200.0...800.0	0	num	**2**
11.019 - A19	**GP reg.3 warning set**	**18275**	WORD	-1	General purpose regulator GP 3 warning setpoint	-200.0...800.0	0	num	**2**
11.020 - A20	**GP reg.3 alarm diff.**	**18276**	WORD	-1	General purpose regulator GP 3 alarm differential	-200.0...800.0	0	num	**2**
11.021 - A21	**GP reg.4 alarm**	**18277**	WORD	-	General purpose regulator GP 4 alarm type **See 11.001 - A01**	0...2	0	num	**2**
		18278	WORD	-	General purpose regulator GP 4 alarm priority **See 11.001 - A01**	0...3	0	num	**2**
11.022 - A22	**GP reg.4 warning**	**18279**	WORD	-	General purpose regulator GP 4 warning priority 0= disabled; 1= warning	0...1	0	num	**2**
11.023 - A23	**GP reg.4 alarm set**	**18280**	WORD	-1	General purpose regulator GP 4 alarm setpoint	-200.0...800.0	0	num	**2**
11.024 - A24	**GP reg.4 warning set**	**18281**	WORD	-1	General purpose regulator GP 4 warning setpoint	-200.0...800.0	0	num	**2**
11.025 - A25	**GP reg.4 alarm diff.**	**18282**	WORD	-1	General purpose regulator GP 4 alarm differential	-200.0...800.0	0	num	**2**
11.026 - A26	**GP input 1**	**17105**	WORD	-	General purpose alarm 1 digital input alarm type **See 11.001 - A01**	0...2	0	num	**2**
		16508	WORD	-	General purpose alarm 1 digital input alarm priority **See 11.001 - A01**	0...3	0	num	**2**
11.027 - A27	**GP input 1**	**17921**	WORD	-	General purpose alarm 1 digital input max number of alarm	5...255	5	min	**2**
		17922	WORD	-	General purpose alarm 1 digital input alarm window time	0...32	0	num	**2**

LABEL	LABEL	PAR. VALUE ADDRESS	DATA SIZE	CPL	DESCRIPTION	RANGE	DEFAULT	M.U.	LEVEL
11.028 - A28	**GP input 2**	**17106**	WORD	-	General purpose alarm 2 digital input alarm type **See 11.001 - A01**	0...2	0	num	**2**
		16585	WORD	-	General purpose alarm 2 digital input alarm priority **See 11.001 - A01**	0...3	0	num	**2**
11.029 - A29	**GP input 2**	**17923**	WORD	-	General purpose alarm 2 digital input max number of alarm	5...255	5	min	**2**
		17924	WORD	-	General purpose alarm 2 digital input alarm window time	0...32	0	num	**2**
11.030 - A30	**GP input 3**	**17121**	WORD	-	General purpose alarm 3 digital input alarm type **See 11.001 - A01**	0...2	0	num	**2**
		17095	WORD	-	General purpose alarm 3 digital input alarm priority **See 11.001 - A01**	0...3	0	num	**2**
11.031 - A31	**GP input 3**	**17925**	WORD	-	General purpose alarm 3 digital input max number of alarm	5...255	5	min	**2**
		17926	WORD	-	General purpose alarm 3 digital input alarm window time	0...32	0	num	**2**
11.032 - A32	**GP input 4**	**17821**	WORD	-	General purpose alarm 4 digital input alarm type **See 11.001 - A01**	0...2	0	num	**2**
		17096	WORD	-	General purpose alarm 4 digital input alarm priority **See 11.001 - A01**	0...3	0	num	**2**

LABEL	LABEL	PAR. VALUE ADDRESS	DATA SIZE	CPL	DESCRIPTION	RANGE	DEFAULT	M.U.	LEVEL
11.033 - A33	**GP input 4**	**17927**	WORD	-	General purpose alarm 4 digital input max number of alarm	5...255	5	min	**2**
		17928	WORD	-	General purpose alarm 4 digital input alarm window time	0...32	0	num	**2**
11.034 - A197	**Compr. maintenance**	**18313**	WORD	-	Alarm mode compressor max working hours override **See 11.001 - A01**	0...2	0	num	**2**
		18312	WORD	-	Alarm priority compressor max working hours override **See 11.001 - A01**	0...3	0	num	**2**
11.035 - A198	**Compr. max hours**	**18311**	WORD	-	Compressor max working hours	0...65535	65535	num	**2**
3-11-2 Low Temp									
11.036 - A34	**LT low suct. press.**	**16993**	WORD	-	LT line alarm mode low suction pressure **See 11.001 - A01**	0...2	0	num	**2**
		16994	WORD	-	LT line alarm priority low suction pressure **See 11.001 - A01**	0...3	0	num	**2**
11.037 - A35	**LT high suct. press**	**16995**	WORD	-	LT line alarm mode high suction pressure **See 11.001 - A01**	0...2	0	num	**2**
		16996	WORD	-	LT line alarm priority high suction pressure **See 11.001 - A01**	0...3	0	num	**2**

LABEL	LABEL	PAR. VALUE ADDRESS	DATA SIZE	CPL	DESCRIPTION	RANGE	DEFAULT	M.U.	LEVEL
11.038 - A36	**LT high disch. press.**	**16997**	WORD	-	LT line alarm mode high discharge pressure **See 11.001 - A01**	0...2	0	num	**2**
		16998	WORD	-	LT line alarm priority high discharge pressure **See 11.001 - A01**	0...3	0	num	**2**
11.039 - A37	**LT high disch. temp.**	**16999**	WORD	-	LT line alarm mode high discharge temperature **See 11.001 - A01**	0...2	0	num	**2**
		17000	WORD	-	LT line alarm priority high discharge temperature **See 11.001 - A01**	0...3	0	num	**2**
11.040 - A38	**LT low superheat**	**17001**	WORD	-	LT line alarm mode low superheat **See 11.001 - A01**	0...2	0	num	**2**
		17002	WORD	-	LT line alarm priority low superheat **See 11.001 - A01**	0...3	0	num	**2**
11.041 - A39	**LT high superheat**	**17003**	WORD	-	LT line alarm mode high superheat **See 11.001 - A01**	0...2	0	num	**2**
		17004	WORD	-	LT line alarm priority high superheat **See 11.001 - A01**	0...3	0	num	**2**
11.042 - A40	**LT comp.therm. switch**	**17025**	WORD	-	LT line alarm mode compressor thermal switch **See 11.001 - A01**	0...2	0	num	**2**
		17026	WORD	-	LT line alarm priority compressor thermal switch **See 11.001 - A01**	0...3	0	num	**2**
11.043 - A41	**LT comp.therm. switch**	**17144**	WORD	-	LT line max number of alarms in the window time compressor thermal switch	5...255	5	min	**2**
		17145	WORD	-	LT line window time compressor thermal switch	0...32	0	num	**2**

LABEL	LABEL	PAR. VALUE ADDRESS	DATA SIZE	CPL	DESCRIPTION	RANGE	DEFAULT	M.U.	LEVEL
11.044 - A42	**LT comp. high press.**	**17027**	WORD	-	LT line alarm mode high press. compressor **See 11.001 - A01**	0...2	0	num	**2**
		17028	WORD	-	LT line alarm priority high press. compressor **See 11.001 - A01**	0...3	0	num	**2**
11.045 - A43	**LT comp. high press.**	**17146**	WORD	-	LT line max number of alarms in the window time high pressure compressor	5...255	5	min	**2**
		17147	WORD	-	LT line window time high pressure compressor	0...32	0	num	**2**
11.046 - A44	**LT comp. oil**	**17029**	WORD	-	LT line alarm mode oil compressor **See 11.001 - A01**	0...2	0	num	**2**
		17030	WORD	-	LT line alarm priority oil compressor **See 11.001 - A01**	0...3	0	num	**2**
11.047 - A45	**LT comp. oil**	**17148**	WORD	-	LT line max number of alarms in the window time compressor oil	5...255	5	min	**2**
		17149	WORD	-	LT line window time compressor oil	0...32	0	num	**2**
11.048 - A46	**LT compr. gen. alarm**	**17031**	WORD	-	LT line alarm mode general compressor **See 11.001 - A01**	0...2	0	num	**2**
		17032	WORD	-	LT line alarm priority general compressor **See 11.001 - A01**	0...3	3	num	**2**
11.049 - A47	**LT compr. gen. alarm**	**17150**	WORD	-	LT line max number of alarms in the window time general compressor	5...255	5	min	**2**
		17151	WORD	-	LT line window time general compressor	0...32	0	num	**2**

LABEL	LABEL	PAR. VALUE ADDRESS	DATA SIZE	CPL	DESCRIPTION	RANGE	DEFAULT	M.U.	LEVEL
11.050 - A48	**LT inverter motor protection**	**17041**	WORD	-	LT line alarm mode inverter motor protection **See 11.001 - A01**	0...2	0	num	**2**
		17042	WORD	-	LT line alarm priority inverter motor protection **See 11.001 - A01**	0...3	0	num	**2**
11.051 - A49	**LT inverter motor protection**	**17160**	WORD	-	LT line max number of alarms in the window time inverter motor protection	5...255	5	min	**2**
		17161	WORD	-	LT line window time inverter motor protection	0...32	0	num	**2**
11.052 - A50	**LT low press. switch**	**17059**	WORD	-	LT line alarm mode low pressure switch **See 11.001 - A01**	0...2	0	num	**2**
		17060	WORD	-	LT line alarm priority low pressure switch **See 11.001 - A01**	0...3	3	num	**2**
11.053 - A51	**LT low press. switch**	**17176**	WORD	-	LT line max number of alarms in the window time low pressure switch	5...255	5	min	**2**
		17177	WORD	-	LT line window time low pressure switch	0...32	0	num	**2**
11.054 - A52	**Low press. alm byp**	**17249**	WORD	-	LT line low pressure switch alarm bypass	0...999	0	s	**2**
11.055 - A53	**High oil comp. byp**	**17994**	WORD	-	LT line compressor oil high level alarm bypass	0...999	0	s	**2**
11.056 - A54	**Low oil comp. byp**	**17992**	WORD	-	LT line compressor oil low level alarm bypass	0...999	0	s	**2**
11.057 - A55	**HP comp. alm byp**	**17997**	WORD	-	LT line high pressure compressor alarm bypass	0...999	0	s	**2**
11.058 - A56	**LT low suct. press.**	**17107**	WORD	-1	LT line low suction pressure alarm threshold	-1.0...160.0	8.0	bar/ psi	**2**
		17108	WORD	-1	LT line low suction pressure alarm threshold	-200.0...800.0	-4.27	°C/°F	**2**

LABEL	LABEL	PAR. VALUE ADDRESS	DATA SIZE	CPL	DESCRIPTION	RANGE	DEFAULT	M.U.	LEVEL
11.059 - A57	**Low suct P diff.**	**17122**	WORD	-1	LT line low suction pressure alarm differential	1...160	3.4	bar	**2**
		17123	WORD	-1	LT line low suction pressure alarm differential	1...800	8.8	°C/°F	**2**
11.060 - A58	**Low suct. press. byp**	**16853**	WORD	-	LT line low suction pressure alarm bypass	0...999	0	s	**2**
11.061 - A59	**LT high suct. press**	**17109**	WORD	-1	LT line high suction pressure alarm threshold	-1.0...160.0	18.0	bar/ psi	**2**
		17110	WORD	-1	LT line high suction pressure alarm threshold	-200.0...800.0	-21.0	°C/°F	**2**
11.062 - A60	**High suct P diff.**	**17124**	WORD	-1	LT line high suction pressure alarm differential	1.0...160.0	3.0	bar/ psi	**2**
		17125	WORD	-1	LT line high suction pressure alarm differential	1.0...800.0	5.4	°C/°F	**2**
11.063 - A61	**High suct.press. byp**	**17195**	WORD	-	LT line high suction pressure alarm bypass	0...999	0	s	**2**
11.064 - A62	**LT high disch. press.**	**17111**	WORD	-1	LT line high discharge pressure alarm threshold	-1.0...160.0	30.0	bar/ psi	**2**
		17112	WORD	-1	LT line high discharge pressure alarm threshold	-200.0...800.0	-4.1	°C/°F	**2**
11.065 - A63	**High disch P diff.**	**17126**	WORD	-1	LT line high discharge pressure alarm differential	1...160	4.3	bar/ psi	**2**
		17127	WORD	-1	LT line high discharge pressure alarm differential	0.1...800.0	5.4	°C/°F	**2**
11.066 - A64	**High disc.press. byp**	**16615**	WORD	-	LT line high discharge pressure alarm bypass	0...999	0	s	**2**
11.067 - A65	**LT high disch. temp.**	**17113**	WORD	-1	LT line high discharge temperature alarm threshold	-200.0...800.0	70.0	°C/°F	**2**

LABEL	LABEL	PAR. VALUE ADDRESS	DATA SIZE	CPL	DESCRIPTION	RANGE	DEFAULT	M.U.	LEVEL
11.068 - A66	**High disch T diff.**	**17128**	WORD	-1	LT line high discharge temperature alarm differential	0.1...800.0	1.0	°C/°F	**2**
11.069 - A67	**High disch.temp. byp**	**16665**	WORD	-	LT line high discharge temperature alarm bypass	0...999	0	s	**2**
11.070 - A68	**Min super heating**	**16570**	WORD	-1	LT line min superheat	-200.0...800.0	6.0	°C/°F	**2**
11.071 - A69	**Low superheat byp**	**16852**	WORD	-	LT line low superheat alarm bypass	0...999	90	s	**2**
11.072 - A70	**Max super heating**	**16571**	WORD	-1	LT line max superheat	0.1...800	0	°C/°F	**2**
11.073 - A71	**High superheat. byp**	**17988**	WORD	-	LT line high superheat alarm bypass	0...999	0	s	**2**
11.074 - A72	**Super heating diff.**	**16572**	WORD	-1	LT line differential superheat	0.1...800	1.0	°C/°F	**2**
3-11-3 High Temp									
11.075 - A77	**HT low suct. press.**	**17005**	WORD	-	HT line alarm mode low suction pressure **See 11.001 - A01**	0...2	0	num	**2**
		17006	WORD	-	HT line alarm priority low suction pressure **See 11.001 - A01**	0...3	2	num	**2**
11.076 - A78	**HT high suct. press**	**17007**	WORD	-	HT line alarm mode high suction pressure **See 11.001 - A01**	0...2	0	num	**2**
		17008	WORD	-	HT line alarm priority high suction pressure **See 11.001 - A01**	0...3	0	num	**2**
11.077 - A79	**HT high disch. press.**	**17009**	WORD	-	HT line alarm mode high discharge pressure **See 11.001 - A01**	0...2	0	num	**2**
		17010	WORD	-	HT line alarm priority high discharge pressure **See 11.001 - A01**	0...3	1	num	**2**

LABEL	LABEL	PAR. VALUE ADDRESS	DATA SIZE	CPL	DESCRIPTION	RANGE	DEFAULT	M.U.	LEVEL
11.078 - A80	**HT high disch. temp.**	**17011**	WORD	-	HT line alarm mode high discharge temperature **See 11.001 - A01**	0...2	0	num	**2**
		17012	WORD	-	HT line alarm priority high discharge temperature **See 11.001 - A01**	0...3	1	num	**2**
11.079 - A81	**HT low superheat**	**17013**	WORD	-	HT line alarm mode low superheat **See 11.001 - A01**	0...2	0	num	**2**
		17014	WORD	-	HT line alarm priority low superheat **See 11.001 - A01**	0...3	1	num	**2**
11.080 - A82	**HT high superheat**	**17015**	WORD	-	HT line alarm mode high superheat. **See 11.001 - A01**	0...2	0	num	**2**
		17016	WORD	-	HT line alarm priority high superheat. **See 11.001 - A01**	0...3	0	num	**2**
11.081 - A83	**HT comp.therm. switch**	**17033**	WORD	-	HT line alarm mode compressor thermal switch **See 11.001 - A01**	0...2	0	num	**2**
		17034	WORD	-	HT line alarm priority compressor thermal switch **See 11.001 - A01**	0...3	0	num	**2**
11.082 - A84	**HT comp.therm. switch**	**17152**	WORD	-	HT line max number of alarms in the window time compressor thermal switch	5...255	5	min	**2**
		17153	WORD	-	HT line window time compressor thermal switch	0...32	0	num	**2**
11.083 - A85	**HT comp. high press.**	**17035**	WORD	-	HT line alarm mode high pressure compressor **See 11.001 - A01**	0...2	0	num	**2**
		17036	WORD	-	HT line alarm priority high pressure compressor **See 11.001 - A01**	0...3	0	num	**2**
11.084 - A86	**HT comp. high press.**	**17154**	WORD	-	HT line max number of alarms in the window time high pressure compressor	5...255	5	min	**2**
		17155	WORD	-	HT line window time high pressure compressor	0...32	0	num	**2**

LABEL	LABEL	PAR. VALUE ADDRESS	DATA SIZE	CPL	DESCRIPTION	RANGE	DEFAULT	M.U.	LEVEL
11.085 - A87	**HT comp. oil**	**17037**	WORD	-	HT line alarm mode oil compressor **See 11.001 - A01**	0...2	0	num	**2**
		17038	WORD	-	HT line alarm priority oil compressor **See 11.001 - A01**	0...3	0	num	**2**
11.086 - A88	**HT comp. oil**	**17156**	WORD	-	HT line max number of alarms in the window time compressor oil	5...255	5	min	**2**
		17157	WORD	-	HT line window time compressor oil	0...32	0	num	**2**
11.087 - A89	**HT compr. gen. alarm**	**17039**	WORD	-	HT line alarm mode general compressor **See 11.001 - A01**	0...2	0	num	**2**
		17040	WORD	-	HT line alarm priority general compressor **See 11.001 - A01**	0...3	3	num	**2**
11.088 - A90	**HT compr. gen. alarm**	**17158**	WORD	-	HT line max number of alarms in the window time general compressor	5...255	5	min	**2**
		17159	WORD	-	HT line window time general compressor	0...32	0	num	**2**
11.089 - A91	**HT inverter motor protection**	**17045**	WORD	-	HT line alarm mode inverter motor protection **See 11.001 - A01**	0...2	0	num	**2**
		17046	WORD	-	HT line alarm priority inverter motor protection **See 11.001 - A01**	0...3	0	num	**2**
11.090 - A92	**HT inverter motor protection**	**17164**	WORD	-	HT line max number of alarms in the window time inverter motor protection	5...255	5	min	**2**
		17165	WORD	-	HT line window time inverter motor protection	0...32	0	num	**2**

LABEL	LABEL	PAR. VALUE ADDRESS	DATA SIZE	CPL	DESCRIPTION	RANGE	DEFAULT	M.U.	LEVEL
11.091 - A93	**HT low press. switch**	**17061**	WORD	-	HT line alarm mode low pressure switch **See 11.001 - A01**	0...2	0	num	**2**
		17062	WORD	-	HT line alarm priority low pressure switch **See 11.001 - A01**	0...3	3	num	**2**
11.092 - A94	**HT low press. switch**	**17178**	WORD	-	HT line max number of alarms in the window time low pressure switch	5...255	5	min	**2**
		17179	WORD	-	HT line window time low pressure switch	0...32	0	num	**2**
11.093 - A95	**HT disc. P probe err**	**18007**	WORD	-	HT line alarm mode discharge pressure probe **See 11.001 - A01**	0...2	0	num	**2**
		18008	WORD	-	HT line alarm priority discharge pressure probe **See 11.001 - A01**	0...3	1	num	**2**
11.094 - A96	**Low press. alm byp**	**17252**	WORD	-	HT line low pressure switch alarm bypass	0...999	0	s	**2**
11.095 - A97	**High oil comp. byp**	**17995**	WORD	-	HT line compressor oil high level alarm bypass	0...999	0	s	**2**
11.096 - A98	**Low oil comp. byp**	**17993**	WORD	-	HT line compressor oil low level alarm bypass	0...999	0	s	**2**
11.097 - A99	**HP comp. alm byp**	**17998**	WORD	-	HT line high pressure compressor alarm bypass	0...999	0	s	**2**
11.098 - A100	**HT low suct. press.**	**17114**	WORD	-1	HT line low suction pressure alarm threshold	-1.0...160.0	18.0	bar/ psi	**2**
		17115	WORD	-1	HT line low suction pressure alarm threshold	-200.0...800.0	-21.0	°C/°F	**2**
11.099 - A101	**Low suct P diff.**	**17130**	WORD	-1	HT line low suction pressure alarm differential	0.1...160.0	1.0	bar/ psi	**2**
		17131	WORD	-1	HT line low suction pressure alarm differential	0.1...800.0	1.8	°C/°F	**2**
11.100 - A102	**Low suct. press. byp**	**16614**	WORD	-	HT low suction pressure alarm bypass	0...999	0	s	**2**

LABEL	LABEL	PAR. VALUE ADDRESS	DATA SIZE	CPL	DESCRIPTION	RANGE	DEFAULT	M.U.	LEVEL
11.101 - A103	**HT high suct. press**	**17116**	WORD	-1	HT line high suction pressure alarm threshold	-1.0...160.0	35.0	bar/ psi	**2**
		17117	WORD	-1	HT line high suction pressure alarm differential	-200.0...800.0	1.3	°C/°F	**2**
11.102 - A104	**High suct P diff.**	**17132**	WORD	-1	HT line high suction pressure alarm differential	0.1...160.0	4.8	bar/ psi	**2**
		17133	WORD	-1	HT line high suction pressure alarm differential	0.1...800.0	5.2	°C/°F	**2**
11.103 - A105	**High suct.press. byp**	**16509**	WORD	-	HT line high suction pressure alarm bypass	0...999	0	s	**2**
11.104 - A106	**HT high disch. press.**	**17118**	WORD	-1	HT line high discharge pressure alarm threshold	-1.0...160.0	98.5	bar/ psi	**2**
		-							
11.105 - A107	**High disch P diff.**	**17134**	WORD	-1	HT line high discharge pressure alarm differential	0.1...160.0	1.1	bar/ psi	**2**
		-							
11.106 - A108	**High disc.press. byp**	**16664**	WORD	-	HT line high discharge pressure alarm bypass	0...999	0	s	**2**
11.107 - A109	**HT high disch. temp.**	**17120**	WORD	-1	HT line high discharge temperature alarm threshold	-200.0...800.0	125.0	°C/°F	**2**
11.108 - A110	**High disch T diff.**	**17136**	WORD	-1	HT line high discharge temperature alarm differential	0.1...800.0	5.0	°C/°F	**2**
11.109 - A111	**High disch.temp. byp**	**17066**	WORD	-	HT line high discharge temperature alarm bypass	0...999	1250	s	**2**
11.110 - A112	**Min super heating**	**16573**	WORD	-1	HT line min superheat	-200.0...800.0	6.0	°C/°F	**2**

LABEL	LABEL	PAR. VALUE ADDRESS	DATA SIZE	CPL	DESCRIPTION	RANGE	DEFAULT	M.U.	LEVEL
11.111 - A113	**Low superheat byp**	**17065**	WORD	-	HT line low superheat alarm bypass	0...999	90	s	**2**
11.112 - A114	**Max super heating**	**16574**	WORD	-1	HT line max superheat	-200.0...800.0	0	°C/°F	**2**
11.113 - A115	**High superheat. byp**	**17989**	WORD	-	HT line high superheat alarm bypass	0...999	0	s	**2**
11.114 - A116	**Super heating diff.**	**16575**	WORD	-1	HT line superheat differential	1.0...800.0	1.0	°C/°F	**2**
11.115 - A117	**Limiter activation**	**16560**	WORD	-1	HT line limiter activation	-1.0...160.0	106.0	bar/ psi	**2**
		-							
11.116 - A118	**Limiter deactivation**	**16562**	WORD	-1	HT limiter deactivation	-1.0...160.0	105.0	bar/ psi	**2**
		-							
11.117 - A119	**Limiter reduct. time**	**16564**	WORD	-	HT line pressure limiter reduction time	0...999	60	s	**2**
11.118 - A120	**Limiter reduct. perc.**	**16565**	WORD	-	HT line pressure limiter reduction percentage	0...100	10	%	**2**
3-11-4 High Pressure									
11.119 - A121	**HP valve alarm**	**17916**	WORD	-	HP valve alarm mode **See 11.001 - A01**	0...2	0	num	**2**
		17915	WORD	-	HP valve alarm priority **See 11.001 - A01**	0...3	0	num	**2**
11.120 - A122	**HP valve alarm**	**17913**	WORD	-	HP valve max number of alarms in the window time	5...255	5	min	**2**
		17914	WORD	-	HP valve alarm window time	0...32	0	num	**2**

LABEL	LABEL	PAR. VALUE ADDRESS	DATA SIZE	CPL	DESCRIPTION	RANGE	DEFAULT	M.U.	LEVEL
11.121 - A123	**Ext. air probe err.**	**18011**	WORD	-	External air alarm mode probe error **See 11.001 - A01**	0...2	0	num	**2**
		18012	WORD	-	External air alarm priority probe error **See 11.001 - A01**	0...3	0	num	**2**
3-11-5 Gas Cooler									
11.122 - A124	**Gascooler high press**	**17101**	WORD	-	Gascooler alarm mode high pressure **See 11.001 - A01**	0...3	0	num	**2**
		17102	WORD	-	Gascooler alarm priority high pressure **See 11.001 - A01**	0...2	0	num	**2**
11.123 - A125	**Gascooler high press**	**16584**	WORD	-1	Gascooler max pressure alarm	-1.0...160.0	0	bar/ psi	**2**
11.124 - A126	**High press. diff.**	**16400**	WORD	-1	Gascooler high pressure alarm differential	0.0...160.0	0	bar/ psi	**2**
11.125 - A127	**Gascooler out high t.**	**17021**	WORD	-	Gascooler alarm mode high temperature **See 11.001 - A01**	0...2	0	num	**2**
		17022	WORD	-	Gascooler alarm priority high temperature **See 11.001 - A01**	0...3	0	num	**2**
11.126 - A128	**Gascooler out low t.**	**17023**	WORD	-	Gascooler alarm mode low temperature **See 11.001 - A01**	0...2	0	num	**2**
		17024	WORD	-	Gascooler alarm priority low temperature **See 11.001 - A01**	0...3	0	num	**2**
11.127 - A129	**Gascooler out high t.**	**17140**	WORD	-1	Gascooler out high temperature alarm threshold	-200.0...800.0	36.0	°C/°F	**2**
11.128 - A130	**Gascooler out low t.**	**17141**	WORD	-1	Gascooler out low temperature alarm threshold	-200.0...800.0	0	°C/°F	**2**
11.129 - A131	**Temp. alarm diff.**	**17142**	WORD	-1	Gascooler temperature alarm differential	0.1...800.0	1.0	°C/°F	**2**

LABEL	LABEL	PAR. VALUE ADDRESS	DATA SIZE	CPL	DESCRIPTION	RANGE	DEFAULT	M.U.	LEVEL
11.130 - A132	**Gascooler fan 1**	**17077**	WORD	-	Gascooler fan 1 alarm type See 11.0**01 - A01**	0...2	0	num	**2**
		17078	WORD	-	Gascooler fan 1 alarm priority **See 11.001 - A01**	0...3	0	num	**2**
11.131 - A133	**Gascooler fan 2**	**17079**	WORD	-	Gascooler fan 2 alarm type **See 11.001 - A01**	0...2	0	num	**2**
		17080	WORD	-	Gascooler fan 2 alarm priority **See 11.001 - A01**	0...3	0	num	**2**
11.132 - A134	**Gascooler fan 3**	**17081**	WORD	-	Gascooler fan 3 alarm type **See 11.001 - A01**	0...2	0	num	**2**
		17082	WORD	-	Gascooler fan 3 alarm priority **See 11.001 - A01**	0...3	0	num	**2**
11.133 - A135	**Gascooler fan 4**	**17083**	WORD	-	Gascooler fan 4 alarm type **See 11.001 - A01**	0...2	0	num	**2**
		17084	WORD	-	Gascooler fan 4 alarm priority **See 11.001 - A01**	0...3	0	num	**2**
11.134 - A136	**Gascooler fan**	**17188**	WORD	-	Gascooler fan max number of alarms in the window time	5...255	5	min	**2**
		17189	WORD	-	Gascooler fan alarm window time	0...32	0	min	**2**
11.135 - A137	**Gascooler alarm**	**17085**	WORD	-	Gascooler alarm mode **See 11.001 - A01**	0...2	0	num	**2**
		17086	WORD	-	Gascooler alarm priority **See 11.001 - A01**	0...3	0	num	**2**

LABEL	LABEL	PAR. VALUE ADDRESS	DATA SIZE	CPL	DESCRIPTION	RANGE	DEFAULT	M.U.	LEVEL
11.136 - A138	**Gascooler alarm**	**17192**	WORD	-	Gascooler max number of alarms in the window time	5...255	5	min	**2**
		17193	WORD	-	Gascooler alarm window time	0...32	0	num	**2**
11.137 - A139	**Gascooler inverter**	**17087**	WORD	-	Gascooler inverter alarm mode **See 11.001 - A01**	0...2	0	num	**2**
		17088	WORD	-	Gascooler inverter alarm priority **See 11.001 - A01**	0...3	0	num	**2**
11.138 - A140	**Gascooler inverter**	**17190**	WORD	-	Gascooler inverter fan max number of alarms in the window time	5...255	5	min	**2**
		17191	WORD	-	Gascooler inverter fan alarm window time	0...32	0	num	**2**
3-11-6 Heat Recovery									
11.139 - A141	**HR1 alarm**	**17089**	WORD	-	Heat recovery 1 alarm type **See 11.001 - A01**	0...3	0	num	**2**
		17090	WORD	-	Heat recovery 1 alarm priority **See 11.001 - A01**	0...2	0	num	**2**
11.140 - A142	**HR1 alarm**	**17182**	WORD	-	Heat recovery 1 max number of alarm	5...255	0	num	**2**
		17183	WORD	-	Heat recovery 1 window time	0...32	0	num	**2**
11.141 - A143	**HR1 min. diff. alarm**	**16583**	WORD	-	Heat recovery 1 min difference alarm type **See 11.001 - A01**	0...3	0	num	**2**
		16578	WORD	-	Heat recovery 1 min difference alarm priority **See 11.001 - A01**	0...2	0	num	**2**

LABEL	LABEL	PAR. VALUE ADDRESS	DATA SIZE	CPL	DESCRIPTION	RANGE	DEFAULT	M.U.	LEVEL
11.142 - A144	**HR2 alarm**	**17091**	WORD	-	Heat recovery 2 alarm type **See 11.001 - A01**	0...3	0	num	**2**
		17092	WORD	-	Heat recovery 2 alarm priority **See 11.001 - A01**	0...2	0	num	**2**
11.143 - A145	**HR2 alarm**	**17184**	WORD	-	Heat recovery 2 max number of alarm	5...255	5	min	**2**
		17185	WORD	-	Heat recovery 2 window time	0...32	0	num	**2**
11.144 - A146	**HR2 min. diff. alarm**	**16582**	WORD	-	Heat recovery 2 min difference alarm type **See 11.001 - A01**	0...2	0	num	**2**
		16581	WORD	-	Heat recovery 2 min difference alarm priority **See 11.001 - A01**	0...3	0	num	**2**
3-11-7 Receiver									
11.145 - A147	**Receiver low press.**	**17017**	WORD	-	Receiver low pressure alarm mode **See 11.001 - A01**	0...2	0	num	**2**
		17018	WORD	-	Receiver low pressure alarm priority **See 11.001 - A01**	0...3	0	num	**2**
11.146 - A148	**Receiver high press.**	**17019**	WORD	-	Receiver high pressure alarm mode **See 11.001 - A01**	0...2	0	num	**2**
		17020	WORD	-	Receiver high pressure alarm priority **See 11.001 - A01**	0...3	0	num	**2**
11.147 - A149	**Receiver valve fail**	**17063**	WORD	-	Receiver valve alarm mode **See 11.001 - A01**	0...2	0	num	**2**
		17064	WORD	-	Receiver valve alarm priority **See 11.001 - A01**	0...3	0	num	**2**

LABEL	LABEL	PAR. VALUE ADDRESS	DATA SIZE	CPL	DESCRIPTION	RANGE	DEFAULT	M.U.	LEVEL
11.148 - A150	**Receiver valve fail**	**17180**	WORD	-	Receiver valve max number of alarms in the window time	5...255	5	min	**2**
		17181	WORD	-	Receiver valve alarm window time	0...32	0	num	**2**
11.149 - A151	**ST comp.therm. switch**	**18115**	WORD	-	PC line alarm mode compressor thermal switch **See 11.001 - A01**	0...3	0	num	**2**
		18114	WORD	-	PC line alarm priority compressor thermal switch **See 11.001 - A01**	0...2	0	num	**2**
11.150 - A152	**ST comp.therm. switch**	**18117**	WORD	-	PC line max number of alarms in the window time compressor thermal switch	5...255	5	min	**2**
		18116	WORD	-	PC line window time compressor thermal switch	0...32	0	num	**2**
11.151 - A153	**ST comp. high press.**	**18119**	WORD	-	PC line alarm mode high pressure compressor **See 11.001 - A01**	0...2	0	num	**2**
		18118	WORD	-	PC line alarm priority high pressure compressor **See 11.001 - A01**	0...3	0	num	**2**
11.152 - A154	**ST comp. high press.**	**18121**	WORD	-	PC line max number of alarms in the window time high pressure compressor	5...255	5	min	**2**
		18120	WORD	-	PC line window time high pressure compressor	0...32	0	num	**2**

LABEL	LABEL	PAR. VALUE ADDRESS	DATA SIZE	CPL	DESCRIPTION	RANGE	DEFAULT	M.U.	LEVEL
11.153 - A155	**ST comp. oil**	**18124**	WORD	-	PC line alarm mode oil compressor **See 11.001 - A01**	0...2	0	num	**2**
		18123	WORD	-	PC line alarm priority oil compressor **See 11.001 - A01**	0...3	0	num	**2**
11.154 - A156	**ST comp. oil**	**18126**	WORD	-	PC line max number of alarms in the window time compressor oil	5...255	5	min	**2**
		18125	WORD	-	PC line window time compressor oil	0...32	0	num	**2**
11.155 - A157	**ST compr. gen. alarm**	**18129**	WORD	-	PC line alarm mode general compressor **See 11.001 - A01**	0...2	0	num	**2**
		18128	WORD	-	PC line alarm priority general compressor **See 11.001 - A01**	0...3	0	num	**2**
11.156 - A158	**ST compr. gen. alarm**	**18131**	WORD	-	PC line max number of alarms in the window time general compressor	5...255	5	min	**2**
		18130	WORD	-	PC line window time general compressor	0...32	0	num	**2**
11.157 - A159	**ST inverter motor protection**	**18152**	WORD	-	PC line alarm mode inverter motor protection **See 11.001 - A01**	0...2	0	num	**2**
		18151	WORD	-	PC line alarm priority inverter motor protection **See 11.001 - A01**	0...3	0	num	**2**

LABEL	LABEL	PAR. VALUE ADDRESS	DATA SIZE	CPL	DESCRIPTION	RANGE	DEFAULT	M.U.	LEVEL
11.158 - A160	**ST inverter motor protection**	**18154**	WORD	-	PC line max number of alarms in the window time inverter motor protection	5...255	5	min	**2**
		18153	WORD	-	PC line window time inverter motor protection	0...32	0	num	**2**
11.159 - A190	**PC Lo superheat**	**18305**	WORD	-	PC line alarm mode low superheat **See 11.001 - A01**	0...2	0	num	**2**
		18304	WORD	-	PC line alarm priority low superheat **See 11.001 - A01**	0...3	0	num	**2**
11.160 - A191	**PC Hi superheat**	**18303**	WORD	-	PC line alarm mode high superheat **See 11.001 - A01**	0...2	0	num	**2**
		18302	WORD	-	PC line alarm priority high superheat **See 11.001 - A01**	0...3	0	num	**2**
11.161 - A161	**CO2 level 1**	**17067**	WORD	-	CO2 level 1 alarm type **See 11.001 - A01**	0...2	0	num	**2**
		17068	WORD	-	CO2 level 1 alarm priority **See 11.001 - A01**	0...3	0	num	**2**
11.162 - A162	**CO2 level 2**	**17069**	WORD	-	CO2 level 2 alarm type **See 11.001 - A01**	0...2	0	num	**2**
		17070	WORD	-	CO2 level 2 alarm priority **See 11.001 - A01**	0...3	0	num	**2**
11.163 - A163	**CO2 level 3**	**17071**	WORD	-	CO2 level 3 alarm type **See 11.001 - A01**	0...2	0	num	**2**
		17072	WORD	-	CO2 level 3 alarm priority **See 11.001 - A01**	0...3	0	num	**2**
11.164 - A164	**CO2 level 4**	**17073**	WORD	-	CO2 level 4 alarm type **See 11.001 - A01**	0...2	0	num	**2**
		17074	WORD	-	CO2 level 4 alarm priority **See 11.001 - A01**	0...3	0	num	**2**
11.165 - A165	**CO2 level 5**	**17075**	WORD	-	CO2 level 5 alarm type **See 11.001 - A01**	0...2	0	num	**2**
		17076	WORD	-	CO2 level 5 alarm priority **See 11.001 - A01**	0...3	0	num	**2**

LABEL	LABEL	PAR. VALUE ADDRESS	DATA SIZE	CPL	DESCRIPTION	RANGE	DEFAULT	M.U.	LEVEL
11.166 - A166	**CO2 level**	**17186**	WORD	-	CO2 level max number of alarms in the window time	5...255	5	min	**2**
		17187	WORD	-	CO2 level alarm window time	0...32	0	num	**2**
11.167 - A167	**CO2 low level**	**18027**	WORD	-	CO2 level alarm mode **See 11.001 - A01**	0...2	0	num	**2**
		18026	WORD	-	CO2 level alarm priority **See 11.001 - A01**	0...3	0	num	**2**
11.168 - A168	**CO2 low level**	**18023**	WORD	-1	CO2 level alarm set	-3276,8...3276,7	0	num	**2**
11.169 - A169	**CO2 level diff.**	**18024**	WORD	-1	CO2 level alarm differential	-3276,8...3276,7	0	num	**2**
11.170 - A170	**CO2 level bypass**	**18025**	WORD	-	CO2 level alarm bypass	0...999	0	s	**2**
11.171 - A171	**Receiver high press.**	**17137**	WORD	-	Receiver high pressure alarm threshold	-1.0...160.0	42.0	bar/ psi	**2**
11.172 - A172	**Receiver low press.**	**17138**	WORD	-	Receiver low pressure alarm threshold	-1.0...160.0	30.0	bar/ psi	**2**
11.173 - A173	**Rec. alarm diff.**	**17139**	WORD	-	Receiver alarm differential	1.0...160.0	5.0	bar/ psi	**2**
11.174 - A174	**ST HP comp. alm byp**	**18122**	WORD	-	PC line high pressure compressor alarm bypass	0...999	0	s	**2**
11.175 - A175	**ST high oil comp. byp**	**18137**	WORD	-	PC line compressor oil high level alarm bypass	0...999	0	s	**2**
11.176 - A176	**ST low oil comp. byp**	**18142**	WORD	-	PC line compressor oil low level alarm bypass	0...999	0	s	**2**
11.177 - A192	**Min super heating**	**18307**	WORD	-1	PC line min superheat	-200.0...800.0	0	°C/°F	**2**
11.178 - A193	**Low superheat byp**	**18310**	WORD	-	PC line low superheat alarm bypass	0...999	0	s	**2**
11.179 - A194	**Max super heating**	**18306**	WORD	-1	PC line max superheat	-200.0...800.0	0	°C/°F	**2**
11.180 - A195	**High superheat. byp**	**18309**	WORD	-	PC line high superheat alarm bypass	0...999	0	s	**2**

LABEL	LABEL	PAR. VALUE ADDRESS	DATA SIZE	CPL	DESCRIPTION	RANGE	DEFAULT	M.U.	LEVEL
11.181 - A196	**Super heating diff.**	**18308**	WORD	-1	PC line differential superheat	1...800	0	°C/°F	**2**
3-11-8 Heat Exchanger									
11.182 - A181	**Heat exch. alarm**	**17093**	WORD	-	Heat exchanger alarm mode **See 11.001 - A01**	0...2	0	num	**2**
		17094	WORD	-	Heat exchanger alarm priority **See 11.001 - A01**	0...3	0	num	**2**
11.183 - A182	**Heat exch. alarm**	**17911**	WORD	-	Heat exchanger max number of alarms in the window time	5...255	5	min	**2**
		17912	WORD	-	Heat exchanger alarm window time	0...32	0	num	**2**
3-11-9 Oil									
11.184 - A183	**Oil level**	**17057**	WORD	-	Oil level alarm priority **See 11.001 - A01**	0...2	0	num	**2**
		17058	WORD	-	Oil level max number of alarms in the window time **See 11.001 - A01**	0...3	0	num	**2**
11.185 - A184	**Oil level**	**17174**	WORD	-	Oil level window time	5...255	5	min	**2**
		17175	WORD	-	Oil level alarm bypass	0...32	0	num	**2**
11.186 - A185	**Oil level alm byp**	**17996**	WORD	-	Oil alarm mode temperature probe error	0...999	0	s	**2**
11.187 - A186	**Oil temp. probe err.**	**18009**	WORD	-	Oil alarm priority temperature probe error **See 11.001 - A01**	0...2	0	num	**2**
		18010	WORD	-	Oil alarm mode high temperature **See 11.001 - A01**	0...3	0	num	**2**

LABEL	LABEL	PAR. VALUE ADDRESS	DATA SIZE	CPL	DESCRIPTION	RANGE	DEFAULT	M.U.	LEVEL
11.188 - A187	**Oil high temp.**	**18287**	WORD	-	Oil alarm priority high temperature **See 11.001 - A01**	0...2	0	num	**2**
		18288	WORD	-	Oil high temperature alarm threshold **See 11.001 - A01**	0...3	0	num	**2**
11.189 - A188	**Oil high temp.**	**18285**	WORD	-	Oil high temperature alarm differential	-200.0...800.0	0	°C/°F	**2**
11.190 - A189	**Oil high temp.**	**18286**	WORD	-	Oil high temperature alarm differential	-200.0...800.0	0	°C/°F	**2**
11.191 - A199	**Oil Hi Press.**	**18149**	WORD	-	Oil Receiver - high pressure alarm mode	0...2	0	num	**2**
		18147	WORD	-	Oil Receiver - high pressure alarm priority	0...3	0	num	**2**
11.192 - A200	**Oil Hi Press. Set**	**18145**	WORD	-	Oil Receiver - high pressure alarm set	-14.5...2320.0	0	bar/psi	**2**
11.193 - A201	**Oil Lo Press.**	**18150**	WORD	-	Oil Receiver - low pressure alarm mode	0...2	0	num	**2**
		18148	WORD	-	Oil Receiver - low pressure alarm priority	0...3	0	num	**2**
11.194 - A202	**Oil Hi Press. Set**	**18146**	WORD	-	Oil Receiver - low pressure alarm set	-14.5...2320.0	0	bar/psi	**2**
11.195 - A203	**Oil Hi/Lo P. Bypass**	**18143**	WORD	-	Oil Receiver - pressure alarm bypass	0...999	0	s	**2**
11.196 - A204	**Oil Hi/Lo P. Diff**	**18144**	WORD	-	Oil Receiver - pressure alarms differential	-3276.8...3276.7	0	bar/psi	**2**
11.197 - A205	**Oil P. Alarm Source**	**18141**	WORD	-	Oil Receiver - pressure alarm source	0...1	0	num	**2**

8.1.13. | 3-12 IO Allocation

LABEL	LABEL	PAR. VALUE ADDRESS	DATA SIZE	CPL	DESCRIPTION	RANGE	DEFAULT	M.U.	LEVEL
3-12-1 AI Allocation									
3-12-1-1 System									
AI analogue input allocation parameter values • (module) 0=not configured, 1=EWCM, 2=EXP1...13=EXP12 • (I/O number) 0=not configured, 1=AI1, 2=AI2,...12=AI12									

LABEL	LABEL	PAR. VALUE ADDRESS	DATA SIZE	CPL	DESCRIPTION	RANGE	DEFAULT	M.U.	LEVEL
12.001 - 01P	**Machine room temp.**	**17929**	WORD	-	Engine room temperature probe (module)	0...13	0	num	**3**
		17930	WORD	-	Engine room temperature probe (I/O number)	0...12	0	num	**3**
12.002 - 02P	**Elec. cabinet temp.**	**17931**	WORD	-	Electrical cabinet temperature probe (module)	0...13	0	num	**3**
		17932	WORD	-	Electrical cabinet temperature probe (I/O number)	0...12	0	num	**3**
12.003 - 03P	**GP regulator 1**	**18064**	WORD	-	General purpose regulator GP 1 probe (module)	0...13	0	num	**3**
		18065	WORD	-	General purpose regulator GP 1 probe (I/O number)	0...12	0	num	**3**
12.004 - 04P	**GP regulator 2**	**18066**	WORD	-	General purpose regulator GP 2 probe (module)	0...13	0	num	**3**
		18067	WORD	-	General purpose regulator GP 2 probe (I/O number)	0...12	0	num	**3**
12.005 - 05P	**GP regulator 3**	**18068**	WORD	-	General purpose regulator GP 3 probe (module)	0...13	0	num	**3**
		18069	WORD	-	General purpose regulator GP 3 probe (I/O number)	0...12	0	num	**3**
12.006 - 06P	**GP regulator 4**	**18070**	WORD	-	General purpose regulator GP 4 probe (module)	0...13	0	num	**3**
		18071	WORD	-	General purpose regulator GP 4 probe (I/O number)	0...12	0	num	**3**
3-12-1-2 Low Temp									
12.007 - 07P	**LT suction press.**	**16620**	WORD	-	LT line suction press.probe (module)	0...13	0	num	**3**
		16621	WORD	-	LT line suction press.probe (I/O number)	0...12	0	num	**3**
12.008 - 07L	**LT suct. press. 4mA**	**16622**	WORD	-1	LT line suction pressure analog input lower limit	-1.0...07H	0	bar/ psi	**3**
12.009 - 07H	**LT suct. press.20mA**	**16623**	WORD	-1	LT line suction pressure analog input upper limit	07L...160.0	50.0	bar/ psi	**3**
12.010 - 08P	**LT suct.press. backup**	**16624**	WORD	-	LT line suction press. backup probe (module)	0...13	0	num	**3**
		16625	WORD	-	LT line suction press. backup probe (I/O number)	0...12	0	num	**3**
12.011 - 08L	**LT suct. P bck 4mA**	**16626**	WORD	-1	LT line suction pressure analog input backup lower limit	-1.0...08H	0	bar/ psi	**3**

LABEL	LABEL	PAR. VALUE ADDRESS	DATA SIZE	CPL	DESCRIPTION	RANGE	DEFAULT	M.U.	LEVEL
12.012 - 08H	**LT suct. P bck 20mA**	**16627**	WORD	-1	LT line suction pressure analog input backup upper limit	08L...160.0	0	bar/ psi	**3**
12.013 - 09P	**LT suction temp.**	**16628**	WORD	-	LT line suction temp.probe (module)	0...13	1	num	**3**
		16629	WORD	-	LT line suction temp.probe (I/O number)	0...12	6	num	**3**
12.014 - 10P	**LT discharge temp.**	**16630**	WORD	-	LT line discharge temperature probe (module)	0...13	1	num	**3**
		16631	WORD	-	LT line discharge temperature probe (I/O number)	0...12	12	num	**3**
3-12-1-3 HighTemp									
12.015 - 11P	**HT suction press.**	**16590**	WORD	-	HT line suction pressure probe (module)	0...13	1	num	**3**
		16591	WORD	-	HT line suction pressure probe (I/O number)	0...12	1	num	**3**
12.016 - 11L	**HT suct. press. 4mA**	**16592**	WORD	-1	HT line suction pressure analog input lower limit	-1.0...11H	0	bar/ psi	**3**
12.017 - 11H	**HT suct. press.20mA**	**16593**	WORD	-1	HT line suction pressure analog input upper limit	11L...160.0	50.0	bar/ psi	**3**
12.018 - 12P	**HT suct.press. backup**	**16594**	WORD	-	HT line suction press. backup probe (module)	0...13	0	num	**3**
		16595	WORD	-	HT line suction pressure backup probe (I/O number)	0...12	0	num	**3**
12.019 - 12L	**HT suct. P bck 4mA**	**16596**	WORD	-1	HT line suction pressure analog input backup lower limit	-1.0...12H	0	bar/ psi	**3**
12.020 - 12H	**HT suct. P bck 20mA**	**16597**	WORD	-1	HT line suction pressure analog input backup upper limit	12L...160.0	0	bar/ psi	**3**
12.021 - 13P	**HT suction temp.**	**16598**	WORD	-	HT line suction temperature probe (module)	0...13	1	num	**3**
		16599	WORD	-	HT line suction temperature probe (I/O number)	0...12	5	num	**3**
12.022 - 14P	**HT discharge press.**	**16600**	WORD	-	HT line discharge pressure probe (module)	0...13	1	num	**3**
		16601	WORD	-	HT line discharge pressure probe (I/O number)	0...12	3	num	**3**

LABEL	LABEL	PAR. VALUE ADDRESS	DATA SIZE	CPL	DESCRIPTION	RANGE	DEFAULT	M.U.	LEVEL
12.023 - 14L	**HT disch. press. 4mA**	**16602**	WORD	-1	HT line discharge pressure analog input lower limit	-1.0...14H	0	bar/ psi	**3**
12.024 - 14H	**HT disch. press.20mA**	**16603**	WORD	-1	HT line discharge pressure analog input upper limit	14L...160.0	150.0	bar/ psi	**3**
12.025 - 15P	**HT discharge temp.**	**16604**	WORD	-	HT line discharge temperature probe (module)	0...13	0	num	**3**
		16605	WORD	-	HT line discharge temperature probe (I/O number)	0...12	0	num	**3**
3-12-1-4 High Pressure									
12.026 - 16P	**HP valve press.**	**16606**	WORD	-	HP valve pressure probe (module)	0...13	0	num	**3**
		16607	WORD	-	HP valve pressure probe (I/O number)	0...12	0	num	**3**
12.027 - 16L	**HP valve press.4mA**	**16608**	WORD	-1	HP valve pressure analog input lower limit	-1.0...16H	0	bar/ psi	**3**
12.028 - 16H	**HP valve press.20mA**	**16609**	WORD	-1	HP valve pressure analog input upper limit	16L...160.0	0	bar/ psi	**3**
12.029 - 17P	**HP valve press.back.**	**16610**	WORD	-	HP valve pressure backup probe (module)	0...13	0	num	**3**
		16611	WORD	-	HP valve pressure backup probe (I/O number)	0...12	0	num	**3**
12.030 - 17L	**HP valve P back.4mA**	**16612**	WORD	-1	HP valve pressure backup analog input lower limit	-1.0...17H	0	bar/ psi	**3**
12.031 - 17H	**HP valve P back.20mA**	**16613**	WORD	-1	HP valve pressure backup analog input upper limit	17L...160.0	0	bar/ psi	**3**
12.032 - 18P	**External air temp.**	**16632**	WORD	-	External air temperature probe (module)	0...13	1	num	**3**
		16633	WORD	-	External air temperature probe (I/O number)	0...12	7	num	**3**
3-12-1-5 Gas Cooler									
12.033 - 19P	**Gascooler out 1**	**16586**	WORD	-	Gascooler out 1 temperature probe (near gascooler) (module)	0...13	1	num	**3**
		16587	WORD	-	Gascooler out 1 temperature probe (near gascooler) (I/O number)	0...12	8	num	**3**

LABEL	LABEL	PAR. VALUE ADDRESS	DATA SIZE	CPL	DESCRIPTION	RANGE	DEFAULT	M.U.	LEVEL
12.034 - 20P	**Gascooler out 2**	**16588**	WORD	-	Gascooler out 2 temperature probe (near rack) (module)	0...13	1	num	**3**
		16589	WORD	-	Gascooler out 2 temperature probe (near rack) (I/O number)	0...12	9	num	**3**
3-12-1-6 Heat Recovery									
12.035 - 21P	**HR1 CO2 inlet temp.**	**16636**	WORD	-	Heat recovery 1 temperature probe CO2 inlet (module)	0...13	0	num	**3**
		16637	WORD	-	Heat recovery 1 temperature probe CO2 inlet (I/O number)	0...12	0	num	**3**
12.036 - 22P	**HR1 CO2 outlet temp.**	**16638**	WORD	-	Heat recovery 1 temperature probe CO2 outlet (module)	0...13	0	num	**3**
		16639	WORD	-	Heat recovery 1 temperature probe CO2 outlet (I/O number)	0...12	0	num	**3**
12.037 - 23P	**HR1 H2O inlet temp.**	**16640**	WORD	-	Heat recovery 1 temperature probe H2O inlet (module)	0...13	0	num	**3**
		16641	WORD	-	Heat recovery 1 temperature probe H2O inlet (I/O number)	0...12	0	num	**3**
12.038 - 24P	**HR1 H2O outlet temp.**	**16642**	WORD	-	Heat recovery 1 temperature probe H2O outlet (module)	0...13	0	num	**3**
		16643	WORD	-	Heat recovery 1 temperature probe H2O outlet (I/O number)	0...12	0	num	**3**
12.039 - 25P	**HR1 boiler top temp.**	**16644**	WORD	-	Heat recovery 1 temperature probe boiler top (module)	0...13	0	num	**3**
		16645	WORD	-	Heat recovery 1 temperature probe boiler top (I/O number)	0...12	0	num	**3**
12.040 - 26P	**HR1 boil. mid. temp.**	**16646**	WORD	-	Heat recovery 1 temperature probe boiler middle (module)	0...13	0	num	**3**
		16647	WORD	-	Heat recovery 1 temperature probe boiler middle (I/O number)	0...12	0	num	**3**
12.041 - 27P	**HR1 boil.bott. temp.**	**16648**	WORD	-	Heat recovery 1 temperature probe boiler bottom (module)	0...13	0	num	**3**
		16649	WORD	-	Heat recovery 1 temperature probe boiler bottom (I/O number)	0...12	0	num	**3**
12.042 - 28P	**HR2 CO2 inlet temp.**	**16650**	WORD	-	Heat recovery 2 temperature probe CO2 inlet (module)	0...13	0	num	**3**
		16651	WORD	-	Heat recovery 2 temperature probe CO2 inlet (I/O number)	0...12	0	num	**3**
12.043 - 29P	**HR2 CO2 outlet temp.**	**16652**	WORD	-	Heat recovery 2 temperature probe CO2 outlet (module)	0...13	0	num	**3**
		16653	WORD	-	Heat recovery 2 temperature probe CO2 outlet (I/O number)	0...12	0	num	**3**

LABEL	LABEL	PAR. VALUE ADDRESS	DATA SIZE	CPL	DESCRIPTION	RANGE	DEFAULT	M.U.	LEVEL
12.044 - 30P	**HR2 H2O inlet temp.**	**16654**	WORD	-	Heat recovery 2 temperature probe H2O inlet (module)	0...13	0	num	**3**
		16655	WORD	-	Heat recovery 2 temperature probe H2O inlet (I/O number)	0...12	0	num	**3**
12.045 - 31P	**HR2 H2O outlet temp.**	**16656**	WORD	-	Heat recovery 2 temperature probe H2O outlet (module)	0...13	0	num	**3**
		16657	WORD	-	Heat recovery 2 temperature probe H2O outlet (I/O number)	0...12	0	num	**3**
12.046 - 32P	**HR2 boiler top temp.**	**16658**	WORD	-	Heat recovery 2 temperature probe boiler top (module)	0...13	0	num	**3**
		16659	WORD	-	Heat recovery 2 temperature probe boiler top (I/O number)	0...12	0	num	**3**
12.047 - 33P	**HR2 boil. mid. temp.**	**16660**	WORD	-	Heat recovery 2 temperature probe boiler middle (module)	0...13	0	num	**3**
		16661	WORD	-	Heat recovery 2 temperature probe boiler middle (I/O number)	0...12	0	num	**3**
12.048 - 34P	**HR2 boil.bott. temp.**	**16662**	WORD	-	Heat recovery 2 temperature probe boiler bottom (module)	0...13	0	num	**3**
		16663	WORD	-	Heat recovery 2 temperature probe boiler bottom (I/O number)	0...12	0	num	**3**
12.049 - 35P	**Ext.evaporator temp.**	**17937**	WORD	-	External evaporator temp.probe (module)	0...13	0	num	**3**
		17938	WORD	-	External evaporator temperature probe (I/O number)	0...12	0	num	**3**
12.050 - 36P	**Ext.evaporator press**	**17939**	WORD	-	External evaporator pressure probe (module)	0...13	0	num	**3**
		17940	WORD	-	External evaporator pressure probe (I/O number)	0...12	0	num	**3**
12.051 - 36L	**Ext.evap. press.4mA**	**17941**	WORD	-1	External evaporator pressure analog input lower limit	-1...36H	0	bar/ psi	**3**
12.052 - 36H	**Ext.evap. press.20mA**	**17942**	WORD	-1	External evaporator pressure analog input upper limit	36L...160	0	bar/ psi	**3**
3-12-1-7 Receiver									
12.053 - 37P	**HP receiver press.**	**16616**	WORD	-	Receiver pressure probe (module)	0...13	1	num	**3**
		16617	WORD	-	Receiver pressure probe (I/O number)	0...12	4	num	**3**
12.054 - 37L	**HP receiver P 4mA**	**16618**	WORD	-1	Receiver pressure analog input lower limit	-1...37H	0	bar/ psi	**3**
12.055 - 37H	**HP receiver P 20mA**	**16619**	WORD	-1	Receiver pressure analog input upper limit	37L...160.0	50.0	bar/ psi	**3**

LABEL	LABEL	PAR. VALUE ADDRESS	DATA SIZE	CPL	DESCRIPTION	RANGE	DEFAULT	M.U.	LEVEL
12.056 - 38P	**CO2 level**	**18215**	WORD	-	CO2 liquid level probe (module)	0...13	0	num	**3**
		18216	WORD	-	CO2 liquid level probe (I/O number)	0...12	0	num	**3**
12.057 - 41P	**ST suction temp.**	**18300**	WORD	-	PC line suction temperature probe (module)	0...13	1	num	**3**
		18301	WORD	-	PC line suction temperature probe (I/O number)	0...12	10	num	**3**
3-12-1-8 Heat Exchanger									
12.058 - 39P	**Heat exch. out temp.**	**16634**	WORD	-	Heat exchanger out temperature probe (module)	0...13	0	num	**3**
		16635	WORD	-	Heat exchanger out temperature probe (I/O number)	0...12	0	num	**3**
3-12-1-9 Oil									
12.059 - 40P	**Oil temp.**	**16666**	WORD	-	Oil temperature probe (module)	0...13	0	num	**3**
		16667	WORD	-	Oil temperature probe (I/O number)	0...12	0	num	**3**
12.262 - 42P	**Oil Receiver P.**	**16451**	WORD	-	Oil Pressure Probe (module)	0...13	0	num	**3**
		16452	WORD	-	Oil Pressure Probe (I/O number)	0...12	0	num	**3**
12.263-42L	**Max Oil press**	**16453**	WORD	-1	Oil pressure analog input lower limit	-14,5...2320,0	0	bar/ psi	**3**
12.263-42H	**Min Oil press**	**16454**	WORD	-1	Oil pressure analog input upper limit	-14,5...2320,0	0	bar/ psi	**3**
3-12-3 DI Allocation									
DI analogue input allocation parameter values • (module) 0=not configured, 1=EWCM, 2=EXP1...13=EXP12 • (I/O number) 0=not configured, 1=DI1, 2=DI2,...12=DI12, 13=AI1, ... 24 = AI12									
3-12-3-1 System									
12.060 - i01	**High pressure 107**	**16668**	WORD	-	High pressure 107 digital input (module).	0...13	0	num	**3**
		16669	WORD	-	High pressure 107 digital input (I/O number).	-24...24	0	num	**3**

LABEL	LABEL	PAR. VALUE ADDRESS	DATA SIZE	CPL	DESCRIPTION	RANGE	DEFAULT	M.U.	LEVEL
12.061 - i02	**High pressure 105**	**16670**	WORD	-	High pressure 105 digital input (module).	0...13	0	num	**3**
		16671	WORD	-	High pressure 105 digital input (I/O number).	-24...24	0	num	**3**
12.062 - i03	**General**	**16672**	WORD	-	General alarm digital input (module)	0...13	1	num	**3**
		16673	WORD	-	General alarm digital input (I/O number)	-24...24	-1	num	**3**
12.063 - i04	**Power limitation**	**16674**	WORD	-	Power limitation digital input (module)	0...13	0	num	**3**
		16675	WORD	-	Power limitation digital input (I/O number)	-24...24	0	num	**3**
12.064 - i05	**Set compensation**	**18233**	WORD	-	Economy digital input (module).	0...13	0	num	**3**
		18234	WORD	-	Economy digital input (I/O number).	-24...24	0	num	**3**
12.065 - i06	**Stand-by**	**17909**	WORD	-	Stand-by digital input (module)	0...13	0	num	**3**
		17910	WORD	-	Stand-by digital input (I/O number)	-24...24	0	num	**3**
12.066 - i07	**Aux 1**	**18217**	WORD	-	Aux 1 digital input (module)	0...13	0	num	**3**
		18218	WORD	-	Aux 1 digital input (I/O number)	-24...24	0	num	**3**
12.067 - i08	**Aux 2**	**18219**	WORD	-	Aux 2 digital input (module)	0...13	0	num	**3**
		18220	WORD	-	Aux 2 digital input (I/O number)	-24...24	0	num	**3**
12.068 - i09	**Aux 3**	**18221**	WORD	-	Aux 3 digital input (module)	0...13	0	num	**3**
		18222	WORD	-	Aux 3 digital input (I/O number)	-24...24	0	num	**3**
12.069 - i10	**Aux 4**	**18223**	WORD	-	Aux 4 digital input (module)	0...13	0	num	**3**
		18224	WORD	-	Aux 4 digital input (I/O number)	-24...24	0	num	**3**
12.070 - i11	**GP input 1**	**16407**	WORD	-	General purpose regulator 1 digital input (module)	0...13	0	num	**3**
		16401	WORD	-	General purpose regulator 1 digital input (I/O number)	-24...24	0	num	**3**
12.071 - i12	**GP input 2**	**16420**	WORD	-	General purpose regulator 2 digital input (module)	0...13	0	num	**3**
		16412	WORD	-	General purpose regulator 2 digital input (I/O number)	-24...24	0	num	**3**

LABEL	LABEL	PAR. VALUE ADDRESS	DATA SIZE	CPL	DESCRIPTION	RANGE	DEFAULT	M.U.	LEVEL
12.072 - i13	**GP input 3**	**16427**	WORD	-	General purpose regulator 3 digital input (module)	0...13	0	num	**3**
		16418	WORD	-	General purpose regulator 3 digital input (I/O number)	-24...24	0	num	**3**
12.073 - i14	**GP input 4**	**16507**	WORD	-	General purpose regulator 4 digital input (module)	0...13	0	num	**3**
		16419	WORD	-	General purpose regulator 4 digital input (I/O number)	-24...24	0	num	**3**
3-12-3-2 Low Temp									
12.074 - i15	**LT low press. alarm**	**16700**	WORD	-	LT line digital input low pressure (module)	0...13	1	num	**3**
		16701	WORD	-	LT line digital input low pressure (I/O number)	-24...24	3	num	**3**
12.075 - i16	**LT inverter 1 motor protection**	**16702**	WORD	-	LT line digital input inverter motor protection (module)	0...13	0	num	**3**
		16703	WORD	-	LT line digital input inverter motor protection (I/O number)	-24...24	0	num	**3**
12.076 - i17	**LT compr. 1 thermal**	**16710**	WORD	-	LT line compressor 1 digital input thermal switch (module)	0...13	0	num	**3**
		16711	WORD	-	LT line compressor 1 digital input thermal switch (I/O number)	-24...24	0	num	**3**
12.077 - i18	**LT compr. 1 HP**	**16712**	WORD	-	LT line compressor 1 digital input high pressure (module)	0...13	0	num	**3**
		16713	WORD	-	LT line compressor 1 digital input high pressure (I/O number)	-24...24	0	num	**3**
12.078 - i19	**LT compr. 1 oil high**	**17877**	WORD	-	LT line compressor 1 digital input oil high (module)	0...13	0	num	**3**
		17878	WORD	-	LT line compressor 1 digital input oil high (I/O number)	-24...24	0	num	**3**
12.079 - i20	**LT compr. 1 oil low**	**17879**	WORD	-	LT line compressor 1 digital input oil low (module)	0...13	0	num	**3**
		17880	WORD	-	LT line compressor 1 digital input oil low (I/O number)	-24...24	0	num	**3**
12.080 - i21	**LT compr.1 gen.alarm**	**16716**	WORD	-	LT line compressor 1 digital input general alarm (module)	0...13	1	num	**3**
		16717	WORD	-	LT line compressor 1 digital input general alarm (I/O number)	-24...24	-10	num	**3**
12.081 - i22	**LT compr. 2 thermal**	**16718**	WORD	-	LT line compressor 2 digital input thermal switch (module)	0...13	0	num	**3**
		16719	WORD	-	LT line compressor 2 digital input thermal switch (I/O number)	-24...24	0	num	**3**

LABEL	LABEL	PAR. VALUE ADDRESS	DATA SIZE	CPL	DESCRIPTION	RANGE	DEFAULT	M.U.	LEVEL
12.082 - i23	**LT compr. 2 HP**	**16720**	WORD	-	LT line compressor 2 digital input high pressure (module)	0...13	0	num	**3**
		16721	WORD	-	LT line compressor 2 digital input high pressure (I/O number)	-24...24	0	num	**3**
12.083 - i24	**LT compr. 2 oil high**	**17881**	WORD	-	LT line compressor 2 digital input oil high (module)	0...13	0	num	**3**
		17882	WORD	-	LT line compressor 2 digital input oil high (I/O number)	-24...24	0	num	**3**
12.084 - i25	**LT compr. 2 oil low**	**17883**	WORD	-	LT line compressor 2 digital input oil low (module)	0...13	0	num	**3**
		17884	WORD	-	LT line compressor 2 digital input oil low (I/O number)	-24...24	0	num	**3**
12.085 - i26	**LT compr.2 gen.alarm**	**16724**	WORD	-	LT line compressor 2 digital input general alarm (module)	0...13	1	num	**3**
		16725	WORD	-	LT line compressor 2 digital input general alarm (I/O number)	-24...24	-11	num	**3**
12.086 - i27	**LT compr. 3 thermal**	**16726**	WORD	-	LT line compressor 3 digital input thermal switch (module)	0...13	0	num	**3**
		16727	WORD	-	LT line compressor 3 digital input thermal switch (I/O number)	-24...24	0	num	**3**
12.087 - i28	**LT compr. 3 HP**	**16728**	WORD	-	LT line compressor 3 digital input high pressure (module)	0...13	0	num	**3**
		16729	WORD	-	LT line compressor 3 digital input high pressure (I/O number)	-24...24	0	num	**3**
12.088 - i29	**LT compr. 3 oil high**	**17885**	WORD	-	LT line compressor 3 digital input oil high (module)	0...13	0	num	**3**
		17886	WORD	-	LT line compressor 3 digital input oil high (I/O number)	-24...24	0	num	**3**
12.089 - i30	**LT compr. 3 oil low**	**17887**	WORD	-	LT line compressor 3 digital input oil low (module)	0...13	0	num	**3**
		17888	WORD	-	LT line compressor 3 digital input oil low (I/O number)	-24...24	0	num	**3**
12.090 - i31	**LT compr.3 gen.alarm**	**16732**	WORD	-	LT line compressor 3 digital input general alarm (module)	0...13	0	num	**3**
		16733	WORD	-	LT line compressor 3 digital input general alarm (I/O number)	-24...24	0	num	**3**
12.091 - i32	**LT compr. 4 thermal**	**16734**	WORD	-	LT line compressor 4 digital input thermal switch (module)	0...13	0	num	**3**
		16735	WORD	-	LT line compressor 4 digital input thermal switch (I/O number)	-24...24	0	num	**3**
12.092 - i33	**LT compr. 4 HP**	**16736**	WORD	-	LT line compressor 4 digital input high pressure (module)	0...13	0	num	**3**
		16737	WORD	-	LT line compressor 4 digital input high pressure (I/O number)	-24...24	0	num	**3**

LABEL	LABEL	PAR. VALUE ADDRESS	DATA SIZE	CPL	DESCRIPTION	RANGE	DEFAULT	M.U.	LEVEL
12.093 - i34	**LT compr. 4 oil high**	**17889**	WORD	-	LT line compressor 4 digital input oil high (module)	0...13	0	num	**3**
		17890	WORD	-	LT line compressor 4 digital input oil high (I/O number)	-24...24	0	num	**3**
12.094 - i35	**LT compr. 4 oil low**	**17891**	WORD	-	LT line compressor 4 digital input oil low (module)	0...13	0	num	**3**
		17892	WORD	-	LT line compressor 4 digital input oil low (I/O number)	-24...24	0	num	**3**
12.095 - i36	**LT compr.4 gen.alarm**	**16740**	WORD	-	LT line compressor 4 digital input general alarm (module)	0...13	0	num	**3**
		16741	WORD	-	LT line compressor 4 digital input general alarm (I/O number)	-24...24	0	num	**3**
12.096 - i37	**LT compr. 5 thermal**	**16742**	WORD	-	LT line compressor 5 digital input thermal switch (module)	0...13	0	num	**3**
		16743	WORD	-	LT line compressor 5 digital input thermal switch (I/O number)	-24...24	0	num	**3**
12.097 - i38	**LT compr. 5 HP**	**16744**	WORD	-	LT line compressor 5 digital input high pressure (module)	0...13	0	num	**3**
		16745	WORD	-	LT line compressor 5 digital input high pressure (I/O number)	-24...24	0	num	**3**
12.098 - i39	**LT compr. 5 oil high**	**17893**	WORD	-	LT line compressor 5 digital input oil high (module)	0...13	0	num	**3**
		17894	WORD	-	LT line compressor 5 digital input oil high (I/O number)	-24...24	0	num	**3**
12.099 - i40	**LT compr. 5 oil low**	**17895**	WORD	-	LT line compressor 5 digital input oil low (module)	0...13	0	num	**3**
		17896	WORD	-	LT line compressor 5 digital input oil low (I/O number)	-24...24	0	num	**3**
12.100 - i41	**LT compr.5 gen.alarm**	**16748**	WORD	-	LT line compressor 5 digital input general alarm (module)	0...13	0	num	**3**
		16749	WORD	-	LT line compressor 5 digital input general alarm (I/O number)	-24...24	0	num	**3**
12.101 - i42	**LT compr. 6 thermal**	**16750**	WORD	-	LT line compressor 6 digital input thermal switch (module)	0...13	0	num	**3**
		16751	WORD	-	LT line compressor 6 digital input thermal switch (I/O number)	-24...24	0	num	**3**
12.102 - i43	**LT compr. 6 HP**	**16752**	WORD	-	LT line compressor 6 digital input high pressure (module)	0...13	0	num	**3**
		16753	WORD	-	LT line compressor 6 digital input high pressure (I/O number)	-24...24	0	num	**3**
12.103 - i44	**LT compr. 6 oil high**	**17897**	WORD	-	LT line compressor 6 digital input oil high (module)	0...13	0	num	**3**
		17898	WORD	-	LT line compressor 6 digital input oil high (I/O number)	-24...24	0	num	**3**

LABEL	LABEL	PAR. VALUE ADDRESS	DATA SIZE	CPL	DESCRIPTION	RANGE	DEFAULT	M.U.	LEVEL
12.104 - i45	**LT compr. 6 oil low**	**17899**	WORD	-	LT line compressor 6 digital input oil low (module)	0...13	0	num	**3**
		17900	WORD	-	LT line compressor 6 digital input oil low (I/O number)	-24...24	0	num	**3**
12.105 - i46	**LT compr.6 gen.alarm**	**16756**	WORD	-	LT line compressor 6 digital input general alarm (module)	0...13	0	num	**3**
		16757	WORD	-	LT line compressor 6 digital input general alarm (I/O number)	-24...24	0	num	**3**
12.106 - i47	**LT compr. 7 thermal**	**16758**	WORD	-	LT line compressor 7 digital input thermal switch (module)	0...13	0	num	**3**
		16759	WORD	-	LT line compressor 7 digital input thermal switch (I/O number)	-24...24	0	num	**3**
12.107 - i48	**LT compr. 7 HP**	**16760**	WORD	-	LT line compressor 7 digital input high pressure (module)	0...13	0	num	**3**
		16761	WORD	-	LT line compressor 7 digital input high pressure (I/O number)	-24...24	0	num	**3**
12.108 - i49	**LT compr. 7 oil high**	**17901**	WORD	-	LT line compressor 7 digital input oil high (module)	0...13	0	num	**3**
		17902	WORD	-	LT line compressor 7 digital input oil high (I/O number)	-24...24	0	num	**3**
12.109 - i50	**LT compr. 7 oil low**	**17903**	WORD	-	LT line compressor 7 digital input oil low (module)	0...13	0	num	**3**
		17904	WORD	-	LT line compressor 7 digital input oil low (I/O number)	-24...24	0	num	**3**
12.110 - i51	**LT compr.7 gen.alarm**	**16764**	WORD	-	LT line compressor 7 digital input general alarm (module)	0...13	0	num	**3**
		16765	WORD	-	LT line compressor 7 digital input general alarm (I/O number)	-24...24	0	num	**3**
12.111 - i52	**LT compr. 8 thermal**	**16766**	WORD	-	LT line compressor 8 digital input thermal switch (module)	0...13	0	num	**3**
		16767	WORD	-	LT line compressor 8 digital input thermal switch (I/O number)	-24...24	0	num	**3**
12.112 - i53	**LT compr. 8 HP**	**16768**	WORD	-	LT line compressor 8 digital input high pressure (module)	0...13	0	num	**3**
		16769	WORD	-	LT line compressor 8 digital input high pressure (I/O number)	-24...24	0	num	**3**
12.113 - i54	**LT compr. 8 oil high**	**17905**	WORD	-	LT line compressor 8 digital input oil high (module)	0...13	0	num	**3**
		17906	WORD	-	LT line compressor 8 digital input oil high (I/O number)	-24...24	0	num	**3**

LABEL	LABEL	PAR. VALUE ADDRESS	DATA SIZE	CPL	DESCRIPTION	RANGE	DEFAULT	M.U.	LEVEL
12.114 - i55	**LT compr. 8 oil low**	**17907**	WORD	-	LT line compressor 8 digital input oil low (module)	0...13	0	num	**3**
		17908	WORD	-	LT line compressor 8 digital input oil low (I/O number)	-24...24	0	num	**3**
12.115 - i56	**LT compr.8 gen.alarm**	**16772**	WORD	-	LT line compressor 8 digital input general alarm (module)	0...13	0	num	**3**
		16773	WORD	-	LT line compressor 8 digital input general alarm (I/O number)	-24...24	0	num	**3**
3-12-3-3 HighTemp									
12.116 - i57	**One compr. HT on**	**16774**	WORD	-	HT line digital input compressors running (module)	0...13	0	num	**3**
		16775	WORD	-	HT line digital input compressors running (I/O number)	-24...24	0	num	**3**
12.117 - i58	**HT low press. alarm**	**16776**	WORD	-	HT line digital input low pressure (module)	0...13	0	num	**3**
		16777	WORD	-	HT line digital input low pressure (I/O number)	-24...24	0	num	**3**
12.118 - i59	**HT inverter 1 motor protection**	**16778**	WORD	-	HT line digital input inverter motor protection (module)	0...13	0	num	**3**
		16779	WORD	-	HT line digital input inverter motor protection (I/O number)	-24...24	0	num	**3**
12.119 - i60	**HT compr. 1 thermal**	**16786**	WORD	-	HT line compressor 1 digital input thermal switch (module)	0...13	0	num	**3**
		16787	WORD	-	HT line compressor 1 digital input thermal switch (I/O number)	-24...24	0	num	**3**
12.120 - i61	**HT compr. 1 HP**	**16788**	WORD	-	HT line compressor 1 digital input high pressure (module)	0...13	0	num	**3**
		16789	WORD	-	HT line compressor 1 digital input high pressure (I/O number)	-24...24	0	num	**3**
12.121 - i62	**HT compr. 1 oil high**	**17845**	WORD	-	HT line compressor 1 digital input oil level high (module)	0...13	0	num	**3**
		17846	WORD	-	HT line compressor 1 digital input oil level high (I/O number)	-24...24	0	num	**3**
12.122 - i63	**HT compr. 1 oil low**	**17847**	WORD	-	HT line compressor 1 digital input oil level low (module)	0...13	0	num	**3**
		17848	WORD	-	HT line compressor 1 digital input oil level low (I/O number)	-24...24	0	num	**3**
12.123 - i64	**HT compr.1 gen.alarm**	**16792**	WORD	-	HT line compressor 1 digital input general alarm (module)	0...13	1	num	**3**
		16793	WORD	-	HT line compressor 1 digital input general alarm (I/O number)	-24...24	-7	num	**3**

LABEL	LABEL	PAR. VALUE ADDRESS	DATA SIZE	CPL	DESCRIPTION	RANGE	DEFAULT	M.U.	LEVEL
12.124 - i65	**HT compr. 2 thermal**	**16794**	WORD	-	HT line compressor 2 digital input thermal switch (module)	0...13	0	num	**3**
		16795	WORD	-	HT line compressor 2 digital input thermal switch (I/O number)	-24...24	0	num	**3**
12.125 - i66	**HT compr. 2 HP**	**16796**	WORD	-	HT line compressor 2 digital input high pressure (module)	0...13	0	num	**3**
		16797	WORD	-	HT line compressor 2 digital input high pressure (I/O number)	-24...24	0	num	**3**
12.126 - i67	**HT compr. 2 oil high**	**17849**	WORD	-	HT line compressor 2 digital input oil level high (module)	0...13	0	num	**3**
		17850	WORD	-	HT line compressor 2 digital input oil level high (I/O number)	-24...24	0	num	**3**
12.127 - i68	**HT compr. 2 oil low**	**17851**	WORD	-	HT line compressor 2 digital input oil level low (module)	0...13	0	num	**3**
		17852	WORD	-	HT line compressor 2 digital input oil level low (I/O number)	-24...24	0	num	**3**
12.128 - i69	**HT compr.2 gen.alarm**	**16800**	WORD	-	HT line compressor 2 digital input general alarm (module)	0...13	1	num	**3**
		16801	WORD	-	HT line compressor 2 digital input general alarm (I/O number)	-24...24	-8	num	**3**
12.129 - i70	**HT compr. 3 thermal**	**16802**	WORD	-	HT line compressor 3 digital input thermal switch (module)	0...13	0	num	**3**
		16803	WORD	-	HT line compressor 3 digital input thermal switch (I/O number)	-24...24	0	num	**3**
12.130 - i71	**HT compr. 3 HP**	**16804**	WORD	-	HT line compressor 3 digital input high pressure (module)	0...13	0	num	**3**
		16805	WORD	-	HT line compressor 3 digital input high pressure (I/O number)	-24...24	0	num	**3**
12.131 - i72	**HT compr. 3 oil high**	**17853**	WORD	-	HT line compressor 3 digital input oil level high (module)	0...13	0	num	**3**
		17854	WORD	-	HT line compressor 3 digital input oil level high (I/O number)	-24...24	0	num	**3**
12.132 - i73	**HT compr. 3 oil low**	**17855**	WORD	-	HT line compressor 3 digital input oil level low (module)	0...13	0	num	**3**
		17856	WORD	-	HT line compressor 3 digital input oil level low (I/O number)	-24...24	0	num	**3**
12.133 - i74	**HT compr.3 gen.alarm**	**16808**	WORD	-	HT line compressor 3 digital input general alarm (module)	0...13	1	num	**3**
		16809	WORD	-	HT line compressor 3 digital input general alarm (I/O number)	-24...24	-9	num	**3**

LABEL	LABEL	PAR. VALUE ADDRESS	DATA SIZE	CPL	DESCRIPTION	RANGE	DEFAULT	M.U.	LEVEL
12.134 - i75	**HT compr. 4 thermal**	**16810**	WORD	-	HT line compressor 4 digital input thermal switch (module)	0...13	0	num	**3**
		16811	WORD	-	HT line compressor 4 digital input thermal switch (I/O number)	-24...24	0	num	**3**
12.135 - i76	**HT compr. 4 HP**	**16812**	WORD	-	HT line compressor 4 digital input high pressure (module)	0...13	0	num	**3**
		16813	WORD	-	HT line compressor 4 digital input high pressure (I/O number)	-24...24	0	num	**3**
12.136 - i77	**HT compr. 4 oil high**	**17857**	WORD	-	HT line compressor 4 digital input oil level high (module)	0...13	0	num	**3**
		17858	WORD	-	HT line compressor 4 digital input oil level high (I/O number)	-24...24	0	num	**3**
12.137 - i78	**HT compr. 4 oil low**	**17859**	WORD	-	HT line compressor 4 digital input oil level low (module)	0...13	0	num	**3**
		17860	WORD	-	HT line compressor 4 digital input oil level low (I/O number)	-24...24	0	num	**3**
12.138 - i79	**HT compr.4 gen.alarm**	**16816**	WORD	-	HT line compressor 4 digital input general alarm (module)	0...13	0	num	**3**
		16817	WORD	-	HT line compressor 4 digital input general alarm (I/O number)	-24...24	0	num	**3**
12.139 - i80	**HT compr. 5 thermal**	**16818**	WORD	-	HT line compressor 5 digital input thermal switch (module)	0...13	0	num	**3**
		16819	WORD	-	HT line compressor 5 digital input thermal switch (I/O number)	-24...24	0	num	**3**
12.140 - i81	**HT compr. 5 HP**	**16820**	WORD	-	HT line compressor 5 digital input high pressure (module)	0...13	0	num	**3**
		16821	WORD	-	HT line compressor 5 digital input high pressure (I/O number)	-24...24	0	num	**3**
12.141 - i82	**HT compr. 5 oil high**	**17861**	WORD	-	HT line compressor 5 digital input oil level high (module)	0...13	0	num	**3**
		17862	WORD	-	HT line compressor 5 digital input oil level high (I/O number)	-24...24	0	num	**3**

LABEL	LABEL	PAR. VALUE ADDRESS	DATA SIZE	CPL	DESCRIPTION	RANGE	DEFAULT	M.U.	LEVEL
12.142 - i83	**HT compr. 5 oil low**	**17863**	WORD	-	HT line compressor 5 digital input oil level low (module)	0...13	0	num	**3**
		17864	WORD	-	HT line compressor 5 digital input oil level low (I/O number)	-24...24	0	num	**3**
12.143 - i84	**HT compr.5 gen.alarm**	**16824**	WORD	-	HT line compressor 5 digital input general alarm (module)	0...13	0	num	**3**
		16825	WORD	-	HT line compressor 5 digital input general alarm (I/O number)	-24...24	0	num	**3**
12.144 - i85	**HT compr. 6 thermal**	**16826**	WORD	-	HT line compressor 6 digital input thermal switch (module)	0...13	0	num	**3**
		16827	WORD	-	HT line compressor 6 digital input thermal switch (I/O number)	-24...24	0	num	**3**
12.145 - i86	**HT compr. 6 HP**	**16828**	WORD	-	HT line compressor 6 digital input high pressure (module)	0...13	0	num	**3**
		16829	WORD	-	HT line compressor 6 digital input high pressure (I/O number)	-24...24	0	num	**3**
12.146 - i87	**HT compr. 6 oil high**	**17865**	WORD	-	HT line compressor 6 digital input oil level high (module)	0...13	0	num	**3**
		17866	WORD	-	HT line compressor 6 digital input oil level high (I/O number)	-24...24	0	num	**3**
12.147 - i88	**HT compr. 6 oil low**	**17867**	WORD	-	HT line compressor 6 digital input oil level low (module)	0...13	0	num	**3**
		17868	WORD	-	HT line compressor 6 digital input oil level low (I/O number)	-24...24	0	num	**3**
12.148 - i89	**HT compr.6 gen.alarm**	**16832**	WORD	-	HT line compressor 6 digital input general alarm (module)	0...13	0	num	**3**
		16833	WORD	-	HT line compressor 6 digital input general alarm (I/O number)	-24...24	0	num	**3**

LABEL	LABEL	PAR. VALUE ADDRESS	DATA SIZE	CPL	DESCRIPTION	RANGE	DEFAULT	M.U.	LEVEL
12.149 - i90	**HT compr. 7 thermal**	**16834**	WORD	-	HT line compressor 7 digital input thermal switch (module)	0...13	0	num	**3**
		16835	WORD	-	HT line compressor 7 digital input thermal switch (I/O number)	-24...24	0	num	**3**
12.150 - i91	**HT compr. 7 HP**	**16836**	WORD	-	HT line compressor 7 digital input high pressure (module)	0...13	0	num	**3**
		16837	WORD	-	HT line compressor 7 digital input high pressure (I/O number)	-24...24	0	num	**3**
12.151 - i92	**HT compr. 7 oil high**	**17869**	WORD	-	HT line compressor 7 digital input oil level high (module)	0...13	0	num	**3**
		17870	WORD	-	HT line compressor 7 digital input oil level high (I/O number)	-24...24	0	num	**3**
12.152 - i93	**HT compr. 7 oil low**	**17871**	WORD	-	HT line compressor 7 digital input oil level low (module)	0...13	0	num	**3**
		17872	WORD	-	HT line compressor 7 digital input oil level low (I/O number)	-24...24	0	num	**3**
12.153 - i94	**HT compr.7 gen.alarm**	**16840**	WORD	-	HT line compressor 7 digital input general alarm (module)	0...13	0	num	**3**
		16841	WORD	-	HT line compressor 7 digital input general alarm (I/O number)	-24...24	0	num	**3**
12.154 - i95	**HT compr. 8 thermal**	**16842**	WORD	-	HT line compressor 8 digital input thermal switch (module)	0...13	0	num	**3**
		16843	WORD	-	HT line compressor 8 digital input thermal switch (I/O number)	-24...24	0	num	**3**
12.155 - i96	**HT compr. 8 HP**	**16844**	WORD	-	HT line compressor 8 digital input high pressure (module)	0...13	0	num	**3**
		16845	WORD	-	HT line compressor 8 digital input high pressure (I/O number)	-24...24	0	num	**3**

LABEL	LABEL	PAR. VALUE ADDRESS	DATA SIZE	CPL	DESCRIPTION	RANGE	DEFAULT	M.U.	LEVEL
12.156 - i97	**HT compr. 8 oil high**	**17873**	WORD	-	HT line compressor 8 digital input oil level high (module)	0...13	0	num	**3**
		17874	WORD	-	HT line compressor 8 digital input oil level high (I/O number)	-24...24	0	num	**3**
12.157 - i98	**HT compr. 8 oil low**	**17875**	WORD	-	HT line compressor 8 digital input oil level low (module)	0...13	0	num	**3**
		17876	WORD	-	HT line compressor 8 digital input oil level low (I/O number)	-24...24	0	num	**3**
12.158 - i99	**HT compr.8 gen.alarm**	**16848**	WORD	-	HT line compressor 8 digital input general alarm (module)	0...13	0	num	**3**
		16849	WORD	-	HT line compressor 8 digital input general alarm (I/O number)	-24...24	0	num	**3**
3-12-3-4 High Pressure									
12.159 - i100	**HP valve alarm**	**17919**	WORD	-	HP valve digital input alarm (module)	0...13	0	num	**3**
		17920	WORD	-	HP valve digital input alarm (I/O number)	-24...24	0	num	**3**
3-12-3-5 Gas Cooler									
12.160 - i101	**Gascooler alarm**	**16862**	WORD	-	Gascooler digital input alarm (module)	0...13	-	num	**3**
		16863	WORD	-	Gascooler digital input alarm (I/O number)	-24...24	-6	num	**3**
12.161 - i102	**Gascooler inv. alarm**	**16864**	WORD	-	Gascooler digital input inverter alarm (module)	0...13	0	num	**3**
		16865	WORD	-	Gascooler digital input inverter alarm (I/O number)	-24...24	0	num	**3**
12.162 - i103	**Gascooler fan 1**	**16854**	WORD	-	Gascooler fan 1 digital input alarm (module)	0...13	0	num	**3**
		16855	WORD	-	Gascooler fan 1 digital input alarm (I/O number)	-24...24	0	num	**3**
12.163 - i104	**Gascooler fan 2**	**16856**	WORD	-	Gascooler fan 2 digital input alarm (module)	0...13	0	num	**3**
		16857	WORD	-	Gascooler fan 2 digital input alarm (I/O number)	-24...24	0	num	**3**

LABEL	LABEL	PAR. VALUE ADDRESS	DATA SIZE	CPL	DESCRIPTION	RANGE	DEFAULT	M.U.	LEVEL
12.164 - i105	**Gascooler fan 3**	**16858**	WORD	-	Gascooler fan 3 digital input alarm (module)	0...13	0	num	**3**
		16859	WORD	-	Gascooler fan 3 digital input alarm (I/O number)	-24...24	0	num	**3**
12.165 - i106	**Gascooler fan 4**	**16860**	WORD	-	Gascooler fan 4 digital input alarm (module)	0...13	0	num	**3**
		16861	WORD	-	Gascooler fan 4 digital input alarm (I/O number)	-24...24	0	num	**3**
12.166 - i107	**Anti noise**	**16676**	WORD	-	Anti noise digital input (module)	0...13	0	num	**3**
		16677	WORD	-	Anti noise digital input (I/O number)	-24...24	0	num	**3**
3-12-3-6 Heat Recovery									
12.167 - i108	**HR1 activation**	**16692**	WORD	-	Heat recovery 1 digital input activation (module)	0...13	0	num	**3**
		16693	WORD	-	Heat recovery 1 digital input activation (I/O number)	-24...24	0	num	**3**
12.168 - i109	**HR1 alarm**	**16694**	WORD	-	Heat recovery 1 digital input alarm (module)	0...13	0	num	**3**
		16695	WORD	-	Heat recovery 1 digital input alarm (I/O number)	-24...24	0	num	**3**
12.169 - i110	**HR2 activation**	**16696**	WORD	-	Heat recovery 2 digital input activation (module)	0...13	0	num	**3**
		16697	WORD	-	Heat recovery 2 digital input activation (I/O number)	-24...24	0	num	**3**
12.170 - i111	**HR2 alarm**	**16698**	WORD	-	Heat recovery 2 digital input alarm (module)	0...13	0	num	**3**
		16699	WORD	-	Heat recovery 2 digital input alarm (I/O number)	-24...24	0	num	**3**
3-12-3-7 Receiver									
12.171 - i112	**Receiv.MP valve fail**	**16850**	WORD	-	Receiver valve digital input alarm (module)	0...13	0	num	**3**
		16851	WORD	-	Receiver valve digital input alarm (I/O number)	-24...24	0	num	**3**
12.172 - i113	**ST inverter 1 motor protection**	**18207**	WORD	-	PC line digital input inverter motor protection (module)	0...13	0	num	**3**
		18209	WORD	-	PC line digital input inverter motor protection (I/O number)	-24...24	0	num	**3**

LABEL	LABEL	PAR. VALUE ADDRESS	DATA SIZE	CPL	DESCRIPTION	RANGE	DEFAULT	M.U.	LEVEL
12.173 - i114	**ST compr. 1 thermal**	**18159**	WORD	-	PC line digital input inverter motor protection (I/O number)	0...13	0	num	**3**
		18163	WORD	-	PC line compressor 1 digital input thermal switch (I/O number)	-24...24	0	num	**3**
12.174 - i115	**ST compr. 1 HP**	**18167**	WORD	-	PC line compressor 1 digital input high pressure (module)	0...13	0	num	**3**
		18171	WORD	-	PC line compressor 1 digital input high pressure (I/O number)	-24...24	0	num	**3**
12.175 - i116	**ST compr. 1 oil high**	**18191**	WORD	-	PC line compressor 1 digital input oil level high (module)	0...13	0	num	**3**
		18195	WORD	-	PC line compressor 1 digital input oil level high (I/O number)	-24...24	0	num	**3**
12.176 - i117	**ST compr. 1 oil low**	**18199**	WORD	-	PC line compressor 1 digital input oil level low (module)	0...13	0	num	**3**
		18203	WORD	-	PC line compressor 1 digital input oil level low (I/O number)	-24...24	0	num	**3**
12.177 - i118	**ST compr.1 gen.alarm**	**18183**	WORD	-	PC line compressor 1 digital input general alarm (module)	0...13	0	num	**3**
		18187	WORD	-	PC line compressor 1 digital input general alarm (I/O number)	-24...24	0	num	**3**
12.178 - i119	**ST compr. 2 thermal**	**18160**	WORD	-	PC line compressor 2 digital input thermal switch (module)	0...13	0	num	**3**
		18164	WORD	-	PC line compressor 2 digital input thermal switch (I/O number)	-24...24	0	num	**3**
12.179 - i120	**ST compr. 2 HP**	**18168**	WORD	-	PC line compressor 2 digital input high pressure (module)	0...13	0	num	**3**
		18172	WORD	-	PC line compressor 2 digital input high pressure (I/O number)	-24...24	0	num	**3**

LABEL	LABEL	PAR. VALUE ADDRESS	DATA SIZE	CPL	DESCRIPTION	RANGE	DEFAULT	M.U.	LEVEL
12.180 - i121	**ST compr. 2 oil high**	**18192**	WORD	-	PC line compressor 2 digital input oil level high (module)	0...13	0	num	**3**
		18196	WORD	-	PC line compressor 2 digital input oil level high (I/O number)	-24...24	0	num	**3**
12.181 - i122	**ST compr. 2 oil low**	**18200**	WORD	-	PC line compressor 2 digital input oil level low (module)	0...13	0	num	**3**
		18204	WORD	-	PC line compressor 2 digital input oil level low (I/O number)	-24...24	0	num	**3**
12.182 - i123	**ST compr.2 gen.alarm**	**18184**	WORD	-	PC line compressor 2 digital input general alarm (module)	0...13	0	num	**3**
		18188	WORD	-	PC line compressor 2 digital input general alarm (I/O number)	-24...24	0	num	**3**
12.183 - i124	**ST compr. 3 thermal**	**18161**	WORD	-	PC line compressor 3 digital input thermal switch (module)	0...13	0	num	**3**
		18165	WORD	-	PC line compressor 3 digital input thermal switch (I/O number)	-24...24	0	num	**3**
12.184 - i125	**ST compr. 3 HP**	**18169**	WORD	-	PC line compressor 3 digital input high pressure (module)	0...13	0	num	**3**
		18173	WORD	-	PC line compressor 3 digital input high pressure (I/O number)	-24...24	0	num	**3**
12.185 - i126	**ST compr. 3 oil high**	**18193**	WORD	-	PC line compressor 3 digital input oil level high (module)	0...13	0	num	**3**
		18197	WORD	-	PC line compressor 3 digital input oil level high (I/O number)	-24...24	0	num	**3**

LABEL	LABEL	PAR. VALUE ADDRESS	DATA SIZE	CPL	DESCRIPTION	RANGE	DEFAULT	M.U.	LEVEL
12.186 - i127	**ST compr. 3 oil low**	**18201**	WORD	-	PC line compressor 3 digital input oil level low (module)	0...13	0	num	**3**
		18205	WORD	-	PC line compressor 3 digital input oil level low (I/O number)	-24...24	0	num	**3**
12.187 - i128	**ST compr.3 gen.alarm**	**18185**	WORD	-	PC line compressor 3 digital input general alarm (module)	0...13	0	num	**3**
		18189	WORD	-	PC line compressor 3 digital input general alarm (I/O number)	-24...24	0	num	**3**
12.188 - i129	**ST compr. 4 thermal**	**18162**	WORD	-	PC line compressor 4 digital input thermal switch (module)	0...13	0	num	**3**
		18166	WORD	-	PC line compressor 4 digital input thermal switch (I/O number)	-24...24	0	num	**3**
12.189 - i130	**ST compr. 4 HP**	**18170**	WORD	-	PC line compressor 4 digital input high pressure (module)	0...13	0	num	**3**
		18174	WORD	-	PC line compressor 4 digital input high pressure (I/O number)	-24...24	0	num	**3**
12.190 - i131	**ST compr. 4 oil high**	**18194**	WORD	-	PC line compressor 4 digital input oil level high (module)	0...13	0	num	**3**
		18198	WORD	-	PC line compressor 4 digital input oil level high (I/O number)	-24...24	0	num	**3**
12.191 - i132	**ST compr. 4 oil low**	**18202**	WORD	-	PC line compressor 4 digital input oil level low (module)	0...13	0	num	**3**
		18206	WORD	-	PC line compressor 4 digital input oil level low (I/O number)	-24...24	0	num	**3**
12.192 - i133	**ST compr.4 gen.alarm**	**18186**	WORD	-	PC line compressor 4 digital input general alarm (module)	0...13	0	num	**3**
		18190	WORD	-	PC line compressor 4 digital input general alarm (I/O number)	-24...24	0	num	**3**

LABEL	LABEL	PAR. VALUE ADDRESS	DATA SIZE	CPL	DESCRIPTION	RANGE	DEFAULT	M.U.	LEVEL
12.193 - i134	**CO2 level 1**	**16678**	WORD	-	CO2 level 1 digital input (module)	0...13	1	num	**3**
		16679	WORD	-	CO2 level 1 digital input (I/O number)	-24...24	12	num	**3**
12.194 - i135	**CO2 level 2**	**16680**	WORD	-	CO2 level 2 digital input (module)	0...13	0	num	**3**
		16681	WORD	-	CO2 level 2 digital input (I/O number)	-24...24	0	num	**3**
12.195 - i136	**CO2 level 3**	**16682**	WORD	-	CO2 level 3 digital input (module)	0...13	0	num	**3**
		16683	WORD	-	CO2 level 3 digital input (I/O number)	-24...24	0	num	**3**
12.196 - i137	**CO2 level 4**	**16684**	WORD	-	CO2 level 4 digital input (module)	0...13	0	num	**3**
		16685	WORD	-	CO2 level 4 digital input (I/O number)	-24...24	0	num	**3**
12.197 - i138	**CO2 level 5**	**16686**	WORD	-	CO2 level 5 digital input (module)	0...13	0	num	**3**
		16687	WORD	-	CO2 level 5 digital input (I/O number)	-24...24	0	num	**3**
12.198 - i142	**One compr. ST on**	**18297**	WORD	-	PC line digital input compressors running (module)	0...13	0	num	**3**
		18298	WORD	-	PC line digital input compressors running (I/O number)	-24...24	0	num	**3**
3-12-3-8 Heat Exchanger									
12.199 - i139	**Heat exch. alarm**	**17917**	WORD	-	Heat exchanger digital input alarm (module)	0...13	0	num	**3**
		17918	WORD	-	Heat exchanger digital input alarm (I/O number)	-24...24	0	num	**3**

LABEL	LABEL	PAR. VALUE ADDRESS	DATA SIZE	CPL	DESCRIPTION	RANGE	DEFAULT	M.U.	LEVEL
3-12-3-9 Oil									
12.200 - i140	**Oil separator**	**16690**	WORD	-	Oil separator digital input (module)	0...13	0	num	**3**
		16691	WORD	-	Oil separator digital input (I/O number)	-24...24	0	num	**3**
12.201 - i141	**Oil level**	**18283**	WORD	-	Oil level digital input (module)	0...13	0	num	**3**
		18284	WORD	-	Oil level digital input (I/O number)	-24...24	0	num	**3**
3-12 IO Allocation									
3-12-4 DO Allocation									
DO digital output allocation parameter values • (module) 0=not configured, 1=EWCM, 2=EXP1...13=EXP12 • (I/O number) 0=not configured, 1=DO1, 2=DO2,...12=DO12 (the "-" sign inverts the output polarity)									
12.202 - d01	**Severe emergency**	**16866**	WORD	-	Severe emergency digital output (module)	0...13	0	num	**3**
		16867	WORD	-	Severe emergency digital output (I/O number)	-12...12	0	num	**3**
12.203 - d02	**Emergency stop**	**16868**	WORD	-	Emergency digital output (module)	0...13	0	num	**3**
		16869	WORD	-	Emergency digital output (I/O number)	-12...12	0	num	**3**
12.204 - d03	**Machine room**	**17933**	WORD	-	Engine room digital output (module)	0...13	0	num	**3**
		17934	WORD	-	Engine room digital output (I/O number)	-12...12	0	num	**3**
12.205 - d04	**Electrical cabinet**	**17935**	WORD	-	Electrical cabinet digital output (module)	0...13	0	num	**3**
		17936	WORD	-	Electrical cabinet digital output (I/O number)	-12...12	0	num	**3**
12.206 - d05	**GP regulator 1**	**18056**	WORD	-	General purpose regulator GP 1 digital output (module)	0...13	0	num	**3**
		18057	WORD	-	General purpose regulator GP 1 digital output (I/O number)	-12...12	0	num	**3**
12.207 - d06	**GP regulator 2**	**18058**	WORD	-	General purpose regulator GP 2 digital output (module)	0...13	0	num	**3**
		18059	WORD	-	General purpose regulator GP 2 digital output (I/O number)	-12...12	0	num	**3**

LABEL	LABEL	PAR. VALUE ADDRESS	DATA SIZE	CPL	DESCRIPTION	RANGE	DEFAULT	M.U.	LEVEL
12.208 - d07	**GP regulator 3**	**18060**	WORD	-	General purpose regulator GP 3 digital output (module)	0...13	0	num	**3**
		18061	WORD	-	General purpose regulator GP 3 digital output (I/O number)	-12...12	0	num	**3**
12.209 - d08	**GP regulator 4**	**18062**	WORD	-	General purpose regulator GP 4 digital output (module)	0...13	0	num	**3**
		18063	WORD	-	General purpose regulator GP 4 digital output (I/O number)	-12...12	0	num	**3**
12.210 - d09	**Aux 1**	**18225**	WORD	-	Aux 1 digital output (module)	0...13	0	num	**3**
		18226	WORD	-	Aux 1 digital output (I/O number)	-12...12	0	num	**3**
12.211 - d10	**Aux 2**	**18227**	WORD	-	Aux 2 digital output (module)	0...13	0	num	**3**
		18228	WORD	-	Aux 2 digital output (I/O number)	-12...12	0	num	**3**
12.212 - d11	**Aux 3**	**18229**	WORD	-	Aux 3 digital output (module)	0...13	0	num	**3**
		18230	WORD	-	Aux 3 digital output (I/O number)	-12...12	0	num	**3**
12.213 - d12	**Aux 4**	**18231**	WORD	-	Aux 4 digital output (module)	0...13	0	num	**3**
		18232	WORD	-	Aux 4 digital output (I/O number)	-12...12	0	num	**3**
12.214 - d13	**LT compr. 1 enable**	**16908**	WORD	-	LT line compressor 1 digital output activation (module)	0...13	1	num	**3**
		16909	WORD	-	LT line compressor 1 digital output activation (I/O number)	-12...12	5	num	**3**
12.215 - d14	**LT compr. 2 enable**	**16910**	WORD	-	LT line compressor 2 digital output activation (module)	0...13	1	num	**3**
		16911	WORD	-	LT line compressor 2 digital output activation (I/O number)	-12...12	8	num	**3**
12.216 - d15	**LT compr. 3 enable**	**16912**	WORD	-	LT line compressor 3 digital output activation (module)	0...13	0	num	**3**
		16913	WORD	-	LT line compressor 3 digital output activation (I/O number)	-12...12	0	num	**3**
12.217 - d16	**LT compr. 4 enable**	**16914**	WORD	-	LT line compressor 4 digital output activation (module)	0...13	0	num	**3**
		16915	WORD	-	LT line compressor 4 digital output activation (I/O number)	-12...12	0	num	**3**

LABEL	LABEL	PAR. VALUE ADDRESS	DATA SIZE	CPL	DESCRIPTION	RANGE	DEFAULT	M.U.	LEVEL
12.218 - d17	**LT compr. 5 enable**	**16916**	WORD	-	LT line compressor 5 digital output activation (module)	0...13	0	num	**3**
		16917	WORD	-	LT line compressor 5 digital output activation (I/O number)	-12...12	0	num	**3**
12.219 - d18	**LT compr. 6 enable**	**16918**	WORD	-	LT line compressor 6 digital output activation (module)	0...13	0	num	**3**
		16919	WORD	-	LT line compressor 6 digital output activation (I/O number)	-12...12	0	num	**3**
12.220 - d19	**LT compr. 7 enable**	**16920**	WORD	-	LT line compressor 7 digital output activation (module)	0...13	0	num	**3**
		16921	WORD	-	LT line compressor 7 digital output activation (I/O number)	-12...12	0	num	**3**
12.221 - d20	**LT compr. 8 enable**	**16922**	WORD	-	LT line compressor 8 digital output activation (module)	0...13	0	num	**3**
		16923	WORD	-	LT line compressor 8 digital output activation (I/O number)	-12...12	0	num	**3**
12.223 - d22	**One compr. HT on**	**16870**	WORD	-	HT line digital output compressors running (module)	0...13	1	num	**3**
		16871	WORD	-	HT line digital output compressors running (I/O number)	-12...12	12	num	**3**
12.224 - d23	**HT bypass valve**	**16876**	WORD	-	HT line digital output valve bypass (module)	0...13	0	num	**3**
		16877	WORD	-	HT line digital output valve bypass (I/O number)	-12...12	0	num	**3**
12.225 - d24	**HT compr. 1 enable**	**16882**	WORD	-	HT line compressor 1 digital output activation (module)	0...13	1	num	**3**
		16883	WORD	-	HT line compressor 1 digital output activation (I/O number)	-12...12	2	num	**3**
12.226 - d25	**HT compr. 2 enable**	**16884**	WORD	-	HT line compressor 2 digital output activation (module)	0...13	1	num	**3**
		16885	WORD	-	HT line compressor 2 digital output activation (I/O number)	-12...12	3	num	**3**
12.227 - d26	**HT compr. 3 enable**	**16886**	WORD	-	HT line compressor 3 digital output activation (module)	0...13	1	num	**3**
		16887	WORD	-	HT line compressor 3 digital output activation (I/O number)	-12...12	4	num	**3**
12.228 - d27	**HT compr. 4 enable**	**16888**	WORD	-	HT line compressor 4 digital output activation (module)	0...13	0	num	**3**
		16889	WORD	-	HT line compressor 4 digital output activation (I/O number)	-12...12	0	num	**3**
12.229 - d28	**HT compr. 5 enable**	**16890**	WORD	-	HT line compressor 5 digital output activation (module)	0...13	0	num	**3**
		16891	WORD	-	HT line compressor 5 digital output activation (I/O number)	-12...12	0	num	**3**

LABEL	LABEL	PAR. VALUE ADDRESS	DATA SIZE	CPL	DESCRIPTION	RANGE	DEFAULT	M.U.	LEVEL
12.230 - d29	**HT compr. 6 enable**	**16892**	WORD	-	HT line compressor 6 digital output activation (module)	0...13	0	num	**3**
		16893	WORD	-	HT line compressor 6 digital output activation (I/O number)	-12...12	0	num	**3**
12.231 - d30	**HT compr. 7 enable**	**16894**	WORD	-	HT line compressor 7 digital output activation (module)	0...13	0	num	**3**
		16895	WORD	-	HT line compressor 7 digital output activation (I/O number)	-12...12	0	num	**3**
12.232 - d31	**HT compr. 8 enable**	**16896**	WORD	-	HT line compressor 8 digital output activation (module)	0...13	0	num	**3**
		16897	WORD	-	HT line compressor 8 digital output activation (I/O number)	-12...12	0	num	**3**
12.233 - d32	**HT hot gas dump**	**17945**	WORD	-	HT line digital output hot gas dump (module)	0...13	0	num	**3**
		17946	WORD	-	HT line digital output hot gas dump (I/O number)	-12...12	0	num	**3**
12.234 - d33	**HP valve enable**	**18003**	WORD	-	HP valve digital output activation (module)	0...13	1	num	**3**
		18004	WORD	-	HP valve digital output activation (I/O number)	-12...12	-9	num	**3**
12.261 - d50	**HP valve synchr.**	**16898**	WORD	-	HP valve digital output synchronization (module)	0...13	1	num	**3**
		16899	WORD	-	HP valve digital output synchronization (I/O number)	-12...12	-9	num	**3**
12.235 - d34	**Fan 1**	**16936**	WORD	-	Gascooler fan 1 digital output activation (module)	0...13	0	num	**3**
		16937	WORD	-	Gascooler fan 1 digital output activation (I/O number)	-12...12	0	num	**3**
12.236 - d35	**Fan 2**	**16938**	WORD	-	Gascooler fan 2 digital output activation (module)	0...13	0	num	**3**
		16939	WORD	-	Gascooler fan 2 digital output activation (I/O number)	-12...12	0	num	**3**
12.237 - d36	**Fan 3**	**17984**	WORD	-	Gascooler fan 3 digital output activation (module)	0...13	0	num	**3**
		17985	WORD	-	Gascooler fan 3 digital output activation (I/O number)	-12...12	0	num	**3**
12.238 - d37	**Fan 4**	**17986**	WORD	-	Gascooler fan 4 digital output activation (module)	0...13	0	num	**3**
		17987	WORD	-	Gascooler fan 4 digital output activation (I/O number)	-12...12	0	num	**3**
12.263 - d52	**GC fan act**	**16523**	WORD	-	Gascooler digital output fan activation (module)	0...13	0	num	**3**
		16524	WORD	-	Gascooler digital output fan activation (I/O number)	-12...12	0	num	**3**

LABEL	LABEL	PAR. VALUE ADDRESS	DATA SIZE	CPL	DESCRIPTION	RANGE	DEFAULT	M.U.	LEVEL
12.239 - d38	**HR1 Belimo**	**16928**	WORD	-	Heat recovery 1 digital output bypass valve (module)	0...13	0	num	**3**
		16929	WORD	-	Heat recovery 1 digital output bypass valve (I/O number)	-12...12	0	num	**3**
12.240 - d39	**HR1 water pump**	**16930**	WORD	-	Heat recovery 1 digital output H2O pump (module)	0...13	0	num	**3**
		16931	WORD	-	Heat recovery 1 digital output H2O pump digital output (I/O number)	-12...12	0	num	**3**
12.241 - d40	**HR2 Belimo**	**16932**	WORD	-	Heat recovery 2 digital output bypass valve (module)	0...13	0	num	**3**
		16933	WORD	-	Heat recovery 2 digital output bypass valve (I/O number)	-12...12	0	num	**3**
12.242 - d41	**HR2 water pump**	**16934**	WORD	-	Heat recovery 2 digital output H2O pump (module)	0...13	0	num	**3**
		16935	WORD	-	Heat recovery 2 digital output H2O pump digital output (I/O number)	-12...12	0	num	**3**
12.243 - d42	**FG valve enable**	**18005**	WORD	-	Flash gas valve digital output activation (module)	0...13	0	num	**3**
		18006	WORD	-	Flash gas valve digital output activation (I/O number)	-12...12	-10	num	**3**
12.262 - d51	**FG valve synchr.**	**16900**	WORD	-	Flash gas valve digital output synchronization (module)	0...13	0	num	**3**
		16901	WORD	-	Flash gas valve digital output synchronization (I/O number)	-12...12	-10	num	**3**
12.244 - d43	**ST compr. 1 enable**	**18084**	WORD	-	PC line compressor 1 digital output activation (module)	0...13	0	num	**3**
		18085	WORD	-	PC line compressor 1 digital output activation (I/O number)	-12...12	0	num	**3**
12.245 - d44	**ST compr. 2 enable**	**18086**	WORD	-	PC line compressor 2 digital output activation (module)	0...13	0	num	**3**
		18087	WORD	-	PC line compressor 2 digital output activation (I/O number)	-12...12	0	num	**3**
12.246 - d45	**ST compr. 3 enable**	**18088**	WORD	-	PC line compressor 3 digital output activation (module)	0...13	0	num	**3**
		18089	WORD	-	PC line compressor 3 digital output activation (I/O number)	-12...12	0	num	**3**

LABEL	LABEL	PAR. VALUE ADDRESS	DATA SIZE	CPL	DESCRIPTION	RANGE	DEFAULT	M.U.	LEVEL
12.247 - d46	**ST compr. 4 enable**	**18090**	WORD	-	PC line compressor 4 digital output activation (module)	0...13	0	num	**3**
		18091	WORD	-	PC line compressor 4 digital output activation (I/O number)	-12...12	0	num	**3**
12.248 - d47	**Liquid injection**	**17949**	WORD	-	Liquid injection digital output (module)	0...13	0	num	**3**
		17950	WORD	-	Liquid injection digital output (I/O number)	-12...12	0	num	**3**
12.249 - d48	**LT heat exchanger**	**16902**	WORD	-	Heat exchanger digital output (module)	0...13	0	num	**3**
		16903	WORD	-	Heat exchanger digital output (I/O number)	-12...12	0	num	**3**
12.250 - d49	**Oil valve**	**16872**	WORD	-	Oil valve digital output (module)	0...13	1	num	**3**
		16873	WORD	-	Oil valve digital output (I/O number)	-12...12	1	num	**3**
3-12 IO Allocation									
3-12-5 AO Allocation									
AO digital output allocation parameter values (module) 0=not configured, 1=EWCM, 2=EXP1...13=EXP12 (I/O number) 0=not configured, 1=AO1, 2=AO2,...6=AO6									
12.251 - 01n	**LT inverter 1**	**16946**	WORD	-	LT line analog output inverter (module)	0...13	1	num	**3**
		16947	WORD	-	LT line analog output inverter (I/O number)	0...6	2	num	**3**
12.252 - 02n	**HT inverter 1**	**16942**	WORD	-	HT line analog output inverter (module)	0...13	1	num	**3**
		16943	WORD	-	HT line analog output inverter (I/O number)	0...6	1	num	**3**
12.253 - 03n	**HP valve**	**16940**	WORD	-	HP valve analogue output (module)	0...13	1	num	**3**
		16941	WORD	-	HP valve analog output (I/O number)	0...6	3	num	**3**
12.254 - 04n	**Gascooler fan**	**16956**	WORD	-	Gascooler analog output (module)	0...13	1	num	**3**
		16957	WORD	-	Gascooler analogue output (I/O number)	0...6	5	num	**3**

LABEL	LABEL	PAR. VALUE ADDRESS	DATA SIZE	CPL	DESCRIPTION	RANGE	DEFAULT	M.U.	LEVEL
12.255 - 05n	**HR 1 valve**	**16950**	WORD	-	Heat recovery 1 analog output valve (module)	0...13	0	num	**3**
		16951	WORD	-	Heat recovery 1 analog output valve (I/O number)	0...6	0	num	**3**
12.256 - 06n	**HR 2 valve**	**16952**	WORD	-	Heat recovery 2 analog output valve (module)	0...13	0	num	**3**
		16953	WORD	-	Heat recovery 2 analog output valve (I/O number)	0...6	0	num	**3**
12.257 - 07n	**Ext. evaporator fan**	**17943**	WORD	-	External evaporator analog output (module)	0...13	0	num	**3**
		17944	WORD	-	External evaporator analog output (I/O number)	0...6	0	num	**3**
12.258 - 08n	**Receiver MP valve**	**16954**	WORD	-	Receiver valve analog output (module)	0...13	1	num	**3**
		16955	WORD	-	Receiver valve analog output (I/O number)	0...6	4	num	**3**
12.259 - 09n	**ST inverter 1**	**18096**	WORD	-	PC line analog output inverter (module)	0...13	0	num	**3**
		18097	WORD	-	PC line analog output inverter (I/O number)	0...6	0	num	**3**
12.260 - 10n	**Heat exch. fan**	**16960**	WORD	-	Heat exchanger analog output fan (module)	0...13	0	num	**3**
		16961	WORD	-	Heat exchanger analog output fan (I/O number)	0...6	0	num	**3**

8.1.14. Resources Table

LABEL	READ ONLY	ADDR	DESCRIPTION	RANGE	CPL	M.U.
AI33	Y	8993	Engine room temperature probe	-3276,8 ... 3276,7	Y	°C/°F
AL60	Y	12326	Engine room temperature probe failure	0 ... 65535	N	num
DO27	Y	9222	Engine room digital output	0 ... 1	N	flag
AI32	Y	8992	Electrical cabinet temperature probe	-3276,8 ... 3276,7	Y	°C/°F
AL61	Y	12327	Electrical cabinet temperature probe failure	0 ... 65535	N	num
DO26	Y	9221	Electrical cabinet digital output	0 ... 1	N	flag
AI36	Y	8999	General purpose regulator 1 probe	-32768,0 ... 32767,0	Y	num/°C/°F/%/ohm
AL240	Y	12522	General purpose regulator probe alarm 1	0 ... 65535	N	num
DI133	Y	9183	General purpose regulator 1 digital input	0 ... 1	N	flag
DO36	Y	9232	General purpose regulator 1 digital output	0 ... 1	N	flag
AL229	Y	12512	General purpose regulator alarm 1	0 ... 65535	N	num
AL233	Y	12516	General purpose regulator warning 1	0 ... 65535	N	num
AI37	Y	9000	General purpose regulator 2 probe	-32768,0 ... 32767,0	Y	num/°C/°F/%/ohm
AL241	Y	12523	General purpose regulator probe alarm 2	0 ... 65535	N	num
DI134	Y	9184	General purpose regulator 2 digital input	0 ... 1	N	flag
DO37	Y	9233	General purpose regulator 2 digital output	0 ... 1	N	flag
AL230	Y	12513	General purpose regulator alarm 2	0 ... 65535	N	num
AL234	Y	12517	General purpose regulator warning 2	0 ... 65535	N	num
AI38	Y	9001	General purpose regulator 3 probe	-32768,0 ... 32767,0	Y	num/°C/°F/%/ohm
AL242	Y	12524	General purpose regulator probe alarm 3	0 ... 65535	N	num
DI135	Y	9185	General purpose regulator 3 digital input	0 ... 1	N	flag
DO38	Y	9234	General purpose regulator 3 digital output	0 ... 1	N	flag
AL231	Y	12514	General purpose regulator alarm 3	0 ... 65535	N	num
AL235	Y	12518	General purpose regulator warning 3	0 ... 65535	N	num
AI39	Y	9002	General purpose regulator 4 probe	-32768,0 ... 32767,0	Y	num/°C/°F/%/ohm
AL243	Y	12525	General purpose regulator probe alarm 4	0 ... 65535	N	num
DI136	Y	9186	General purpose regulator 4 digital input	0 ... 1	N	flag
DO39	Y	9235	General purpose regulator 4 digital output	0 ... 1	N	flag
AL232	Y	12515	General purpose regulator alarm 4	0 ... 65535	N	num
AL236	Y	12519	General purpose regulator warning 4	0 ... 65535	N	num
DI140	Y	10443	Aux 1 digital input	0 ... 1	N	flag
DO44	Y	10000	AUX output 1	0 ... 1	N	flag
DI141	Y	10444	Aux 2 digital input	0 ... 1	N	flag
DO45	Y	10004	AUX output 2	0 ... 1	N	flag
DI142	Y	10445	Aux 3 digital input	0 ... 1	N	flag
DO46	Y	10008	AUX output 3	0 ... 1	N	flag
DI143	Y	10446	Aux 4 digital input	0 ... 1	N	flag
DO47	Y	10012	AUX output 4	0 ... 1	N	flag
AL145	Y	12433	General purpose alarm 1	0 ... 65535	N	num
AL146	Y	12434	General purpose alarm 2	0 ... 65535	N	num
AL147	Y	12435	General purpose alarm 3	0 ... 65535	N	num

LABEL	READ ONLY	ADDR	DESCRIPTION	RANGE	CPL	M.U.
AL148	Y	12436	General purpose alarm 4	0 ... 65535	N	num
AL223	Y	12506	Configuration error alarm	0 ... 65535	N	num
AL224	Y	12507	Data logger error	0 ... 65535	N	num
AL225	Y	12508	Maintenance required for compressor operating hours exceeded	0 ... 65535	N	num
DI1	Y	9021	High pressure 107 digital input	0 ... 1	N	flag
AL63	Y	12330	High pressure 107 bar alarm	0 ... 65535	N	num
DI2	Y	9022	High pressure 105 digital input	0 ... 1	N	flag
AL64	Y	12329	High pressure 105 bar alarm	0 ... 65535	N	num
DI3	Y	9023	General alarm digital input	0 ... 1	N	flag
AL65	Y	12331	General alarm	0 ... 65535	N	num
PowLim	Y	10450	Power limitation status	0 ... 1	N	flag
DI4	Y	9024	Power limitation digital input	0 ... 1	N	flag
DI138	Y	10428	Economy digital input	0 ... 1	N	flag
Eco	Y	10131	Economy function	0 ... 1	N	flag
DI5	Y	9025	Anti noise digital input	0 ... 1	N	flag
St13	Y	10427	Antinoise status	0 ... 1	N	flag
DI130	Y	9180	Stand-by input	0 ... 1	N	flag
St6	Y	10339	Stand-by mode	0 ... 1	N	flag
St5	Y	10338	Transcritical mode status	0 ... 1	N	flag
Alm	Y	10055	Alarm	0 ... 1	N	flag
AL5	Y	9429	Wiring fault alarm	0 ... 1	N	flag
AL210	Y	10408	Wiring fault alarm expansion 1	0 ... 65535	N	num
AL211	Y	10409	Wiring fault alarm expansion 2	0 ... 65535	N	num
AL212	Y	10410	Wiring fault alarm expansion 3	0 ... 65535	N	num
AL213	Y	10411	Wiring fault alarm expansion 4	0 ... 65535	N	num
AL214	Y	10412	Wiring fault alarm expansion 5	0 ... 65535	N	num
AL215	Y	10413	Wiring fault alarm expansion 6	0 ... 65535	N	num
AL216	Y	10414	Wiring fault alarm expansion 7	0 ... 65535	N	num
AL217	Y	10415	Wiring fault alarm expansion 8	0 ... 65535	N	num
AL218	Y	10416	Wiring fault alarm expansion 9	0 ... 65535	N	num
AL219	Y	10417	Wiring fault alarm expansion 10	0 ... 65535	N	num
AL220	Y	10418	Wiring fault alarm expansion 11	0 ... 65535	N	num
AL221	Y	10419	Wiring fault alarm expansion 12	0 ... 65535	N	num
DO1	Y	9187	Severe emergency digital output	0 ... 1	N	flag
DO2	Y	9188	Emergency digital output	0 ... 1	N	flag
AI42	Y	10058	LT line suction pressure probe	-3276,8 ... 3276,7	Y	bar/°C/psi/°F
AL36	Y	12298	LT line suction pressure probe failure	0 ... 65535	N	num
W24	Y	10332	LT line suction pressure backup probe	-3276,8 ... 3276,7	Y	bar/°C/psi/°F
AL37	Y	12299	LT line suction pressure backup probe failure	0 ... 65535	N	num
AI11	Y	8969	LT line suction temperature probe	-3276,8 ... 3276,7	Y	°C/°F
AL38	Y	12300	LT line suction temperature probe failure	0 ... 65535	N	num
AI15	Y	8974	LT line discharge temperature probe	-3276,8 ... 3276,7	Y	°C/°F
AL39	Y	12301	LT line discharge temperature probe failure	0 ... 65535	N	num

LABEL	READ ONLY	ADDR	DESCRIPTION	RANGE	CPL	M.U.
AV11	Y	10354	LT line superheating	-3276,8 ... 3276,7	Y	°C/°F
W11	Y	10071	LT line regulation set	-3276,8 ... 3276,7	Y	bar/°C/psi/°F
LTrem1	Y	10359	LT line remote offset Refer to **"8.3. Floating Suction" page 246**	-3276,8 ... 3276,7	Y	bar/psi
LTrem2	N	10362	LT line remote offset timeout Refer to **"8.3. Floating Suction" page 246**	0 ... 65535	N	num
NumLT	Y	10215	LT line number of active steps	0 ... 255	N	num
St10	Y	10356	LT line power generated	0 ... 6553,5	N	%
St19	Y	9261	LT line activation status	0 ... 1	N	flag
AL110	Y	12387	LT line low suction pressure alarm	0 ... 65535	N	num
AL111	Y	12388	LT line high suction pressure alarm	0 ... 65535	N	num
AL112	Y	12389	LT line high discharge pressure alarm	0 ... 65535	N	num
AL113	Y	12390	LT line high discharge temperature alarm	0 ... 65535	N	num
AL151	Y	12439	LT line low superheating alarm	0 ... 65535	N	num
AL152	Y	12440	LT line high superheating alarm	0 ... 65535	N	num
DI16	Y	9037	LT line digital input low pressure	0 ... 1	N	flag
AL84	Y	12350	LT line low pressure switch alarm	0 ... 65535	N	num
DI18	Y	9042	LT line compressor 1 digital input thermal switch	0 ... 1	N	flag
AL86	Y	12355	LT line compressor 1 thermal alarm	0 ... 65535	N	num
DI19	Y	9043	LT line compressor 1 digital input high pressure	0 ... 1	N	flag
AL87	Y	12356	LT line compressor 1 high pressure alarm	0 ... 65535	N	num
DI20	Y	9045	LT line compressor 1 digital input general alarm	0 ... 1	N	flag
AL88	Y	12358	LT line compressor 1 general alarm	0 ... 65535	N	num
DI114	Y	9164	LT line compressor 1 digital input oil high level	0 ... 1	N	flag
AL165	Y	12453	LT line compressor 1 oil high level alarm	0 ... 65535	N	num
DI115	Y	9165	LT line compressor 1 digital input oil low level	0 ... 1	N	flag
AL157	Y	12445	LT line compressor 1 oil low level alarm	0 ... 65535	N	num
DI17	Y	9038	LT line digital input inverter motor protection	0 ... 1	N	flag
AL85	Y	12352	LT line inverter motor protection alarm	0 ... 65535	N	num
DO14	Y	9207	LT line compressor 1 digital output activation	0 ... 1	N	flag
AO3	Y	9007	LT line inverter analog output	-3276,8 ... 3276,7	Y	%
FreqLT1	Y	10197	LT line inverter frequency	0 ... 255	N	Hz
HourLT1	Y	17213	LT line compressor 1 working hours	0 ... 65535	N	h
TimeLT1	Y	10207	LT line compressor 1 timer	0 ... 65535	N	s
DI21	Y	9046	LT line compressor 2 digital input thermal switch	0 ... 1	N	flag
AL89	Y	12359	LT line compressor 2 thermal alarm	0 ... 65535	N	num
DI22	Y	9047	LT line compressor 2 digital input high pressure	0 ... 1	N	flag
AL90	Y	12360	LT line compressor 2 high pressure alarm	0 ... 65535	N	num
DI23	Y	9049	LT line compressor 2 digital input general alarm	0 ... 1	N	flag
AL91	Y	12362	LT line compressor 2 general alarm	0 ... 65535	N	num
DI116	Y	9166	LT line compressor 2 digital input oil high level	0 ... 1	N	flag
AL166	Y	12454	LT line compressor 2 oil high level alarm	0 ... 65535	N	num

LABEL	READ ONLY	ADDR	DESCRIPTION	RANGE	CPL	M.U.
DI117	Y	9167	LT line compressor 2 digital input oil low level	0 ... 1	N	flag
AL158	Y	12446	LT line compressor 2 oil low level alarm	0 ... 65535	N	num
DO15	Y	9208	LT line compressor 2 digital output activation	0 ... 1	N	flag
HourLT2	Y	17215	LT line compressor 2 working hours	0 ... 65535	N	h
TimeLT2	Y	10208	LT line compressor 2 timer	0 ... 65535	N	s
DI24	Y	9050	LT line compressor 3 digital input thermal switch	0 ... 1	N	flag
AL92	Y	12363	LT line compressor 3 thermal alarm	0 ... 65535	N	num
DI25	Y	9051	LT line compressor 3 digital input high pressure	0 ... 1	N	flag
AL93	Y	12364	LT line compressor 3 high pressure alarm	0 ... 65535	N	num
DI26	Y	9053	LT line compressor 3 digital input general alarm	0 ... 1	N	flag
AL94	Y	12366	LT line compressor 3 general alarm	0 ... 65535	N	num
DI118	Y	9168	LT line compressor 3 digital input oil high level	0 ... 1	N	flag
AL167	Y	12455	LT line compressor 3 oil high level alarm	0 ... 65535	N	num
DI119	Y	9169	LT line compressor 3 digital input oil low level	0 ... 1	N	flag
AL159	Y	12447	LT line compressor 3 oil low level alarm	0 ... 65535	N	num
DO16	Y	9209	LT line compressor 3 digital output activation	0 ... 1	N	flag
HourLT3	Y	17217	LT line compressor 3 working hours	0 ... 65535	N	h
TimeLT3	Y	10209	LT line compressor 3 timer	0 ... 65535	N	s
DI27	Y	9054	LT line compressor 4 digital input thermal switch	0 ... 1	N	flag
AL95	Y	12367	LT line compressor 4 thermal alarm	0 ... 65535	N	num
DI28	Y	9055	LT line compressor 4 digital input high pressure	0 ... 1	N	flag
AL96	Y	12368	LT line compressor 4 high pressure alarm	0 ... 65535	N	num
DI29	Y	9057	LT line compressor 4 digital input general alarm	0 ... 1	N	flag
AL97	Y	12370	LT line compressor 4 general alarm	0 ... 65535	N	num
DI120	Y	9170	LT line compressor 4 digital input oil high level	0 ... 1	N	flag
AL168	Y	12456	LT line compressor 4 oil high level alarm	0 ... 65535	N	num
DI121	Y	9171	LT line compressor 4 digital input oil low level	0 ... 1	N	flag
AL160	Y	12448	LT line compressor 4 oil low level alarm	0 ... 65535	N	num
DO17	Y	9210	LT line compressor 4 digital output activation	0 ... 1	N	flag
HourLT4	Y	17219	LT line compressor 4 working hours	0 ... 65535	N	h
TimeLT4	Y	10210	LT line compressor 4 timer	0 ... 65535	N	s
DI30	Y	9058	LT line compressor 5 digital input thermal switch	0 ... 1	N	flag
AL98	Y	12371	LT line compressor 5 thermal alarm	0 ... 65535	N	num
DI31	Y	9059	LT line compressor 5 digital input high pressure	0 ... 1	N	flag
AL99	Y	12372	LT line compressor 5 high pressure alarm	0 ... 65535	N	num
DI32	Y	9061	LT line compressor 5 digital input general alarm	0 ... 1	N	flag
AL100	Y	12374	LT line compressor 5 general alarm	0 ... 65535	N	num
DI122	Y	9172	LT line compressor 5 digital input oil high level	0 ... 1	N	flag
AL169	Y	12457	LT line compressor 5 oil high level alarm	0 ... 65535	N	num
DI123	Y	9173	LT line compressor 5 digital input oil low level	0 ... 1	N	flag
AL161	Y	12449	LT line compressor 5 oil low level alarm	0 ... 65535	N	num
DO18	Y	9211	LT line compressor 5 digital output activation	0 ... 1	N	flag
HourLT5	Y	17221	LT line compressor 5 working hours	0 ... 65535	N	h
TimeLT5	Y	10211	LT line compressor 5 timer	0 ... 65535	N	s

LABEL	READ ONLY	ADDR	DESCRIPTION	RANGE	CPL	M.U.
DI33	Y	9062	LT line compressor 6 digital input thermal switch	0 ... 1	N	flag
AL101	Y	12375	LT line compressor 6 thermal alarm	0 ... 65535	N	num
DI34	Y	9063	LT line compressor 6 digital input high pressure	0 ... 1	N	flag
AL102	Y	12376	LT line compressor 6 high pressure alarm	0 ... 65535	N	num
DI35	Y	9065	LT line compressor 6 digital input general alarm	0 ... 1	N	flag
AL103	Y	12378	LT line compressor 6 general alarm	0 ... 65535	N	num
DI124	Y	9174	LT line compressor 6 digital input oil high level	0 ... 1	N	flag
AL170	Y	12458	LT line compressor 6 oil high level alarm	0 ... 65535	N	num
DI125	Y	9175	LT line compressor 6 digital input oil low level	0 ... 1	N	flag
AL162	Y	12450	LT line compressor 6 oil low level alarm	0 ... 65535	N	num
DO19	Y	9212	LT line compressor 6 digital output activation	0 ... 1	N	flag
HourLT6	Y	17223	LT line compressor 6 working hours	0 ... 65535	N	h
TimeLT6	Y	10212	LT line compressor 6 timer	0 ... 65535	N	s
DI36	Y	9066	LT line compressor 7 digital input thermal switch	0 ... 1	N	flag
AL104	Y	12379	LT line compressor 7 thermal alarm	0 ... 65535	N	num
DI37	Y	9067	LT line compressor 7 digital input high pressure	0 ... 1	N	flag
AL105	Y	12380	LT line compressor 7 high pressure alarm	0 ... 65535	N	num
DI38	Y	9069	LT line compressor 7 digital input general alarm	0 ... 1	N	flag
AL106	Y	12382	LT line compressor 7 general alarm	0 ... 65535	N	num
DI126	Y	9176	LT line compressor 7 digital input oil high level	0 ... 1	N	flag
AL171	Y	12459	LT line compressor 7 oil high level alarm	0 ... 65535	N	num
DI127	Y	9177	LT line compressor 7 digital input oil low level	0 ... 1	N	flag
AL163	Y	12451	LT line compressor 7 oil low level alarm	0 ... 65535	N	num
DO20	Y	9213	LT line compressor 7 digital output activation	0 ... 1	N	flag
HourLT7	Y	17225	LT line compressor 7 working hours	0 ... 65535	N	h
TimeLT7	Y	10213	LT line compressor 7 timer	0 ... 65535	N	s
DI39	Y	9070	LT line compressor 8 digital input thermal switch	0 ... 1	N	flag
AL107	Y	12383	LT line compressor 8 thermal alarm	0 ... 65535	N	num
DI40	Y	9071	LT line compressor 8 digital input high pressure	0 ... 1	N	flag
AL108	Y	12384	LT line compressor 8 high pressure alarm	0 ... 65535	N	num
DI41	Y	9073	LT line compressor 8 digital input general alarm	0 ... 1	N	flag
AL109	Y	12386	LT line compressor 8 general alarm	0 ... 65535	N	num
DI128	Y	9178	LT line compressor 8 digital input oil high level	0 ... 1	N	flag
AL172	Y	12460	LT line compressor 8 oil high level alarm	0 ... 65535	N	num
DI129	Y	9179	LT line compressor 8 digital input oil low level	0 ... 1	N	flag
AL164	Y	12452	LT line compressor 8 oil low level alarm	0 ... 65535	N	num
DO21	Y	9214	LT line compressor 8 digital output activation	0 ... 1	N	flag
HourLT8	Y	17227	LT line compressor 8 working hours	0 ... 65535	N	h
TimeLT8	Y	10214	LT line compressor 8 timer	0 ... 65535	N	s
AI43	Y	10059	HT line suction pressure probe	-3276,8 ... 3276,7	Y	bar/°C/psi/°F
AL29	Y	12290	HT line suction pressure probe failure	0 ... 65535	N	num
W25	Y	10333	HT line suction pressure backup probe	-3276,8 ... 3276,7	Y	bar/°C/psi/°F
AL30	Y	12291	HT line suction pressure backup probe failure	0 ... 65535	N	num
AI10	Y	8968	HT line suction temperature probe	-3276,8 ... 3276,7	Y	°C/°F

LABEL	READ ONLY	ADDR	DESCRIPTION	RANGE	CPL	M.U.
AL31	Y	12292	HT line suction temperature probe failure	0 ... 65535	N	num
AI14	Y	8973	HT line discharge temperature probe	-3276,8 ... 3276,7	Y	°C/°F
AL32	Y	12293	HT line discharge temperature probe failure	0 ... 65535	N	num
AI31	Y	8991	HT line discharge pressure probe	-3276,8 ... 3276,7	Y	bar/psi
AL57	Y	12320	HT line discharge pressure probe failure	0 ... 65535	N	num
AV10	Y	10353	HT line superheating	-3276,8 ... 3276,7	Y	°C/°F
W1	Y	10060	HT line regulation set	-3276,8 ... 3276,7	Y	bar/°C/psi/°F
HTrem1	Y	10361	HT line remote offset Refer to **"8.3. Floating Suction" page 246**	-3276,8 ... 3276,7	Y	bar/psi
HTrem2	N	10362	HT line remote offset timeout Refer to **"8.3. Floating Suction" page 246**	0 ... 65535	N	num
DO28	Y	9223	HT line digital output hot gas dump	0 ... 1	N	flag
NumHT	Y	10216	HT line number of active steps	0 ... 255	N	num
S78	Y	10348	HT line power generated	0 ... 6553,5	N	%
St7	Y	10347	HT line activation status	0 ... 1	N	flag
AL239	Y	10453	HT line discharge limiter active	0 ... 255	N	num
AL140	Y	12428	HT line low suction pressure alarm	0 ... 65535	N	num
AL141	Y	12429	HT line high suction pressure alarm	0 ... 65535	N	num
AL142	Y	12430	HT line high discharge pressure alarm	0 ... 65535	N	num
AL143	Y	12431	HT line high discharge temperature alarm	0 ... 65535	N	num
AL153	Y	12441	HT line low superheating alarm	0 ... 65535	N	num
AL154	Y	12442	HT line high superheating alarm	0 ... 65535	N	num
DI42	Y	9074	HT line digital input compr.running	0 ... 1	N	flag
DI43	Y	9075	HT line digital input low pressure	0 ... 1	N	flag
AL114	Y	12391	HT line low pressure switch alarm	0 ... 65535	N	num
DI45	Y	9080	HT line compressor 1 digital input thermal switch	0 ... 1	N	flag
AL116	Y	12396	HT line compressor 1 thermal alarm	0 ... 65535	N	num
DI46	Y	9081	HT line compressor 1 digital input high pressure	0 ... 1	N	flag
AL117	Y	12397	HT line compressor 1 high pressure alarm	0 ... 65535	N	num
DI47	Y	9083	HT line compressor 1 digital input general alarm	0 ... 1	N	flag
AL118	Y	12399	HT line compressor 1 general alarm	0 ... 65535	N	num
DI97	Y	9148	HT line compressor 1 digital input oil high level	0 ... 1	N	flag
AL181	Y	12469	HT line compressor 1 oil high level alarm	0 ... 65535	N	num
DI98	Y	9149	HT line compressor 1 digital input oil low level	0 ... 1	N	flag
AL173	Y	12461	HT line compressor 1 oil low level alarm	0 ... 65535	N	num
DI44	Y	9076	HT line digital input inverter motor protection	0 ... 1	N	flag
AL115	Y	12393	HT line inverter motor protection alarm	0 ... 65535	N	num
DO5	Y	9194	HT line compressor 1 digital output activation	0 ... 1	N	flag
AO2	Y	9005	HT line inverter analog output	-3276,8 ... 3276,7	Y	%
FreqHT1	Y	10187	HT line inverter frequency	0 ... 255	N	Hz
HourHT1	Y	17197	HT line compressor 1 working hours	0 ... 65535	N	h
TimeHT1	Y	10199	HT line compressor 1 timer	0 ... 65535	N	s

LABEL	READ ONLY	ADDR	DESCRIPTION	RANGE	CPL	M.U.
DI48	Y	9084	HT line compressor 2 digital input thermal switch	0 ... 1	N	flag
AL119	Y	12400	HT line compressor 2 thermal alarm	0 ... 65535	N	num
DI49	Y	9085	HT line compressor 2 digital input high pressure	0 ... 1	N	flag
AL120	Y	12401	HT line compressor 2 high pressure alarm	0 ... 65535	N	num
DI50	Y	9087	HT line compressor 2 digital input general alarm	0 ... 1	N	flag
AL121	Y	12403	HT line compressor 2 general alarm	0 ... 65535	N	num
DI99	Y	9150	HT line compressor 2 digital input oil high level	0 ... 1	N	flag
AL182	Y	12470	HT line compressor 2 oil high level alarm	0 ... 65535	N	num
DI101	Y	9151	HT line compressor 2 digital input oil low level	0 ... 1	N	flag
AL174	Y	12462	HT line compressor 2 oil low level alarm	0 ... 65535	N	num
DO6	Y	9195	HT line compressor 2 digital output activation	0 ... 1	N	flag
HourHT2	Y	17199	HT line compressor 2 working hours	0 ...	N	h
TimeHT2	Y	10200	HT line compressor 2 timer	0 ... 65535	N	s
DI51	Y	9088	HT line compressor 3 digital input thermal switch	0 ... 1	N	flag
AL122	Y	12404	HT line compressor 3 thermal alarm	0 ... 65535	N	num
DI52	Y	9089	HT line compressor 3 digital input high pressure	0 ... 1	N	flag
AL123	Y	12405	HT line compressor 3 high pressure alarm	0 ... 65535	N	num
DI53	Y	9091	HT line compressor 3 digital input general alarm	0 ... 1	N	flag
AL124	Y	12407	HT line compressor 3 general alarm	0 ... 65535	N	num
DI102	Y	9152	HT line compressor 3 digital input oil high level	0 ... 1	N	flag
AL183	Y	12471	HT line compressor 3 oil high level alarm	0 ... 65535	N	num
DI103	Y	9153	HT line compressor 3 digital input oil low level	0 ... 1	N	flag
AL175	Y	12463	HT line compressor 3 oil low level alarm	0 ... 65535	N	num
DO7	Y	9196	HT line compressor 3 digital output activation	0 ... 1	N	flag
HourHT3	Y	17201	HT line compressor 3 working hours	0 ...	N	h
TimeHT3	Y	10201	HT line compressor 3 timer	0 ... 65535	N	s
DI54	Y	9092	HT line compressor 4 digital input thermal switch	0 ... 1	N	flag
AL125	Y	12408	HT line compressor 4 thermal alarm	0 ... 65535	N	num
DI55	Y	9093	HT line compressor 4 digital input high pressure	0 ... 1	N	flag
AL126	Y	12409	HT line compressor 4 high pressure alarm	0 ... 65535	N	num
DI56	Y	9095	HT line compressor 4 digital input general alarm	0 ... 1	N	flag
AL127	Y	12411	HT line compressor 4 general alarm	0 ... 65535	N	num
DI104	Y	9154	HT line compressor 4 digital input oil high level	0 ... 1	N	flag
AL184	Y	12472	HT line compressor 4 oil high level alarm	0 ... 65535	N	num
DI105	Y	9155	HT line compressor 4 digital input oil low level	0 ... 1	N	flag
AL176	Y	12464	HT line compressor 4 oil low level alarm	0 ... 65535	N	num
DO8	Y	9197	HT line compressor 4 digital output activation	0 ... 1	N	flag
HourHT4	Y	17203	HT line compressor 4 working hours	0 ... 65535	N	h
TimeHT4	Y	10202	HT line compressor 4 timer	0 ... 65535	N	s
DI57	Y	9096	HT line compressor 5 digital input thermal switch	0 ... 1	N	flag
AL128	Y	12412	HT line compressor 5 thermal alarm	0 ... 65535	N	num
DI58	Y	9097	HT line compressor 5 digital input high pressure	0 ... 1	N	flag
AL129	Y	12413	HT line compressor 5 high pressure alarm	0 ... 65535	N	num
DI59	Y	9099	HT line compressor 5 digital input general alarm	0 ... 1	N	flag

LABEL	READ ONLY	ADDR	DESCRIPTION	RANGE	CPL	M.U.
AL130	Y	12415	HT line compressor 5 general alarm	0 ... 65535	N	num
DI106	Y	9156	HT line compressor 5 digital input oil high level	0 ... 1	N	flag
AL185	Y	12473	HT line compressor 5 oil high level alarm	0 ... 65535	N	num
DI107	Y	9157	HT line compressor 5 digital input oil low level	0 ... 1	N	flag
AL177	Y	12465	HT line compressor 5 oil low level alarm	0 ... 65535	N	num
DO9	Y	9198	HT line compressor 5 digital output activation	0 ... 1	N	flag
HourHT5	Y	17205	HT line compressor 5 working hours	0 ... 65535	N	h
TimeHT5	Y	10203	HT line compressor 5 timer	0 ... 65535	N	s
DI60	Y	9100	HT line compressor 6 digital input thermal switch	0 ... 1	N	flag
AL131	Y	12416	HT line compressor 6 thermal alarm	0 ... 65535	N	num
DI61	Y	9101	HT line compressor 6 digital input high pressure	0 ... 1	N	flag
AL132	Y	12417	HT line compressor 6 high pressure alarm	0 ... 65535	N	num
DI62	Y	9103	HT line compressor 6 digital input general alarm	0 ... 1	N	flag
AL133	Y	12419	HT line compressor 6 general alarm	0 ... 65535	N	num
DI108	Y	9158	HT line compressor 6 digital input oil high level	0 ... 1	N	flag
AL186	Y	12474	HT line compressor 6 oil high level alarm	0 ... 65535	N	num
DI109	Y	9159	HT line compressor 6 digital input oil low level	0 ... 1	N	flag
AL178	Y	12466	HT line compressor 6 oil low level alarm	0 ... 65535	N	num
DO10	Y	9199	HT line compressor 6 digital output activation	0 ... 1	N	flag
HourHT6	Y	17207	HT line compressor 6 working hours	0 ... 65535	N	h
TimeHT6	Y	10204	HT line compressor 6 timer	0 ... 65535	N	s
DI63	Y	9104	HT line compressor 7 digital input thermal switch	0 ... 1	N	flag
AL134	Y	12420	HT line compressor 7 thermal alarm	0 ... 65535	N	num
DI64	Y	9105	HT line compressor 7 digital input high pressure	0 ... 1	N	flag
AL135	Y	12421	HT line compressor 7 high pressure alarm	0 ... 65535	N	num
DI65	Y	9107	HT line compressor 7 digital input general alarm	0 ... 1	N	flag
AL136	Y	12423	HT line compressor 7 general alarm	0 ... 65535	N	num
DI110	Y	9160	HT line compressor 7 digital input oil high level	0 ... 1	N	flag
AL187	Y	12475	HT line compressor 7 oil high level alarm	0 ... 65535	N	num
DI111	Y	9161	HT line compressor 7 digital input oil low level	0 ... 1	N	flag
AL179	Y	12467	HT line compressor 7 oil low level alarm	0 ... 65535	N	num
DO11	Y	9200	HT line compressor 7 digital output activation	0 ... 1	N	flag
HourHT7	Y	17209	HT line compressor 7 working hours	0 ...	N	h
TimeHT7	Y	10205	HT line compressor 7 timer	0 ... 65535	N	s
DI66	Y	9108	HT line compressor 8 digital input thermal switch	0 ... 1	N	flag
AL137	Y	12424	HT line compressor 8 thermal alarm	0 ... 65535	N	num
DI67	Y	9109	HT line compressor 8 digital input high pressure	0 ... 1	N	flag
AL138	Y	12425	HT line compressor 8 high pressure alarm	0 ... 65535	N	num
DI68	Y	9111	HT line compressor 8 digital input general alarm	0 ... 1	N	flag
AL139	Y	12427	HT line compressor 8 general alarm	0 ... 65535	N	num
DI112	Y	9162	HT line compressor 8 digital input oil high level	0 ... 1	N	flag
AL188	Y	12476	HT line compressor 8 oil high level alarm	0 ... 65535	N	num
DI113	Y	9163	HT line compressor 8 digital input oil low level	0 ... 1	N	flag
AL180	Y	12468	HT line compressor 8 oil low level alarm	0 ... 65535	N	num

LABEL	READ ONLY	ADDR	DESCRIPTION	RANGE	CPL	M.U.
DO12	Y	9201	HT line compressor 8 digital output activation	0 ... 1	N	flag
HourHT8	Y	17211	HT line compressor 8 working hours	0 ...	N	h
TimeHT8	Y	10206	HT line compressor 8 timer	0 ... 65535	N	s
AV5	Y	10340	HP valve pressure probe	-3276,8 ... 3276,7	Y	bar/psi
AL33	Y	12294	HP valve pressure probe failure	0 ... 65535	N	num
AI4	Y	8962	HP valve pressure backup probe	-3276,8 ... 3276,7	Y	bar/psi
AL34	Y	12295	HP valve pressure backup probe failure	0 ... 65535	N	num
AV3	Y	10249	HP valve setpoint	-3276,8 ... 3276,7	Y	bar/psi
DI132	Y	9182	HP valve digital input alarm	0 ... 1	N	flag
AL149	Y	12437	HP valve alarm	0 ... 65535	N	num
DO30	Y	9226	HP valve digital output activation	0 ... 1	N	flag
W21	Y	10253	HP valve analog output	-32768 ... 32767	Y	%
St22	Y	9259	HP valve state	-32768 ... 32767	Y	num
DO48	Y	10261	HP valve digital output synchronization	0 ... 1	N	flag
AL247	Y	12353	HP valve EEV wiring fault	0 ... 65535	N	num
AL249	Y	12357	HP valve EEV alarm	0 ... 65535	N	num
AI12	Y	8970	External air temperature probe	-3276,8 ... 3276,7	Y	°C/°F
AL40	Y	12302	External air temperature probe failure	0 ... 65535	N	num
AI1	Y	8959	Gascooler out 1 temperature probe	-3276,8 ... 3276,7	Y	°C/°F
AL27	Y	12288	Gascooler out 1 temperature probe failure	0 ... 65535	N	num
AI2	Y	8960	Gascooler out 2 temperature probe	-3276,8 ... 3276,7	Y	°C/°F
AL28	Y	12289	Gascooler out 2 temperature probe failure	0 ... 65535	N	num
SetGC	Y	9056	Gascooler setpoint	-3276,8 ... 3276,7	Y	°C/°F
AL77	Y	12343	Gascooler high out temperature alarm	0 ... 65535	N	num
AL78	Y	12344	Gascooler low out temperature alarm	0 ... 65535	N	num
DI70	Y	9114	Gascooler fan 1 digital input alarm	0 ... 1	N	flag
AL71	Y	12337	Gascooler fan 1 alarm	0 ... 65535	N	num
DO32	Y	9228	Gascooler fan 1 digital output activation	0 ... 1	N	flag
DI71	Y	9115	Gascooler fan 2 digital input alarm	0 ... 1	N	flag
AL72	Y	12338	Gascooler fan 2 alarm	0 ... 65535	N	num
DO33	Y	9229	Gascooler fan 2 digital output activation	0 ... 1	N	flag
DI72	Y	9116	Gascooler fan 3 digital input alarm	0 ... 1	N	flag
AL73	Y	12339	Gascooler fan 3 alarm	0 ... 65535	N	num
DO34	Y	9230	Gascooler fan 3 digital output activation	0 ... 1	N	flag
DI73	Y	9117	Gascooler fan 4 digital input alarm	0 ... 1	N	flag
AL74	Y	12340	Gascooler fan 4 alarm	0 ... 65535	N	num
DO35	Y	9231	Gascooler fan 4 digital output activation	0 ... 1	N	flag
DO50	Y	9251	Gascooler digital output fan activation	0 ... 1	N	flag
DI74	Y	9118	Gascooler digital input alarm	0 ... 1	N	flag
AL75	Y	12341	Gascooler digital alarm	0 ... 65535	N	num
AL150	Y	12438	Gascooler high pressure alarm	0 ... 65535	N	num
DI75	Y	9119	Gascooler digital input inverter alarm	0 ... 1	N	flag
AL79	Y	12345	Gascooler inverter alarm	0 ... 65535	N	num
W23	Y	10255	Gascooler analog output	-32768 ... 32767	Y	%

LABEL	READ ONLY	ADDR	DESCRIPTION	RANGE	CPL	M.U.
AI19	Y	8978	Heat recovery 1 temperature probe CO2 inlet	-3276,8 ... 3276,7	Y	°C/°F
AL42	Y	12304	Heat recovery 1 CO2 inlet temperature probe failure	0 ... 65535	N	num
AI20	Y	8979	Heat recovery 1 temperature probe CO2 outlet	-3276,8 ... 3276,7	Y	°C/°F
AL43	Y	12305	Heat recovery 1 CO2 outlet temperature probe failure	0 ... 65535	N	num
AI21	Y	8980	Heat recovery 1 temperature probe H2O inlet	-3276,8 ... 3276,7	Y	°C/°F
AL44	Y	12306	Heat recovery 1 H2O inlet temperature probe failure	0 ... 65535	N	num
AI22	Y	8981	Heat recovery 1 temperature probe H2O outlet	-3276,8 ... 3276,7	Y	°C/°F
AL45	Y	12307	Heat recovery 1 H2O outlet temperature probe failure	0 ... 65535	N	num
AI18	Y	8977	Heat recovery 1 temperature probe boiler top	-3276,8 ... 3276,7	Y	°C/°F
AL46	Y	12308	Heat recovery 1 boiler top temperature probe failure	0 ... 65535	N	num
AI17	Y	8976	Heat recovery 1 temperature probe boiler middle	-3276,8 ... 3276,7	Y	°C/°F
AL47	Y	12309	Heat recovery 1 boiler middle temperature probe failure	0 ... 65535	N	num
AI16	Y	8975	Heat recovery 1 temperature probe boiler bottom	-3276,8 ... 3276,7	Y	°C/°F
AL48	Y	12310	Heat recovery 1 boiler bottom temperature probe failure	0 ... 65535	N	num
AV1	Y	9044	Heat recovery 1 in/out temperature delta	-3276,8 ... 3276,7	Y	°C/°F
St1	Y	9003	Heat recovery 1 max power request status	0 ... 1	N	flag
DI12	Y	9033	Heat recovery 1 activation digital input	0 ... 1	N	flag
HR1	Y	10176	Heat recovery 1 state	0 ... 1	N	flag
DI13	Y	9034	Heat recovery 1 alarm digital input	0 ... 1	N	flag
AL81	Y	12347	Heat recovery 1 digital alarm	0 ... 65535	N	num
AL237	Y	12520	Heat recovery 1 H2O in/out temperature difference too low alarm	0 ... 65535	N	num
DO22	Y	9217	Heat recovery 1 digital output bypass valve	0 ... 1	N	flag
DO23	Y	9218	Heat recovery 1 digital output H2O pump	0 ... 1	N	flag
AO4	Y	9009	Heat recovery 1 analog output valve	-3276,8 ... 3276,7	Y	%
AI26	Y	8985	Heat recovery 2 temperature probe CO2 inlet	-3276,8 ... 3276,7	Y	°C/°F
AL49	Y	12311	Heat recovery 2 CO2 inlet temperature probe failure	0 ... 65535	N	num
AI27	Y	8986	Heat recovery 2 temperature probe CO2 outlet	-3276,8 ... 3276,7	Y	°C/°F
AL50	Y	12312	Heat recovery 2 CO2 outlet temperature probe failure	0 ... 65535	N	num
AI28	Y	8987	Heat recovery 2 temperature probe H2O inlet	-3276,8 ... 3276,7	Y	°C/°F
AL51	Y	12313	Heat recovery 2 H2O inlet temperature probe failure	0 ... 65535	N	num
AI29	Y	8988	Heat recovery 2 temperature probe H2O outlet	-3276,8 ... 3276,7	Y	°C/°F
AL52	Y	12314	Heat recovery 2 H2O outlet temperature probe failure	0 ... 65535	N	num
AI25	Y	8984	Heat recovery 2 temperature probe boiler top	-3276,8 ... 3276,7	Y	°C/°F
AL53	Y	12315	Heat recovery 2 boiler top temperature probe failure	0 ... 65535	N	num
AI24	Y	8983	Heat recovery 2 temperature probe boiler middle	-3276,8 ... 3276,7	Y	°C/°F
AL54	Y	12316	Heat recovery 2 boiler middle temperature probe failure	0 ... 65535	N	num
AI23	Y	8982	Heat recovery 2 temperature probe boiler bottom	-3276,8 ... 3276,7	Y	°C/°F
AL55	Y	12317	Heat recovery 2 boiler bottom temperature probe failure	0 ... 65535	N	num
AV2	Y	9048	Heat recovery 2 in/out temperature delta	-3276,8 ... 3276,7	Y	°C/°F
DI14	Y	9035	Heat recovery 2 activation digital input	0 ... 1	N	flag
HR2	Y	10177	Heat recovery 2 state	0 ... 1	N	flag
DI15	Y	9036	Heat recovery 2 alarm digital input	0 ... 1	N	flag
AL82	Y	12348	Heat recovery 2 digital alarm	0 ... 65535	N	num

LABEL	READ ONLY	ADDR	DESCRIPTION	RANGE	CPL	M.U.
AL238	Y	12521	Heat recovery 2 H2O in/out temperature difference too low alarm	0 ... 65535	N	num
DO24	Y	9219	Heat recovery 2 digital output bypass valve	0 ... 1	N	flag
DO25	Y	9220	Heat recovery 2 digital output H2O pump	0 ... 1	N	flag
AO5	Y	9010	Heat recovery 2 analog output valve	-3276,8 ... 3276,7	Y	%
AI5	Y	8963	Receiver pressure probe	-3276,8 ... 3276,7	Y	bar/psi
AL35	Y	12297	Receiver pressure probe failure	0 ... 65535	N	num
AI47	Y	10355	Liquid level analog input	-3276,8 ... 3276,7	Y	%
AL26	Y	12287	Liquid level analog input failure	0 ... 65535	N	num
AL62	Y	12328	CO2 low level alarm	0 ... 65535	N	num
AV14	Y	10433	Flash gas valve setpoint	-3276,8 ... 3276,7	Y	bar/psi
DI69	Y	9112	Receiver digital input valve alarm	0 ... 1	N	flag
AL144	Y	12432	Liquid receiver valve alarm	0 ... 65535	N	num
AL155	Y	12443	Liquid receiver low pressure alarm	0 ... 65535	N	num
AL156	Y	12444	Liquid receiver high pressure alarm	0 ... 65535	N	num
DI6	Y	9026	CO2 level 1 digital input	0 ... 1	N	flag
AL66	Y	12332	CO2 level 1 alarm	0 ... 65535	N	num
DI7	Y	9027	CO2 level 2 digital input	0 ... 1	N	flag
AL67	Y	12333	CO2 level 2 alarm	0 ... 65535	N	num
DI8	Y	9028	CO2 level 3 digital input	0 ... 1	N	flag
AL68	Y	12334	CO2 level 3 alarm	0 ... 65535	N	num
DI9	Y	9029	CO2 level 4 digital input	0 ... 1	N	flag
AL69	Y	12335	CO2 level 4 alarm	0 ... 65535	N	num
DI10	Y	9030	CO2 level 5 digital input	0 ... 1	N	flag
AL70	Y	12336	CO2 level 5 alarm	0 ... 65535	N	num
DO29	Y	9225	Liquid injection digital output	0 ... 1	N	flag
DO31	Y	9227	Flash gas digital output valve activation	0 ... 1	N	flag
W22	Y	10254	Flash gas valve analog output	-32768 ... 32767	Y	%
St23	Y	9260	State_XVD_FG	-32768 ... 32767	Y	num
DO49	Y	10262	FG valve digital output synchronization	0 ... 1	N	flag
AL248	Y	12354	FG valve EEV wiring fault	0 ... 65535	N	num
AL250	Y	12361	FG valve EEV alarm	0 ... 65535	N	num
AI48	Y	10438	PC line suction temp.probe	-3276,8 ... 3276,7	Y	°C/°F
AL226	Y	12509	PC line suction temperature probe failure	0 ... 65535	N	num
AV15	Y	10439	PC line superheating	-3276,8 ... 3276,7	Y	°C/°F
NumPC	Y	10452	PC line number of active steps	0 ... 255	N	num
St15	Y	10432	PC line power generated	0 ... 6553,5	N	%
St14	Y	10430	PC line activation status	0 ... 1	N	flag
AL228	Y	12511	PC line low superheating alarm	0 ... 65535	N	num
AL227	Y	12510	PC line high superheating alarm	0 ... 65535	N	num
DI139	Y	10437	PC line digital input compr.running	0 ... 1	N	flag
DI76	Y	9120	PC line compressor 1 digital input thermal switch	0 ... 1	N	flag
AL190	Y	12481	PC line compressor 1 thermal alarm	0 ... 65535	N	num
DI80	Y	9124	PC line compressor 1 digital input high pressure	0 ... 1	N	flag

LABEL	READ ONLY	ADDR	DESCRIPTION	RANGE	CPL	M.U.
AL191	Y	12482	PC line compressor 1 high pressure alarm	0 ... 65535	N	num
DI84	Y	9132	PC line compressor 1 digital input general alarm	0 ... 1	N	flag
AL192	Y	12484	PC line compressor 1 general alarm	0 ... 65535	N	num
DI88	Y	9136	PC line compressor 1 digital input oil high	0 ... 1	N	flag
AL194	Y	12486	PC line compressor 1 high oil alarm	0 ... 65535	N	num
DI92	Y	9140	PC line compressor 1 digital input oil low	0 ... 1	N	flag
AL193	Y	12485	PC line compressor 1 low oil alarm	0 ... 65535	N	num
DI96	Y	9146	PC line digital input inverter motor protection	0 ... 1	N	flag
AL189	Y	12478	PC line inverter motor protection alarm	0 ... 65535	N	num
DO40	Y	9236	PC line compressor 1 digital output activation	0 ... 1	N	flag
AO9	Y	9015	PC line inverter analog output	-3276,8 ... 3276,7	Y	%
FreqPC1	Y	10391	PC line inverter frequency	0 ... 255	N	Hz
HourPC1	Y	18105	PC line compressor 1 working hours	0 ...	N	h
TimePC1	Y	10393	PC line compressor 1 timer	0 ... 65535	N	s
DI77	Y	9121	PC line compressor 2 digital input thermal switch	0 ... 1	N	flag
AL195	Y	12487	PC line compressor 2 thermal alarm	0 ... 65535	N	num
DI81	Y	9125	PC line compressor 2 digital input high pressure	0 ... 1	N	flag
AL196	Y	12488	PC line compressor 2 high pressure alarm	0 ... 65535	N	num
DI85	Y	9133	PC line compressor 2 digital input general alarm	0 ... 1	N	flag
AL197	Y	12490	PC line compressor 2 general alarm	0 ... 65535	N	num
DI89	Y	9137	PC line compressor 2 digital input oil high	0 ... 1	N	flag
AL199	Y	12492	PC line compressor 2 high oil alarm	0 ... 65535	N	num
DI93	Y	9141	PC line compressor 2 digital input oil low	0 ... 1	N	flag
AL198	Y	12491	PC line compressor 2 low oil alarm	0 ... 65535	N	num
DO41	Y	9237	PC line compressor 2 digital output activation	0 ... 1	N	flag
HourPC2	Y	18107	PC line compressor 2working hours	0 ...	N	h
TimePC2	Y	10397	PC line compressor 2 timer	0 ... 65535	N	s
DI78	Y	9122	PC line compressor 3 digital input thermal switch	0 ... 1	N	flag
AL200	Y	12493	PC line compressor 3 thermal alarm	0 ... 65535	N	num
DI82	Y	9126	PC line compressor 3 digital input high pressure	0 ... 1	N	flag
AL201	Y	12494	PC line compressor 3 high pressure alarm	0 ... 65535	N	num
DI86	Y	9134	PC line compressor 3 digital input general alarm	0 ... 1	N	flag
AL202	Y	12496	PC line compressor 3 general alarm	0 ... 65535	N	num
DI90	Y	9138	PC line compressor 3 digital input oil high	0 ... 1	N	flag
AL204	Y	12498	PC line compressor 3 high oil alarm	0 ... 65535	N	num
DI94	Y	9142	PC line compressor 3 digital input oil low	0 ... 1	N	flag
AL203	Y	12497	PC line compressor 3 low oil alarm	0 ... 65535	N	num
DO42	Y	9238	PC line compressor 3 digital output activation	0 ... 1	N	flag
HourPC3	Y	18109	PC line compressor 3 working hours	0 ...	N	h
TimePC3	Y	10400	PC line compressor 3 timer	0 ... 65535	N	s
DI79	Y	9123	PC line compressor 4 digital input thermal switch	0 ... 1	N	flag
AL205	Y	12499	PC line compressor 4 thermal alarm	0 ... 65535	N	num
DI83	Y	9127	PC line compressor 4 digital input high pressure	0 ... 1	N	flag
AL206	Y	12500	PC line compressor 4 high pressure alarm	0 ... 65535	N	num

LABEL	READ ONLY	ADDR	DESCRIPTION		RANGE	CPL	M.U.
DI87	Y	9135	PC line compressor 4 digital input general alarm		0 ... 1	N	flag
AL207	Y	12502	PC line compressor 4 general alarm		0 ... 65535	N	num
DI91	Y	9139	PC line compressor 4 digital input oil high		0 ... 1	N	flag
AL209	Y	12504	PC line compressor 4 high oil alarm		0 ... 65535	N	num
DI95	Y	9143	PC line compressor 4 digital input oil low		0 ... 1	N	flag
AL208	Y	12503	PC line compressor 4 low oil alarm		0 ... 65535	N	num
DO43	Y	9239	PC line compressor 4 digital output activation		0 ... 1	N	flag
HourPC4	Y	18111	PC line compressor 4 working hours		0 ...	N	h
TimePC4	Y	10403	PC line compressor 4 timer		0 ... 65535	N	s
AI13	Y	8971	Heat exchanger out temperature probe		-3276,8 ... 3276,7	Y	°C/°F
AL41	Y	12303	Heat exchanger out temperature probe failure		0 ... 65535	N	num
DI131	Y	9181	Heat exchanger digital input alarm		0 ... 1	N	flag
AL83	Y	12349	Heat exchanger alarm		0 ... 65535	N	num
DO13	Y	9204	Heat exchanger digital output		0 ... 1	N	flag
AO8	Y	9014	Heat exchanger fan analog output		-3276,8 ... 3276,7	Y	%
AI30	Y	8989	Oil temperature probe		-3276,8 ... 3276,7	Y	°C/°F
AL56	Y	12319	Oil temperature probe failure		0 ... 65535	N	num
DI137	Y	10424	Oil separator digital input		0 ... 1	N	flag
DI11	Y	9032	Oil level digital input		0 ... 1	N	flag
AL80	Y	12346	Oil level alarm		0 ... 65535	N	num
AL222	Y	12505	Oil high temp. alarm		0 ... 65535	N	num
DO4	Y	9190	Oil valve digital output		0 ... 1	N	flag
AI49	Y	8972	Oil pressure probe		-14,5 ... 2320	Y	bar/psi
AL244	Y	12526	Oil pressure probe failure		0 ... 65535	N	num
AL245	Y	12527	Oil high pressure		0 ... 65535	N	num
AL246	Y	12528	Oil low pressure		0 ... 65535	N	num
AV16	Y	10250	Delta pressure between oil and liquid receiver		-3276,8 ... 3276,7	Y	bar/psi
AL251	Y	12351	Connect file error		0 ... 65535	N	num
St25	Y	9252	Multi connection available		0 ... 1	N	flag
Cmd1	N	10435	Enable power limitation	Write 1	0 ... 1	N	flag
Cmd2	N	10435	Disable power limitation	Write 0	0 ... 1	N	flag
Cmd3	N	10436	Enable antinoise	Write 1	0 ... 1	N	flag
Cmd4	N	10436	Disable antinoise	Write 0	0 ... 1	N	flag
MuteAlm	N	10178	Alarm silencing	Write 1	0 ... 1	N	flag
ResAlm	N	9954	Reset alarms	Write 1	0 ... 1	N	flag
ResAlmHist	N	10093	Reset alarm history	Write 1	0 ... 1	N	flag

LABEL	READ ONLY	ADDR	DESCRIPTION		RANGE	CPL	M.U.
Res_HT1	N	9068	HT line reset compressor 1 hours	in OFF Mode only. Write 1	0 ... 1	N	flag
Res_HT2	N	9072	HT line reset compressor 2 hours		0 ... 1	N	flag
Res_HT3	N	9077	HT line reset compressor 3 hours		0 ... 1	N	flag
Res_HT4	N	9078	HT line reset compressor 4 hours		0 ... 1	N	flag
Res_HT5	N	9079	HT line reset compressor 5 hours		0 ... 1	N	flag
Res_HT6	N	9082	HT line reset compressor 6 hours		0 ... 1	N	flag
Res_HT7	N	9086	HT line reset compressor 7 hours		0 ... 1	N	flag
Res_HT8	N	9090	HT line reset compressor 8 hours		0 ... 1	N	flag
Res_LT1	N	9094	LT line reset compressor 1 hours	in OFF Mode only. Write 1	0 ... 1	N	flag
Res_LT2	N	9098	LT line reset compressor 2 hours		0 ... 1	N	flag
Res_LT3	N	9102	LT line reset compressor 3 hours		0 ... 1	N	flag
Res_LT4	N	9106	LT line reset compressor 4 hours		0 ... 1	N	flag
Res_LT5	N	9110	LT line reset compressor 5 hours		0 ... 1	N	flag
Res_LT6	N	9128	LT line reset compressor 6 hours		0 ... 1	N	flag
Res_LT7	N	9129	LT line reset compressor 7 hours		0 ... 1	N	flag
Res_LT8	N	9130	LT line reset compressor 8 hours		0 ... 1	N	flag
Res_PC1	N	9131	PC line reset compressor 1 hours	in OFF Mode only. Write 1	0 ... 1	N	flag
Res_PC2	N	9144	PC line reset compressor 2 hours		0 ... 1	N	flag
Res_PC3	N	9145	PC line reset compressor 3 hours		0 ... 1	N	flag
Res_PC4	N	9147	PC line reset compressor 4 hours		0 ... 1	N	flag
RRTCup	N	8750	Update clock	Write 1 *(1)*	0 ... 1	N	flag

(1) Set the clock by writing the values shown in the RTC Clock table in the suitable registers. At the end update the clock by writing 1 in register 8750

8.2. RTC

LABEL	READ ONLY	ADDR	DESCRIPTION	RANGE
Reserved	-	-	-	-
Reserved	-	-	-	-
Second	N	8743	Seconds	0...59
Minute	N	8744	Minutes	0...59
Hour	N	8745	Hours	0...23
DayOfWeek	N	8746	Day of the week 0 = Sunday, 1 = Monday,..., 6 = Saturday	0...6
Day	N	8747	Day	1...31
Month	N	8748	Month	1...12
Year	N	8749	Year (10 = 2010, 99 = 2099)	10...99

8.3. Floating Suction

For activation from supervision, it is possible to write the required offset value remotely.
Floating suction algorithms allows moreover to add / subtract an offset to the suction setpoint.
It is possible to use the supervision offset to control the suction regulation SetPoint depending on the ambient temperature (for instance the temperature of the display area of the supermarket.)

8.3.1. HT Mode

To activate the functionality write the timer enabling the function at address 10362 [HTRem2].
Once written the timer starts to be decremented by 1 every 100 ms. If the value becomes zero the functionality is deactivated.

To keep the functionality active, it is therefore necessary to periodically rewrite the value of the timer by using a value sufficiently large that the timer does not start to zero before the next writing.

The timer prevents that in the event of failure to communicate with the master / supervisor, the function must be deactivated independently.
This timer is also used to prevent the offset from remaining permanently applied in the event of accidental disconnection of the device. If the offset application needs to be extended, the timer must be periodically refreshed.
It is possible to use the supervision offset to control the suction regulation SetPoint depending on the ambient temperature (for instance the temperature of the display area of the supermarket.)

Write the set point offset to address 10631 [HTRem1].

8.3.2. LT Mode

To activate the functionality write the timer enabling the function at address 10360 [LTRem2].
Write the set point offset to address 10359 [LTRem1].

NOTE: The offset is always set in pressure mode (bar if the unit of pressure is C / bar or psi if the unit of pressure selected is F / psi).

8.3.3. Control condition

This value will be added to the nominal offset if it is within the limits set by parameters 02.021 - LHo and 02.020 - LLo.
If the value is outside this range, no set point offset is applied to prevent accidental writing of incorrect values.
NOTE. The offset adds up and does not replace other offsets due to other functions (economy from digital input or from event).

LABEL	LABEL	PAR. VALUE ADDRESS	DATA SIZE	CPL	DESCRIZIONE	RANGE	DEFAULT	U.M.	LEVEL
02.020 - LLo	**Offset min value**	**16709**	WORD	-1	LT line economy offset min value from supervisor	-1.0...160.0	5.0	bar/psi	**2**
		16714	WORD	-1		-200.0...800.0	12.3	°C/°F	**2**
02.021 - LHo	**Offset max value**	**16715**	WORD	-1	LT line economy offset max value from supervisor	-1.0...160.0	5.0	bar/psi	**2**
		16722	WORD	-1		-200.0...800.0	9.4	°C/°F	**2**
03.020 - HLo	**Offset min value**	**16723**	WORD	-1	BT line economy offset min value from supervisor	-1.0...160.0	5.0	bar/psi	**2**
		16730	WORD	-1		-200.0...800.0	7.3	°C/°F	**2**
03.021 - HHo	**Offset max value**	**16731**	WORD	-1	BT line economy offset max value from supervisor	-1.0...160.0	5.0	bar/psi	**2**
		16738	WORD	-1		-200.0...800.0	6.3	°C/°F	**2**

8.3.4. Floating Suction resources table

LABEL	READ ONLY	ADDR	DESCRIPTION	RANGE	CPL	M.U.
LTrem1	N	10359	BT line remote offset	-3276.8... 3276.7	N	°C/°F / bar/psi
LTrem2	N	10360	BT line remote offset timeout	0...65635	N	num
HTrem1	N	10361	HT line remote offset	-3276.8... 3276.7	N	°C/°F / bar/psi
HTrem2	N	10362	HT line remote offset timeout	0...65635	N	num

CHAPTER 9
Alarms

The **EWCM 9000 PRO** is able to perform complete diagnostics of the system signalling any operating problems with specific alarms, to signal specific events on LCD display and via LED, defined by the user to have greater control over the system.

Alarms are always indicated with the red Alarm LED on the keyboard. The alarm is also indicated by activation of the corresponding alarm relay if configured.

The alarms can be of 3 types:
Automatic Alarm
Alarm active if the cause of the alarm is present, otherwise not.
Manual Alarm
Alarm active if the cause of the alarm is present, otherwise resettable from the Alarms menu.
Events alarm
Behaves like an automatic alarm so long as the number of events in the unit of time is less than a number set in a parameter, otherwise like a manual alarm.

9.3.1. Alarm Type

The alarm condition and relative type are defined by parameter.
Each alarm can be associated to a mode and a priority.
The mode may be:
- AAH (0): automatic
- MAH (1): manual
- BAH (2): by event. Value 2 is significant only for digital alarms.

The priority may be configured as:
- **0= disabled** Disables alarm management;
- **1= warning** Enables alarm warning only;
- **2= alarm** Enables warning and any actions on regulators;
- **3= alarm + relay** Enables warning, any action on regulators and activates a dedicated relay for any blocking alarm action;

The dedicated relay is configured via parameter **12.203 - d02**.

The configuration parameters are described in the chapter Alarms. See “8.1.12. | 3-11 Alarms” page 178.
For example the first alarm **11.001 - A01** is divided by mode and priority:

11.001 - A01	**High pressure 107**	**17049**	WORD	-	Alarm mode high press. 107 • AAH (0): automatic • MAH (1): manual • BAH (2): by event	0...2	0	num
		17050	WORD	-	Alarm priority high press. 107 **0= disabled** **1= warning** **2= alarm** **3= alarm+relay**	0...3	0	num

The mode and priority are available for all digital and analogue alarms and for a sub-group of probe alarms (see column “9.1.6. Alarms table” page 251).
The event alarms can be configured via two other parameters which define the window time and the number of alarms in the window.

9.3.1.1. Events alarm operating conditions

The number of errors is counted using a ‘FIFO’ method. The time interval PEi is divided into 32 parts; the counter is incremented by one unit if there are one or more activations during one part of the entire interval PEi.
Two operating examples are given below: In both cases, suppose that PEi = 32' (equal to 32'/32 = 1 minute) and PEn = 7.

Example 1: ALARM SIGNALLED
The interval for storing activations is 1 minute: all activations within that minute are counted as a single activation and the alarm (if any) is activated when the sampling interval has elapsed. In this example the pressure switch alarm is signalled because there have been 7 activations during the 32' time window.
Example 2: ALARM NOT SIGNALLED
In this example the alarm is not activated because during the 32' time window the number of activations set in parameter PEn was not reached. In practice the time window is a rolling window and all activations that are outside of it are deleted: the reference point is the last activation and the time PEi is subtracted from that point to establish how many activations are included in the count.

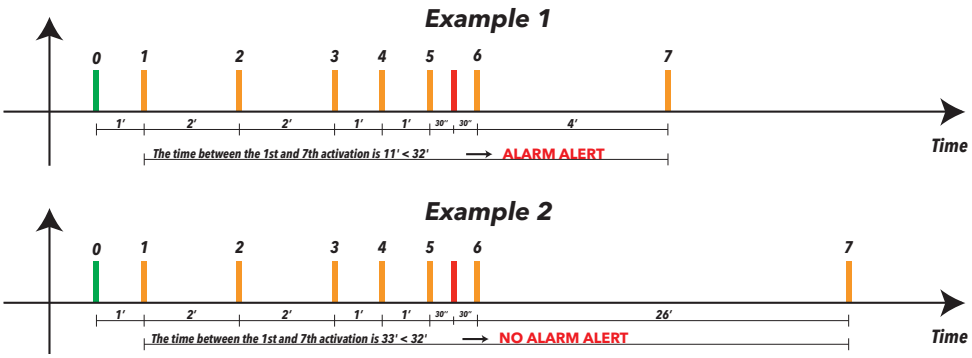

The configuration parameter managing the events alarms are of the type described in the Alarms chapter. See “8.1.12. | 3-11 Alarms” page 178 and given as an example below (Window and Max number of alarms in the window time)

11.003 - A03	**High press. 105/107**	**17168**	WORD	-	Window time high pressure 105/107 bar/psi	5...255	5	min
		17169	WORD	-	Max number of alarms in the window time high pressure 105/107 bar/psi	0...32	0	num

9.3.2. Alarms Bypass

For some alarms the bypass time is in seconds, and can be configured by a parameter, as in the example:

11.054 - A52	**Low press. alm byp**	**17249**	WORD	-	LT line low pressure switch alarm bypass	0...999	0	s

9.3.3. Alarm mute

The alarm is acknowledged in the Alarms Menu. The alarm LED flashes. The relay configured as an alarm relay will be deactivated.
With new alarms/probe errors, the LED changes from flashing to steady on and the alarm relay is reactivated.
If during the acknowledgement period all alarms automatically reset, the LED turns off and the alarm relay is deactivated.
If at the end of the acknowledgement period there is at least one active alarm, the alarm relay is re-activated and the alarm LED turns on again.

9.3.4. Alarm Enabling

In general all alarms and probe errors are immediately controlled from when the machine is switched on, if enabled.
The LT and HT control probe maximum and minimum alarms are distinguished inasmuch as they are controlled, if enabled, after the device is switched on.
Management of probe errors always enabled is an exception.

9.3.5. Alarm log

The history contains a maximum of 90 alarms. A new alarm, after this limit is reached, will result in the loss of the oldest alarm data.
When a new alarm is activated it is entered in the history immediately.
If the alarm is already present in the history and occurred in the same hour, its hourly frequency is increased. The maximum value of hourly frequency is 99.
The log can be enabled or disabled from the user terminal. The information available on the display includes:

- Description
- On date and time/min
- Off date and time/min

The log can be reset from the remote terminal by selecting the relative item in the menu.

9.3.6. Alarms table

ID	description	alarm type	Priority	input (1)	bypass	effect
1	HP valve pressure probe failure	probe	-	16P	-	backup probe
2	HP valve backup pressure probe failure	probe	-	17P	-	AI % or plant shutdown
3	Receiver pressure probe failure	probe	-	37P	-	AI % or plant shutdown
4	HT line suction pressure probe failure	probe	-	11P	-	backup probe
5	HT line backup suction pressure probe failure	probe	-	12P	-	force out or plant shutdown
6	LT line suction pressure probe failure	probe	-	07P	-	backup probe
7	LT line backup suction pressure probe failure	probe	-	08P	-	AI % or compr. block LT
8	HT line discharge pressure probe failure	probe	X	14P	-	warning or plant shutdown
9	HT line suction temperature probe failure	probe	-	13P	-	warning - display only
10	LT line suction temperature probe failure	probe	-	09P	-	warning - display only
11	HT line discharge temperature probe failure	probe	-	15P	-	warning - display only
12	LT line discharge temperature probe failure	probe	-	10P	-	warning - display only
13	Gascooler temperature probe output 1 failure	probe	-	19P	-	change probe | external air probe
14	Gascooler temperature probe output 2 failure	probe	-	20P	-	change probe | external air probe
15	Heat exchanger output temperature probe failure	probe	-	39P	-	warning + AI %
17	Oil temperature probe failure	probe	X	40P	-	plant shutdown
18	External air temperature probe failure	probe	-	18P	-	warning + AI %
20	Heat recovery 1 bottom boiler temperature probe failure	probe	-	27P	-	backup probe or HR1 block
21	Heat recovery 1 middle boiler temperature probe failure	probe	-	26P	-	backup probe or HR1 block
22	Heat recovery 1 top boiler temperature probe failure	probe	-	25P	-	backup probe or HR1 block
23	Heat recovery 1 CO2 inlet temperature probe failure	probe	-	21P	-	HR1 block
24	Heat recovery 1 CO2 outlet temperature probe failure	probe	-	22P	-	HR1 block
25	Heat recovery 1 H2O inlet temperature probe failure	probe	-	23P	-	HR1 block
26	Heat recovery 1 H2O outlet temperature probe failure	probe	-	24P	-	HR1 block
27	Heat recovery 2 bottom boiler temperature probe failure	probe	-	34P	-	backup probe or HR2 block
28	Heat recovery 2 middle boiler temperature probe failure	probe	-	33P	-	backup probe or HR2 block
29	Heat recovery 2 top boiler temperature probe failure	probe	-	32P	-	backup probe or HR2 block
30	Heat recovery 2 CO2 inlet temperature probe failure	probe	-	28P	-	HR2 block
31	Heat recovery 2 CO2 outlet temperature probe failure	probe	-	29P	-	HR2 block
32	Heat recovery 2 H2O inlet temperature probe failure	probe	-	30P	-	HR2 block
33	Heat recovery 2 H2O outlet temperature probe failure	probe	-	31P	-	HR2 block
34	External evaporator temperature probe failure	probe	-	35P	-	warning - display only
35	External evaporator pressure probe failure	probe	-	36P	-	warning - display only

ID	description	alarm type	Priority	input (1)	bypass	effect
36	**Engine room temperature probe failure**	probe	-	01P	-	warning - display only
37	**Electrical panel temperature probe failure**	probe	-	02P	-	warning - display only
41	**Oil Pressure Probe error**	probe	X	42P	-	resource blocked
50	**CO2 level 1 alarm**	digital	X	i134	-	plant shutdown
51	**CO2 level 2 alarm**	digital	X	i135	-	plant shutdown
52	**CO2 level 3 alarm**	digital	X	i136	-	plant shutdown
53	**CO2 level 4 alarm**	digital	X	i137	-	plant shutdown
54	**CO2 level 5 alarm**	digital	X	i138	-	plant shutdown
55	**High pressure alarm 107 bar**	digital	X	i001	-	plant shutdown
56	**High pressure alarm 105 bar**	digital	X	i002	-	plant shutdown
57	**General alarm**	digital	X	i003	-	plant shutdown
59	**Oil level alarm**	digital	X	i141	X	plant shutdown
60	**Gascooler high pressure alarm**	input	X	16P - 17P	-	plant shutdown
61	**Gascooler output temperature high alarm**	input	X	19P - 20P	-	plant shutdown
62	**Gascooler output temperature low alarm**	input	X	19P - 20P	-	plant shutdown
63	**Fan 1 alarm**	digital	X	i103	-	resource blocked
64	**Fan 2 alarm**	digital	X	i104	-	resource blocked
65	**Fan 3 alarm**	digital	X	i105	-	resource blocked
66	**Fan 4 alarm**	digital	X	i106	-	resource blocked
67	**Gascooler alarm from digital input**	digital	X	i101	-	plant shutdown
68	**Gascooler inverter alarm**	digital	X	i102	-	plant shutdown
70	**Alarm heat recovery 1 from digital input**	digital	X	i109	-	HR1 block
71	**Alarm heat recovery 2 from digital input**	digital	X	i111	-	HR2 block
72	**Heat exchanger alarm**	digital	X	i139	-	resource blocked
73	**Receiver MP valve failure**	digital	X	i112	-	plant shutdown
75	**Receiver low pressure alarm**	input	X	37P	--	plant shutdown
76	**Receiver high pressure alarm**	input	X	37P	-	plant shutdown
77	**HP valve alarm**	digital	X	i100	-	plant shutdown
81	**No communication expansion 1 alarm**	digital	X	serial (2)	-	according to the I/O configuration
82	**No communication expansion 2 alarm**	digital	X	serial (2)	-	according to the I/O configuration
83	**No communication expansion 3 alarm**	digital	X	serial (2)	-	according to the I/O configuration
84	**No communication expansion 4 alarm**	digital	X	serial (2)	-	according to the I/O configuration
85	**No communication expansion 5 alarm**	digital	X	serial (2)	-	according to the I/O configuration
86	**No communication expansion 6 alarm**	digital	X	serial (2)	-	according to the I/O configuration
87	**No communication expansion 7 alarm**	digital	X	serial (2)	-	according to the I/O configuration
88	**No communication expansion 8 alarm**	digital	X	serial (2)	-	according to the I/O configuration
89	**No communication expansion 9 alarm**	digital	X	serial (2)	-	according to the I/O configuration

ID	description	alarm type	Priority	input (1)	bypass	effect
90	**No communication expansion 10 alarm**	digital	X	serial (2)	-	according to the I/O configuration
91	**No communication expansion 11 alarm**	digital	X	serial (2)	-	according to the I/O configuration
92	**No communication expansion 12 alarm**	digital	X	serial (2)	-	according to the I/O configuration
93	**LT line motor protection inverter alarm**	digital	X	i016	-	resource blocked
100	**LT line low pressure switch alarm**	digital	X	i015	X	LT line compressors blocked
101	**LT line high suction pressure alarm**	input	X	07P/08P (1)	X	LT line compressors blocked
102	**LT line low suction pressure alarm**	input	X	07P/08P (1)	X	LT line compressors blocked
103	**LT line high discharge pressure alarm**	input	X	11P - 12P	X	LT line compressors blocked
104	**LT line high discharge temperature alarm**	input	X	10P	X	LT line compressors blocked
105	**LT line low superheat alarm**	input	X	09P/08P (1)	X	LT line compressors blocked
106	**LT line high superheat alarm**	input	X	09P/08P (1)	X	LT line compressors blocked
107	**LT line compressor 1 thermal switch alarm**	digital	X	i017	-	resource blocked
108	**LT line compressor 2 thermal switch alarm**	digital	X	i022	-	resource blocked
109	**LT line compressor 3 thermal switch alarm**	digital	X	i027	-	resource blocked
110	**LT line compressor 4 thermal switch alarm**	digital	X	i032	-	resource blocked
111	**LT line compressor 5 thermal switch alarm**	digital	X	i037	-	resource blocked
112	**LT line compressor 6 thermal switch alarm**	digital	X	i042	-	resource blocked
113	**LT line compressor 7 thermal switch alarm**	digital	X	i047	-	resource blocked
114	**LT line compressor 8 thermal switch alarm**	digital	X	i052	-	resource blocked
115	**LT line compressor 1 high pressure alarm**	digital	X	i018	X	resource blocked
116	**LT line compressor 2 high pressure alarm**	digital	X	i023	X	resource blocked
117	**LT line compressor 3 high pressure alarm**	digital	X	i028	X	resource blocked
118	**LT line compressor 4 high pressure alarm**	digital	X	i033	X	resource blocked
119	**LT line compressor 5 high pressure alarm**	digital	X	i038	X	resource blocked
120	**LT line compressor 6 high pressure alarm**	digital	X	i043	X	resource blocked
121	**LT line compressor 7 high pressure alarm**	digital	X	i048	X	resource blocked
122	**LT line compressor 8 high pressure alarm**	digital	X	i053	X	resource blocked
131	**LT line compressor 1 general alarm**	digital	X	i021	-	resource blocked
132	**LT line compressor 2 general alarm**	digital	X	i026	-	resource blocked
133	**LT line compressor 3 general alarm**	digital	X	i031	-	resource blocked
134	**LT line compressor 4 general alarm**	digital	X	i036	-	resource blocked
135	**LT line compressor 5 general alarm**	digital	X	i041	-	resource blocked
136	**LT line compressor 6 general alarm**	digital	X	i046	-	resource blocked
137	**LT line compressor 7 general alarm**	digital	X	i051	-	resource blocked
138	**LT line compressor 8 general alarm**	digital	X	i056	-	resource blocked
139	**LT line compressor 1 high oil level alarm**	digital	X	i019	X	resource blocked

ID	description	alarm type	Priority	input (1)	bypass	effect
140	**LT line compressor 2 high oil level alarm**	digital	X	i024	X	resource blocked
141	**LT line compressor 3 high oil level alarm**	digital	X	i029	X	resource blocked
142	**LT line compressor 4 high oil level alarm**	digital	X	i034	X	resource blocked
143	**LT line compressor 5 high oil level alarm**	digital	X	i039	X	resource blocked
144	**LT line compressor 6 high oil level alarm**	digital	X	i044	X	resource blocked
145	**LT line compressor 7 high oil level alarm**	digital	X	i049	X	resource blocked
146	**LT line compressor 8 high oil level alarm**	digital	X	i054	X	resource blocked
147	**LT line compressor 1 low oil level alarm**	digital	X	i025	X	resource blocked
148	**LT line compressor 2 low oil level alarm**	digital	X	i020	X	resource blocked
149	**LT line compressor 3 low oil level alarm**	digital	X	i025	X	resource blocked
150	**LT line compressor 4 low oil level alarm**	digital	X	i030	X	resource blocked
151	**LT line compressor 5 low oil level alarm**	digital	X	i035	X	resource blocked
152	**LT line compressor 6 low oil level alarm**	digital	X	i040	X	resource blocked
153	**LT line compressor 7 low oil level alarm**	digital	X	i045	X	resource blocked
154	**LT line compressor 8 low oil level alarm**	digital	X	i050	X	resource blocked
193	**HT line motor protection inverter alarm**	digital	X	i059	-	resource blocked
200	**HT line low pressure switch alarm**	digital	X	i058	X	plant shutdown
201	**HT line high suction pressure alarm**	input	X	11P - 12P	X	plant shutdown
202	**HT line low suction pressure alarm**	input	X	11P - 12P	X	plant shutdown
203	**HT line high discharge pressure alarm**	input	X	14P	X	plant shutdown
204	**HT line high discharge temperature alarm**	input	X	15P	X	plant shutdown
205	**HT line low superheat alarm**	input	X	13P/12P (1)	X	plant shutdown
206	**HT line high superheat alarm**	input	X	13P/12P (1)	X	plant shutdown
207	**HT line compressor 1 thermal switch alarm**	digital	X	i060	-	resource blocked
208	**HT line compressor 2 thermal switch alarm**	digital	X	i065	-	resource blocked
209	**HT line compressor 3 thermal switch alarm**	digital	X	i070	-	resource blocked
210	**HT line compressor 4 thermal switch alarm**	digital	X	i075	-	resource blocked
211	**HT line compressor 5 thermal switch alarm**	digital	X	i080	-	resource blocked
212	**HT line compressor 6 thermal switch alarm**	digital	X	i085	-	resource blocked
213	**HT line compressor 7 thermal switch alarm**	digital	X	i090	-	resource blocked
214	**HT line compressor 8 thermal switch alarm**	digital	X	i095	-	resource blocked
215	**HT line compressor 1 high pressure alarm**	digital	X	i061	X	resource blocked
216	**HT line compressor 2 high pressure alarm**	digital	X	i066	X	resource blocked
217	**HT line compressor 3 high pressure alarm**	digital	X	i071	X	resource blocked
218	**HT line compressor 4 high pressure alarm**	digital	X	i076	X	resource blocked
219	**HT line compressor 5 high pressure alarm**	digital	X	i081	X	resource blocked
220	**HT line compressor 6 high pressure alarm**	digital	X	i086	X	resource blocked

ID	description	alarm type	Priority	input (1)	bypass	effect
221	**HT line compressor 7 high pressure alarm**	digital	X	i091	X	resource blocked
222	**HT line compressor 8 high pressure alarm**	digital	X	i096	X	resource blocked
231	**HT line compressor 1 general alarm**	digital	X	i064	-	resource blocked
232	**HT line compressor 2 general alarm**	digital	X	i069	-	resource blocked
233	**HT line compressor 3 general alarm**	digital	X	i074	-	resource blocked
234	**HT line compressor 4 general alarm**	digital	X	i079	-	resource blocked
235	**HT line compressor 5 general alarm**	digital	X	i084	-	resource blocked
236	**HT line compressor 6 general alarm**	digital	X	i089	-	resource blocked
237	**HT line compressor 7 general alarm**	digital	X	i094	-	resource blocked
238	**HT line compressor 8 general alarm**	digital	X	i099	-	resource blocked
239	**HT line compressor 1 high oil level alarm**	digital	X	i062	X	resource blocked
240	**HT line compressor 2 high oil level alarm**	digital	X	i067	X	resource blocked
241	**HT line compressor 3 high oil level alarm**	digital	X	i072	X	resource blocked
242	**HT line compressor 4 high oil level alarm**	digital	X	i077	X	resource blocked
243	**HT line compressor 5 high oil level alarm**	digital	X	i082	X	resource blocked
244	**HT line compressor 6 high oil level alarm**	digital	X	i087	X	resource blocked
245	**HT line compressor 7 high oil level alarm**	digital	X	i092	X	resource blocked
246	**HT line compressor 8 high oil level alarm**	digital	X	i097	X	resource blocked
247	**HT line compressor 1 low oil level alarm**	digital	X	i063	X	resource blocked
248	**HT line compressor 2 low oil level alarm**	digital	X	i068	X	resource blocked
249	**HT line compressor 3 low oil level alarm**	digital	X	i073	X	resource blocked
250	**HT line compressor 4 low oil level alarm**	digital	X	i078	X	resource blocked
251	**HT line compressor 5 low oil level alarm**	digital	X	i083	X	resource blocked
252	**HT line compressor 6 low oil level alarm**	digital	X	i088	X	resource blocked
253	**HT line compressor 7 low oil level alarm**	digital	X	i093	X	resource blocked
254	**HT line compressor 8 low oil level alarm**	digital	X	i098	X	resource blocked
255	**Compressor 1 thermal switch alarm parallel compression line**	digital	X	i114	-	resource blocked
256	**Compressor 2 thermal switch alarm parallel compression line**	digital	X	i119	-	resource blocked
257	**Compressor 3 thermal switch alarm parallel compression line**	digital	X	i124	-	resource blocked
258	**Compressor 4 thermal switch alarm parallel compression line**	digital	X	i129	-	resource blocked
259	**High pressure compressor 1 alarm parallel compression line**	digital	X	i115	X	resource blocked
260	**High pressure compressor 2 alarm parallel compression line**	digital	X	i120	X	resource blocked
261	**High pressure compressor 3 alarm parallel compression line**	digital	X	i125	X	resource blocked

ID	description	alarm type	Priority	input (1)	bypass	effect
262	**High pressure compressor 4 alarm parallel compression line**	digital	X	i130	X	resource blocked
267	**Compressor 1 general alarm parallel compression line**	digital	X	i118	-	resource blocked
268	**Compressor 2 general alarm parallel compression line**	digital	X	i123	-	resource blocked
269	**Compressor 3 general alarm parallel compression line**	digital	X	i128	-	resource blocked
270	**Compressor 4 general alarm parallel compression line**	digital	X	i133	-	resource blocked
271	**Compressor 1 high oil level alarm parallel compression line**	digital	X	i121	X	resource blocked
272	**Compressor 2 high oil level alarm parallel compression line**	digital	X	i126	X	resource blocked
273	**Compressor 3 high oil level alarm parallel compression line**	digital	X	i131	X	resource blocked
274	**Compressor 4 high oil level alarm parallel compression line**	digital	X	i136	X	resource blocked
275	**Compressor 1 low oil level alarm parallel compression line**	digital	X	i117	X	resource blocked
276	**Compressor 2 low oil level alarm parallel compression line**	digital	X	i122	X	resource blocked
277	**Compressor 3 low oil level alarm parallel compression line**	digital	X	i127	X	resource blocked
278	**Compressor 4 low oil level alarm parallel compression line**	digital	X	i132	X	resource blocked
281	**Parallel compression line motor protection inverter alarm**	digital	X	i137	X	resource blocked
283	**CO2 low level alarm**	input	X	38P	X	plant shutdown
284	**Liquid level analogue input failure**	digital	X	i141	-	warning - display only
285	**Oil high temperature alarm**	input	X	40P	-	plant shutdown
286	**Configuration error alarm**	digital	-	NA	-	plant shutdown
287	**Data recording error**	digital	-	NA	-	warning - display only
288	**Maintenance request for exceeded compressor hours**	digital	-	NA	-	resource blocked
289	**Parallel compression line high superheat alarm**	input	X	41P	X	resource blocked
290	**Line low superheat alarm parallel compression**	input	X	41P	X	resource blocked
291	**General purpose regulator 1 alarm**	input	X	03P	-	- (3)
292	**General purpose regulator 2 alarm**	input	X	04P	-	- (3)
293	**General purpose regulator 3 alarm**	input	X	05P	-	- (3)
294	**General purpose regulator 4 alarm**	input	X	06P	-	- (3)
295	**General purpose regulator 1 warning**	input	X	03P	-	- (3)

ID	description	alarm type	Priority	input (1)	bypass	effect
296	**General purpose regulator 2 warning**	input	X	04P	-	- (3)
297	**General purpose regulator 3 warning**	input	X	05P	-	- (3)
298	**General purpose regulator 4 warning**	input	X	06P	-	- (3)
299	**Heat recovery 1 inlet/outlet temperature difference too low alarm**	input	-	24P	X	resource blocked
300	**Heat recovery 2 inlet/outlet temperature difference too low alarm**	input	-	31P	X	resource blocked
301	**General purpose regulator 1 probe alarm**	probe	-	03P	-	resource blocked
302	**General purpose regulator 2 probe alarm**	probe	-	04P	-	resource blocked
303	**General purpose regulator 3 probe alarm**	probe	-	05P	-	resource blocked
304	**General purpose regulator 4 probe alarm**	probe	-	06P	-	resource blocked
305	**Oil Pressure High**	analog	X		X	warning - display only
306	**Oil Pressure Low**	analog	X		X	warning - display only
307	**Connect File Error**	digital	-		-	warning - display only
308	**HP XVD Wiring Fault**	digital	-		-	plant shutdown
309	**FG XVD Wiring Fault**	digital	-		-	plant shutdown
310	**HP XVD Alarm**	digital	-		-	plant shutdown
311	**FG XVD Alarm**	digital	-		-	plant shutdown

(1) Alarms powered by probe with a backup: if the probe is inoperable, the backup probe, where configured, will be used instead. In the table they are indicated in the following manner: main probe/backup probe.
NOTE. Alarms 105/106: 9P - 07P converted in temperature (or 08P backup converted in temperature)
NOTE. Alarms 205/206: 13P – 11P converted in temperature (or 12P backup in temperature)
(2) no serial communication between controller and expansions
(3) generic alarms, no effect on regulation

If there is no communication between the controller and the expansions the compressors connected to the relative expansions are blocked immediately. After a fixed time of 15 seconds, the errors on the probes connected to the relative expansions are measured. In the event of disconnection, the plant should be restarted, and the relative alarm signalled.

CHAPTER 10
Data logger and time bands

10.1. Time bands

EWCM 9000 PRO has time bands for managing scheduled activities.
The time bands are enabled in the parameter enabled by the parameter CHP.
Two time band modes are available

- Every week: similar settings for every day of the week (profile 1).
- “5 + 2”: one setting from Monday to Friday (profile 1), another profile for the weekend (profile 2).
- “6 + 1”: one setting for Monday to Saturday (profile 1), another profile for Sunday (profile 2).

Selecting the “6 + 1 (Monday to Saturday)” operating mode, there are two available profiles:

For each profile (profile 1 and profile 2) 4 time bands are available and enabled independently. Each time band has an event start and stop time (hour and minutes).
An example of the menu for enabling events in two profiles profile 1 (Monday to Saturday) and profile 2 (Sunday):

The following functions are available in the time bands:

- Anti noise
- Capacity limitation (Displacement Limiter) for both LT and HT lines
- Economy mode for both LT and HT lines
- Auxiliary (Aux1, Aux2, Aux3, Aux4)
- Valve Synchronization.

10.2. Time Bands table

LABEL	LABEL	PAR. VALUE ADDRESS	DATA SIZE	CPL	DESCRIPTION	RANGE	VIS	DEFAULT	M.U.	LEVEL
10.2.6.1. Timeb										
CHP	Choose profile	17731	WORD	-	Time band profile 0= disabled, 1=weekly, 2=”5+2” (Mon-Fri / Sat-Sun), 3=”6+1” (Mon-Sat / Sun),	0...3	-	0	num	1
t1	Event 1 enable	17796	WORD	-	Event 1 enable 0= disabled; 1= enabled	0...1	-	0	flag	1
t2-h	Event 1 start hour	17732	WORD	-	Event 1 start hours	0...23	t1 = 1	0	h	1
t2-m	Event 1 start minutes	17733	WORD	-	Event 1 start minutes	0...59	t1 = 1	0	min	1
t3-h	Event 1 stop hour	17734	WORD	-	Event 1 stop hours	0...23	t1 = 1	0	h	1
t3-m	Event 1 stop minutes	17735	WORD	-	Event 1 stop minutes	0...59	t1 = 1	0	min	1
t4	Event 1 antinoise	17736	WORD	-	Event 1 antinoise enable	0...1	t1 = 1	0	flag	1
t5	Event 1 cap.limit.	17737	WORD	-	Event 1 power limitation enable	0...1	t1 = 1	0	flag	1
t6	Event 1 economy	17738	WORD	-	Event 1 economy enable	0...1	t1 = 1	0	flag	1
t7	Event 1 aux 1 enable	17739	WORD	-	Event 1 aux 1 enable	0...1	t1 = 1	0	flag	1
t8	Event 1 aux 2 enable	18235	WORD	-	Event 1 aux 2 enable	0...1	-	0	flag	1
t9	Event 1 aux 3 enable	18239	WORD	-	Event 1 aux 3 enable	0...1	-	0	flag	1
t10	Event 1 aux 4 enable	18243	WORD	-	Event 1 aux 4 enable	0...1	-	0	flag	1
t11	Event 2 enable	17797	WORD	-	Event 2 enable	0...1	-	0	flag	1
t12-h	Event 2 start hour	17740	WORD	-	Event 2 start hours	0...23	t8 = 1	0	h	1
t12-m		17741	WORD	-	Event 2 start minutes	0...59	t8 = 1	0	min	1
t13-h	Event 2 stop hour	17742	WORD	-	Event 2 stop hours	0...23	t8 = 1	0	h	1
t13-m		17743	WORD	-	Event 2 stop minutes	0...59	t8 = 1	0	min	1
t14	Event 2 antinoise	17744	WORD	-	Event 2 antinoise enable	0...1	t8 = 1	1	flag	1

LABEL	LABEL	PAR. VALUE ADDRESS	DATA SIZE	CPL	DESCRIPTION	RANGE	VIS	DEFAULT	M.U.	LEVEL
t15	Event 2 cap.limit.	17745	WORD	-	Event 2 power limitation enable	0...1	t8 = 1	0	flag	1
t16	Event 2 economy	17746	WORD	-	Event 2 economy enable	0...1	t8 = 1	0	flag	1
t17	Event 2 aux 1 enable	17747	WORD	-	Event 2 aux 1 enable	0...1	t8 = 1	0	flag	1
t18	Event 2 aux 2 enable	18236	WORD	-	Event 2 aux 2 enable	0...1	-	0	flag	1
t19	Event 2 aux 3 enable	18240	WORD	-	Event 2 aux 3 enable	0...1	-	0	flag	1
t20	Event 2 aux 4 enable	18244	WORD	-	Event 2 aux 4 enable	0...1	-	0	flag	1
t21	Event 3 enable	17798	WORD	-	Event 3 enable	0...1	-	0	flag	1
t22-h	Event 3 start hour	17748	WORD	-	Event 3 start hours	0...23	t15 = 1	0	h	1
t22-m		17749	WORD	-	Event 3 start minutes	0...59	t15 = 1	0	min	1
t23-h	Event 3 stop hour	17750	WORD	-	Event 3 stop hours	0...23	t15 = 1	0	h	1
t23-m		17751	WORD	-	Event 3 stop minutes	0...59	t15 = 1	0	min	1
t24	Event 3 antinoise	17752	WORD	-	Event 3 antinoise enable	0...1	t15 = 1	0	flag	1
t25	Event 3 cap.limit.	17753	WORD	-	Event 3 power limitation enable	0...1	t15 = 1	0	flag	1
t26	Event 3 economy	17754	WORD	-	Event 3 economy enable	0...1	t15 = 1	0	flag	1
t27	Event 3 aux 1 enable	17755	WORD	-	Event 3 aux 1 enable	0...1	t15 = 1	0	flag	1
t28	Event 3 aux 2 enable	18237	WORD	-	Event 3 aux 2 enable	0...1	-	0	flag	1
t29	Event 3 aux 3 enable	18241	WORD	-	Event 3 aux 3 enable	0...1	-	0	flag	1
t30	Event 3 aux 4 enable	18245	WORD	-	Event 3 aux 4 enable	0...1	-	0	flag	1
t31	Event 4 enable	17799	WORD	-	Event 4 enable	0...1	-	0	flag	1
t32-h	Event 4 start hour	17756	WORD	-	Event 4 start hours	0...23	t22 = 1	0	h	1
t32-m		17757	WORD	-	Event 4 start minutes	0...59	t22 = 1	0	min	1
t33-h	Event 4 stop hour	17758	WORD	-	Event 4 stop hours	0...23	t22 = 1	0	h	1
t33-m		17759	WORD	-	Event 4 stop minutes	0...59	t22 = 1	0	min	1

LABEL	LABEL	PAR. VALUE ADDRESS	DATA SIZE	CPL	DESCRIPTION	RANGE	VIS	DEFAULT	M.U.	LEVEL
t34	Event 4 antinoise	17760	WORD	-	Event 4 antinoise enable	0...1	t22 = 1	0	flag	1
t35	Event 4 cap.limit.	17761	WORD	-	Event 4 power limitation enable	0...1	t22 = 1	0	flag	1
t36	Event 4 economy	17762	WORD	-	Event 4 economy enable	0...1	t22 = 1	0	flag	1
t37	Event 4 aux 1 enable	17763	WORD	-	Event 4 aux 1 enable	0...1	t22 = 1	0	flag	1
t38	Event 4 aux 2 enable	18238	WORD	-	Event 4 aux 2 enable	0...1	-	0	flag	1
t39	Event 4 aux 3 enable	18242	WORD	-	Event 4 aux 3 enable	0...1	-	0	flag	1
t40	Event 4 aux 4 enable	18246	WORD	-	Event 4 aux 4 enable	0...1	-	0	flag	1
t41	Event 1 enable	17800	WORD	-	Event 1 enable	0...1	-	0	flag	1
t42-h	Event 1 start hour	17764	WORD	-	Event 1 start hours	0...23	t29 = 1	0	h	1
t42-m		17765	WORD	-	Event 1 start minutes	0...59	t29 = 1	0	min	1
t43-h	Event 1 stop hour	17766	WORD	-	Event 1 stop hours	0...23	t29 = 1	0	h	1
t43-m		17767	WORD	-	Event 1 stop minutes	0...59	t29 = 1	0	min	1
t44	Event 1 antinoise	17768	WORD	-	Event 1 antinoise enable	0...1	t29 = 1	0	flag	1
t45	Event 1 cap.limit.	17769	WORD	-	Event 1 power limitation enable	0...1	t29 = 1	0	flag	1
t46	Event 1 economy	17770	WORD	-	Event 1 economy enable	0...1	t29 = 1	0	flag	1
t47	Event 1 aux 1 enable	17771	WORD	-	Event 1 aux 1 enable	0...1	t29 = 1	0	flag	1
t48	Event 1 aux 2 enable	18247	WORD	-	Event 1 aux 2 enable	0...1	-	0	flag	1
t49	Event 1 aux 3 enable	18251	WORD	-	Event 1 aux 3 enable	0...1	-	0	flag	1
t85	Event 1 valve synchr. enable	16444	WORD	-	Event 1 valve synchronization enable	0...1	-	0	flag	1
t50	Event 1 aux 4 enable	18255	WORD	-	Event 1 aux 4 enable	0...1	-	0	flag	1
t51	Event 2 enable	17801	WORD	-	Event 2 enable	0...1	-	0	flag	1
t52-h	Event 2 start hour	17772	WORD	-	Event 2 start hours	0...23	t36 = 1	0	h	1
t52-m		17773	WORD	-	Event 2 start minutes	0...59	t36 = 1	0	min	1

LABEL	LABEL	PAR. VALUE ADDRESS	DATA SIZE	CPL	DESCRIPTION	RANGE	VIS	DEFAULT	M.U.	LEVEL
t53-h	Event 2 stop hour	17774	WORD	-	Event 2 stop hours	0...23	t36 = 1	0	h	1
t53-m		17775	WORD	-	Event 2 stop minutes	0...59	t36 = 1	0	min	1
t54	Event 2 antinoise	17776	WORD	-	Event 2 antinoise enable	0...1	t36 = 1	0	flag	1
t55	Event 2 cap.limit.	17777	WORD	-	Event 2 power limitation enable	0...1	t36 = 1	0	flag	1
t56	Event 2 economy	17778	WORD	-	Event 2 economy enable	0...1	t36 = 1	0	flag	1
t57	Event 2 aux 1 enable	17779	WORD	-	Event 2 aux 1 enable	0...1	t36 = 1	0	flag	1
t58	Event 2 aux 2 enable	18248	WORD	-	Event 2 aux 2 enable	0...1	-	0	flag	1
t59	Event 2 aux 3 enable	18252	WORD	-	Event 2 aux 3 enable	0...1	-	0	flag	1
t60	Event 2 aux 4 enable	18256	WORD	-	Event 2 aux 4 enable	0...1	-	0	flag	1
t86	Event 2 valve synchr. enable	16446	WORD	-	Event 2 valve synchronization enable	0...1	-	0	flag	1
t61	Event 3 enable	17802	WORD	-	Event 3 enable	0...1	-	0	flag	1
t62-h	Event 3 start hour	17780	WORD	-	Event 3 start hours	0...23	t43 = 1	0	h	1
t62-m		17781	WORD	-	Event 3 start minutes	0...59	t43 = 1	0	min	1
t63-h	Event 3 stop hour	17782	WORD	-	Event 3 stop hours	0...23	t43 = 1	0	h	1
t63-m		17783	WORD	-	Event 3 stop minutes	0...59	t43 = 1	0	min	1
t64	Event 3 antinoise	17784	WORD	-	Event 3 antinoise enable	0...1	t43 = 1	0	flag	1
t65	Event 3 cap.limit.	17785	WORD	-	Event 3 power limitation enable	0...1	t43 = 1	0	flag	1
t66	Event 3 economy	17786	WORD	-	Event 3 economy enable	0...1	t43 = 1	0	flag	1
t67	Event 3 aux 1 enable	17787	WORD	-	Event 3 aux 1 enable	0...1	t43 = 1	0	flag	1
t68	Event 3 aux 2 enable	18249	WORD	-	Event 3 aux 2 enable	0...1	-	0	flag	1
t69	Event 3 aux 3 enable	18253	WORD	-	Event 3 aux 3 enable	0...1	-	0	flag	1
t70	Event 3 aux 4 enable	18257	WORD	-	Event 3 aux 4 enable	0...1	-	0	flag	1
t87	Event 3 valve synchr. enable	16502	WORD	-	Event 3 valve synchronization enable	0...1	-	0	flag	1

LABEL	LABEL	PAR. VALUE ADDRESS	DATA SIZE	CPL	DESCRIPTION	RANGE	VIS	DEFAULT	M.U.	LEVEL
t71	Event 4 enable	17803	WORD	-	Event 4 enable	0...1	-	0	flag	1
t72-h	Event 4 start hour	17788	WORD	-	Event 4 start hours	0...23	t50 = 1	0	h	1
t72-m		17789	WORD	-	Event 4 start minutes	0...59	t50 = 1	0	min	1
t73-h	Event 4 stop hour	17790	WORD	-	Event 4 stop hours	0...23	t50 = 1	0	h	1
t73-m		17791	WORD	-	Event 4 stop minutes	0...59	t50 = 1	0	min	1
t74	Event 4 antinoise	17792	WORD	-	Event 4 antinoise enable	0...1	t50 = 1	0	flag	1
t75	Event 4 cap.limit.	17793	WORD	-	Event 4 power limitation enable	0...1	t50 = 1	0	flag	1
t76	Event 4 economy	17794	WORD	-	Event 4 economy enable	0...1	t50 = 1	0	flag	1
t77	Event 4 aux 1 enable	17795	WORD	-	Event 4 aux 1 enable	0...1	t50 = 1	0	flag	1
t78	Event 4 aux 2 enable	18250	WORD	-	Event 4 aux 2 enable	0...1	-	0	flag	1
t79	Event 4 aux 3 enable	18254	WORD	-	Event 4 aux 3 enable	0...1	-	0	flag	1
t80	Event 4 aux 4 enable	18258	WORD	-	Event 4 aux 4 enable	0...1	-	0	flag	1
t88	Event 4 valve synchr. enable	16522	WORD	-	Event 4 valve synchronization enable	0...1	-	0	flag	1

10.3. Data logger

During operation, up to 24 analogue inputs (temperatures and/or pressures) can be saved for a specific period in a micro SD card. The data files (up to 99) DATA00.txt, DATA01.txt, ..., DATA99.txt, are saved in CSV format.
To export and analyse the stored data, the user can extract and read the micro SD card. A diagnostics message is managed in the event of an SD card malfunction.

Each probe can be selected separately from remote or from the “Logging” programming menu: in the sub-menu “AI LOG SELECTION” a control box“Y / N” is available for every analogue input logic.

The logging is enabled remotely via the parameter LogEn or in the “Logging” menu:
the “Logging” sub-menu contains the data logging enable and time window function. Parameter window “(in minutes):

If the Data Logger is enabled, during sampling the yellow LED is ON (for the time required for writing on the SD card).

10.3.6.1. Example of data logger file

```
File: Data01.txt
Start recording:           01-mar-16    14:52:36
[min]  [°C]   [°C]   [°C]   [°C]   [°C]
[Time] [HP valve p] [HP rec p]   [HT suct p]  [HT suct t]  [Oil temp.]
0      -3.7         3.7          3.7          3.7          3.7
2      -3.7         3.7          3.7          3.7          3.7
4      -3.7         3.7          3.7          3.7          3.7
Stop recording:            01-mar-16    14:56:47
```

10.4. Data logger table

LABEL		PAR. VALUE ADDRESS	DATA SIZE	CPL	DESCRIPTION	RANGE	DEFAULT	M.U.	LEVEL
10.4.6.1. Data logger									
LogEn	Logging enable	17231	-	-	Data logging enable	0...1	0	num	1
LogInt	Log interval	17232	-	-	Data logging interval	0...999	0	num	1
Log1	Engine room temp.	17970	-	-	Engine room temperature log enable	0...1	0	flag	1
Log2	Elec. cabinet temp.	17971	-	-	Electrical cabinet temperature log enable	0...1	0	flag	1
Log3	GP regulator 1	16904	-	-	General purpose regulator GP 1 probe log enable	0...1	0	flag	1
Log4	GP regulator 2	16905	-	-	General purpose regulator GP 2 probe log enable	0...1	0	flag	1
Log5	GP regulator 3	16906	-	-	General purpose regulator GP 3 probe log enable	0...1	0	flag	1
Log6	GP regulator 4	16907	-	-	General purpose regulator GP 4 probe log enable	0...1	0	flag	1
Log7	LT suction press.	17239	-	-	LT line suction pressure log enable	0...1	0	flag	1
Log8	LT suct. press. bck	17240	-	-	LT line suction pressure backup log enable	0...1	0	flag	1

LABEL		PAR. VALUE ADDRESS	DATA SIZE	CPL	DESCRIPTION	RANGE	DEFAULT	M.U.	LEVEL
Log9	LT suction temp.	17243	-	-	LT line suction temperature log enable	0...1	0	flag	1
Log10	LT discharge temp.	17245	-	-	LT line discharge temperature log enable	0...1	0	flag	1
Log11	HT suction press.	17237	-	-	HT line suction pressure log enable	0...1	0	flag	1
Log12	HT suct. press. bck	17238	-	-	HT line suction pressure backup log enable	0...1	0	flag	1
Log13	HT suction temp.	17242	-	-	HT line suction temperature log enable	0...23	0	flag	1
Log14	HT discharge press.	17241	-	-	HT line discharge pressure log enable	0...59	0	flag	1
Log15	HT discharge temp.	17244	-	-	HT line discharge temperature log enable	0...23	0	flag	1
Log16	HP valve press.	17234	-	-	HP valve pressure log enable	0...59	0	flag	1
Log17	HP valve press. bck	17235	-	-	HP valve pressure backup log enable	0...1	0	flag	1
Log18	External air temp.	17251	-	-	External air temperature log enable	0...1	0	flag	1
Log19	GC out 1	17246	-	-	Gascooler out 1 temperature log enable	0...1	0	flag	1
Log20	GC out 2	17247	-	-	Gascooler out 2 temperature log enable	0...1	0	flag	1
Log21	HR1 CO2 inlet temp.	17256	-	-	Heat recovery 1 CO2 inlet temperature log enable	0...1	0	flag	1
Log22	HR1 CO2 outlet temp.	17257	-	-	Heat recovery 1 CO2 outlet temperature log enable	0...1	0	flag	1
Log23	HR1 H2O inlet temp.	17258	-	-	Heat recovery 1 H2O inlet temperature log enable	0...1	0	flag	1
Log24	HR1 H2O outlet temp.	17259	-	-	Heat recovery 1 H2O outlet temperature log enable	0...1	0	flag	1
Log25	HR1 boil. top temp.	17255	-	-	Heat recovery 1 boiler top temperature log enable	0...1	0	flag	1
Log26	HR1 boil. mid. temp.	17254	-	-	Heat recovery 1 boiler middle temperature log enable	0...1	0	flag	1
Log27	HR1 boil.bott. temp.	17253	-	-	Heat recovery 1 boiler bottom temperature log enable	0...1	0	flag	1
Log28	HR2 CO2 inlet temp.	17263	-	-	Heat recovery 2 CO2 inlet temperature log enable	0...1	0	flag	1
Log29	HR2 CO2 outlet temp.	17264	-	-	Heat recovery 2 CO2 outlet temperature log enable	0...1	0	flag	1
Log30	HR2 H2O inlet temp.	17265	-	-	Heat recovery 2 H2O inlet temperature log enable	0...1	0	flag	1
Log31	HR2 H2O outlet temp.	17266	-	-	Heat recovery 2 H2O outlet temperature log enable	0...1	0	flag	1

LABEL		PAR. VALUE ADDRESS	DATA SIZE	CPL	DESCRIPTION	RANGE	DEFAULT	M.U.	LEVEL
Log32	HR2 boil. top temp.	17262	-	-	Heat recovery 2 boiler top temperature log enable	0...1	0	flag	1
Log33	HR2 boil. mid. temp.	17261	-	-	Heat recovery 2 boiler middle temperature log enable	0...1	0	flag	1
Log34	HR2 boil.bott. temp.	17260	-	-	Heat recovery 2 boiler bottom temperature log enable	0...1	0	flag	1
Log35	Ext.evaporator temp.	17965	-	-	External evaporator temperature log enable	0...1	0	flag	1
Log36	Ext.evaporator press	17966	-	-	External evaporator pressure log enable	0...1	0	flag	1
Log37	HP receiver press.	17236	-	-	Receiver pressure log enable	0...23	0	flag	1
Log38	CO2 level	16968	-	-	CO2 level log enable	0...59	0	min	1
Log39	HE out temp.	17248	-	-	Heat exchanger out temperature log enable	0...23	0	h	1
Log40	Oil temp.	17250	-	-	Oil temperature log enable	0...59	0	min	1
Log41	PC suction temp.	18299	-	-	PC line suction temperature log enable	0...1	0	flag	1

CHAPTER 11
Service Menu

11.1. [6.1/6.2 Output test]

In the menu 6.1/ 6.2 OUTPUT TEST the user can force all digital outputs to 0 (OFF) or 1 (ON), or force the analogue outputs to 0%...100%.
NOTE. The operation is allowed with the controller in standby or ON mode.

11.2. [6.3 Parameter management]

The whole parameters map (including communication parameters) is saved in the internal memory.
From the Service menu, the user can manage the map to save the parameters, the settings or upload the map to restore the default settings.
The menu is 6.3 PARAMETER MANAGEMENT.
The submenus are:

1. Save parameters
2. Save user settings
3. Restore user settings
4. Restore default settings

NOTE. Operation 1-2 can only be done with the USB inserted.

11.2.1. [6.3.2/6.3.3 User Settings]

Similarly to the factory default settings, it is possible to save the user settings: the parameters map defined by the user is saved with operation 6.3.2 and subsequently restored with operation 6.3.3.

NOTE. The operation is allowed only with the controller in standby.

The user settings (and default settings) do not include the following information:
- Compressor running hours.
- Alarm log.

11.2.2. [6.3.4 Factory settings]

The factory settings can be restored with operation 6.3.4.

NOTE. The operation is allowed only with the controller in standby.

11.3. [6.4 Reset compressors hours]

In 6.4 RESET COMPR. HOURS menu user can reset compressor hours.

11.4. [6.5 Versions]

In menu 6.3.5 VERSIONS the user can access all the information on the controller version for alignment and verifying with the Eliwell technical support or internally with customers.

Example of information available in the menu:

Bios644.1	PLC713.7
HMI local	613.11
HMi remote	613.11
CRC appl.	91A9F871
CRC HMI	333C31A2

CHAPTER 12
EWCM 9000-HF programming

EWCM 9000 PRO-HF has 2 USB connectors on the top left-hand side of the front panel.
EWCM 9000 PRO-HF can be connected to a PC via the type B mini USB port and a USB cable:

- USB type A (HOST). Used to connect a USB memory stick when downloading the application, BIOS and parameters.
- Type B mini USB connector (DEVICE.) Used to connect **EWCM 9000 PRO-HF** to a PC via a cable with type B/A mini USB connector for debugging, put into service, downloading and uploading with **FREE Studio (v.3.9.1.2 or greater) / FREE Studio Plus (v.1.0.0)**

EWCM 9000 PRO-HF can also be powered via a type B mini USB cable with limited functions concerning debugging, put into service, downloading and uploading with **FREE Studio (v.3.9.1.2 or greater) / FREE Studio Plus (v.1.0.0)**.
For more information, see the **FREE Studio** software, Programming Guide.

Before powering by connection to the 24 Vac/dc power supply:
1. Disconnect the type B mini USB cable.
2. Power the **EWCM 9000 PRO-HF** via the 24 Vac/dc power supply.
3. Reconnect the type B mini USB cable.

All file uploading/downloading operations must be done with the equipment in stand-by.
When handling the USB memory key, follow the instructions given below to avoid corruption or loss of data during the BIOS download or a malfunction:

NOTICE

INOPERABLE DEVICE

- Use the USB programming key and/or programming cable with the equipment in stand-by.
- Connect the USB memory key only once the word Eliwell has appeared on the display (upload/download parameters only).
- Verify that the USB memory key is correctly inserted.
- Do not remove the USB memory key until the BIOS download has been completed.

Failure to follow these instructions can result in equipment damage.

12.1. Case 1: connection with a USB memory stick

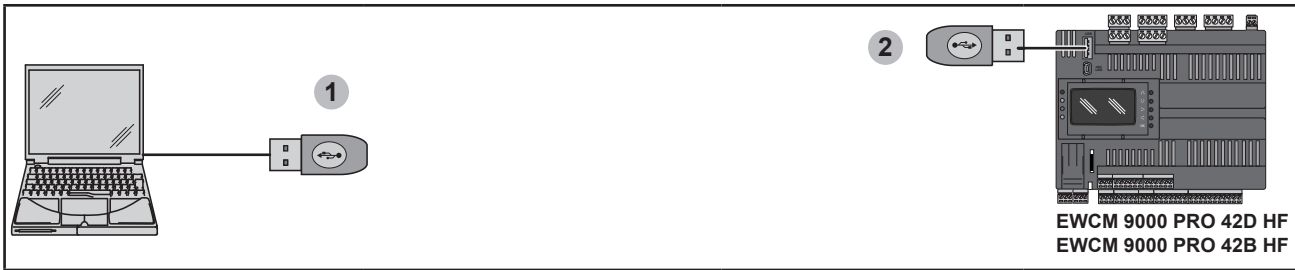

→ Download to the controller		← Upload to the PC	
Parameters (1)	✓	Parameters (1)	✓
Controller application	✓	Controller application	✓
HMI application	✓	HMI application	✓
Data files	✓	Data files	✓
BIOS	✓	BIOS	-

Fig. 97. Connection between PC and EWCM 9000 PRO via USB cable

(1) Upload and download of a parameters map to/from one of more target devices of the same type.

12.2. Case 2: connection to a PC via USB cable

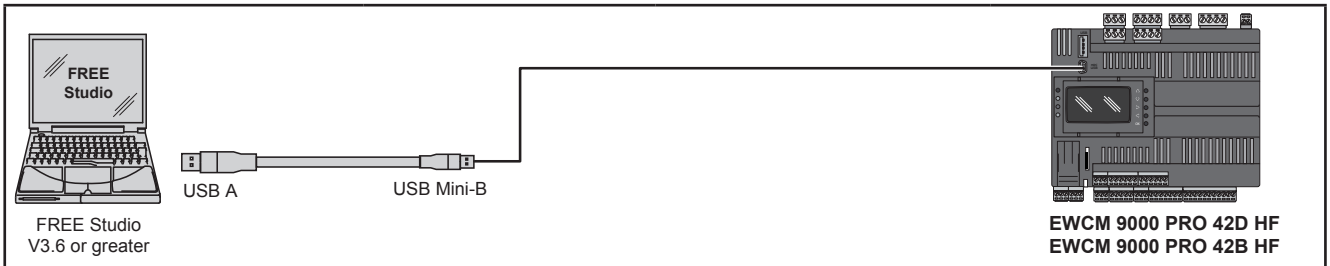

→ Download to the controller		← Upload to the PC	
Parameters (1)	✓	Parameters (1)	✓
Controller application	✓	Controller application	✓
HMI application	✓	HMI application	✓
Data files	✓	Data files	✓
BIOS	-	BIOS	-

Fig. 98. Connection of a USB memory stick to EWCM 9000 PRO

(1) Upload and download of a parameters map to/from one of more target devices of the same type.

NOTE: Do not apply any voltage via the 24 Vac/dc terminals while the device is connected to a PC via a mini USB type B cable.

12.3. Case 3: connection with a PC via Ethernet cable

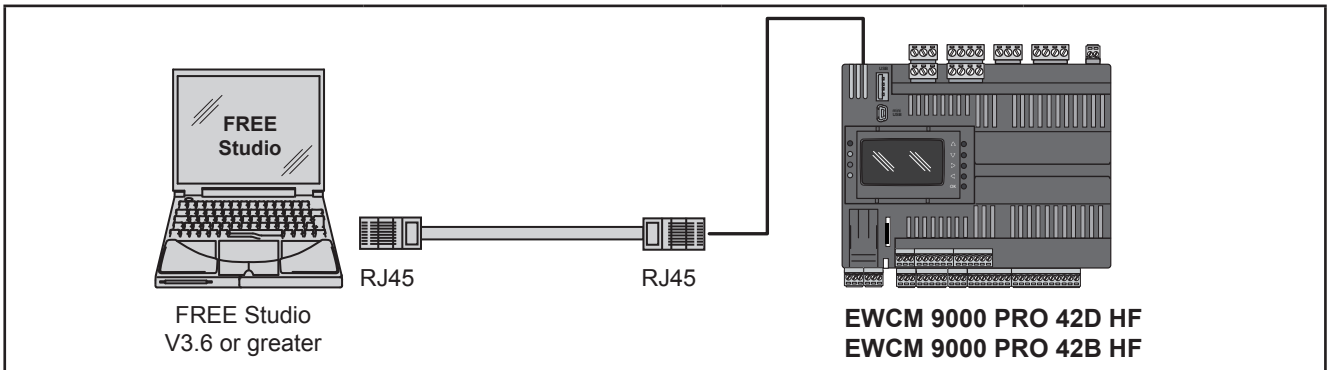

→ Download to the controller		← Upload to the PC	
Parameters (1)	✓	Parameters (1)	✓
Controller application	✓	Controller application	✓
HMI application	✓	HMI application	✓
Data files	✓	Data files	✓
BIOS	✓	BIOS	-

Fig. 99. Connection between PC and EWCM 9000 PRO via Ethernet cable

(1) Upload and download of a parameters map to/from one of more target devices of the same type.

⚠ WARNING

INCORRECT OPERATION OF THE DEVICE

- Connect the programming cable firstly to the PC and then to the controller programming port.
- Disconnect the programming cable from the controller before disconnecting from the PC.

Failure to follow these instructions can result in death, serious injury, or equipment damage.

12.4. Downloading the BIOS

There are two ways of updating the **EWCM 9000 PRO** BIOS:
- download into **EWCM 9000 PRO** from a USB memory stick
- download into **EWCM 9000 PRO** from PC with **FREE Studio (v.3.9.1.2 or greater) / FREE Studio Plus (v.1.0.0)**

12.4.1. Download the BIOS from USB memory stick

1. Find the BIOS file (".bin" extension) in one of the following alternative ways:
   - If **FREE Studio (v.3.9.1.2 or greater) / FREE Studio Plus (v.1.0.0)** is installed on your PC, the BIOS is available in the following position:
     C:\Program Files (x86)\Eliwell\free Studio\Catalog\FreeAdvance\Firmware_644
     <firmware> = firmware644 for **EWCM 9000 PRO**
   - Download the .bin file from the website - firmware update section.
3. Copy the file onto the USB memory stick (for example, msk644_00.bin).
4. Connect the USB memory stick to **EWCM 9000 PRO.**
   The BIOS will be downloaded to the **EWCM 9000 PRO:** during the download the yellow LED flashes. When the download is completed, the green LED flashes twice and then comes on to confirm the successful download.
5. Remove the USB memory stick.
   EWCM 9000 PRO will automatically reset and restart
   If a SYSTEM FAULT (system error) is shown, the error refers to a time out watchdog which occurred during the BIOS update and, in this case, it may be ignored.
   The BIOS has been updated correctly.

12.4.2. Download the BIOS from PC

2. Connect the **EWCM 9000 PRO** (via Ethernet or mini USB type B cable) to the PC.
6. Open the software **FREE Studio (v.3.9.1.2 or greater) / FREE Studio Plus (v.1.0.0)**.
7. Add an **EWCM 9000 PRO** target to the project.
   Select the correct target device. The connections to the BIOS files are:
   C:\<Programs>\Eliwell\free Studio\Catalog\FreeAdvance\<firmware> where <firmware> =Firmware_644
8. Select the target name and click on it.
9. Select BIOS download.
10. Open the .bin file you wish to download.
11. Click the Download button.
    The operation could take a few minutes. If the download is completed correctly, confirmation is given.
12. Disconnect the **EWCM 9000 PRO** from the PC.

CHAPTER 13
Device Manager PRO

13.1. What is Device Manager PRO

13.1.1. Introduction

Device Manager PRO has been developed to support the system installer or configurator after the installation of parametric controllers in the field. Specifically, it allows to perform the following tasks:

- read and write controller system and operating parameters
- view the plant layout and the status of its components
- download and analyze data collected from the field
- update the firmware on the controller

13.1.2. Compatible parametric controllers

Currently, Device Manager PRO can be used to connect and communicate with the following controllers:

	Reference	Description
EWCM 9000 PRO	**EPA00PCTA500**	EWCM 9000 PRO 42B /CO2T DOMINO
	EPAS0PCTA500	EWCM 9000 PRO 42B SSR /CO2T DOMINO
	EPA01PCTA500	EWCM 9000 PRO 42D /CO2T DOMINO
	EPAS1PCTA500	EWCM 9000 PRO 42D SSR /CO2T DOMINO

13.1.3. Installation requirements

The installation of Device Manager PRO requires one of the following operating system:

- Microsoft Windows 7 Professional
- Microsoft Windows 7 Embedded Standard
- Microsoft Windows 8
- Microsoft Windows 8.1
- Microsoft Windows 10

13.2. Related documents

Document title	Reference document code
Device Manager PRO User Guide EN	9MA10294 (EN)

You can download these technical publications and other technical information from our website at:

www.eliwell.com

13.3. About Device Manager PRO

Device Manager PRO is typically used during plant commissioning to set up controller parameters while actually connected to the controller itself.
You can also use Device Manager PRO to work offline. This means that you prepare a project file containing a draft of the plant parameters settings in your office and then download it to the controller and adjust it once in the field.
This method is typically used during plant design, to prepare for commissioning.

For each plant you work on, you need to create a project file in Device Manager PRO. This file contains information on how to connect to the controller, the values of its parameters, and the tracks which are displayed in graphical format.
The project can also contain graphic information on the plant layout and a set of measures whose values can be tracked to test the performance of the elements of the plants (See “13.4.3. SoftScope” page 280)

- Define communication parameters with the controller
- View current settings on the controller
- Adjust controller operating parameters and download them to the controller
- Analyze and adjust operating parameters

13.4. All Parameters menu

The All Parameters menu may shows:
- a complete view of all machine parameters
- view of BIOS parameters only
- view of the application parameters only

13.4.1. Machine parameters

Included list of all BIOS parameters, application and a selection of Status variables, depending on machine configuration.
The parameters are visible in the HMI menu. See Navigation menu
The status variables displayed depends on the machine configuration.
Application parameters follow dynamic display rules as well. Unit of Measures is an example (set point parameters UM = °F will display in °C)

13.4.1.1. BIOS parameters

List of the machine’s BIOS parameters. The Conf.AI and AO Conf. Parameters include base + expansions.
Expansions parameters depend on the number of declared expansions.

13.4.1.2. Machine definition parameters

Includes all application parameters.

Parameters are grouped by function in subfolders:

- System (sys)
- Low temperature (LT)
- High temperature (HT)
- High Pressure (HP)
- Gascooler (GC)
- Heat Recovery 1 (HR1)
- Heat Recovery 2 (HR2)
- Receiver
- Heat Exchanger (HE)
- oil

For each function the parameters are grouped in:

- configuration
- general
- alarms
- IO allocation

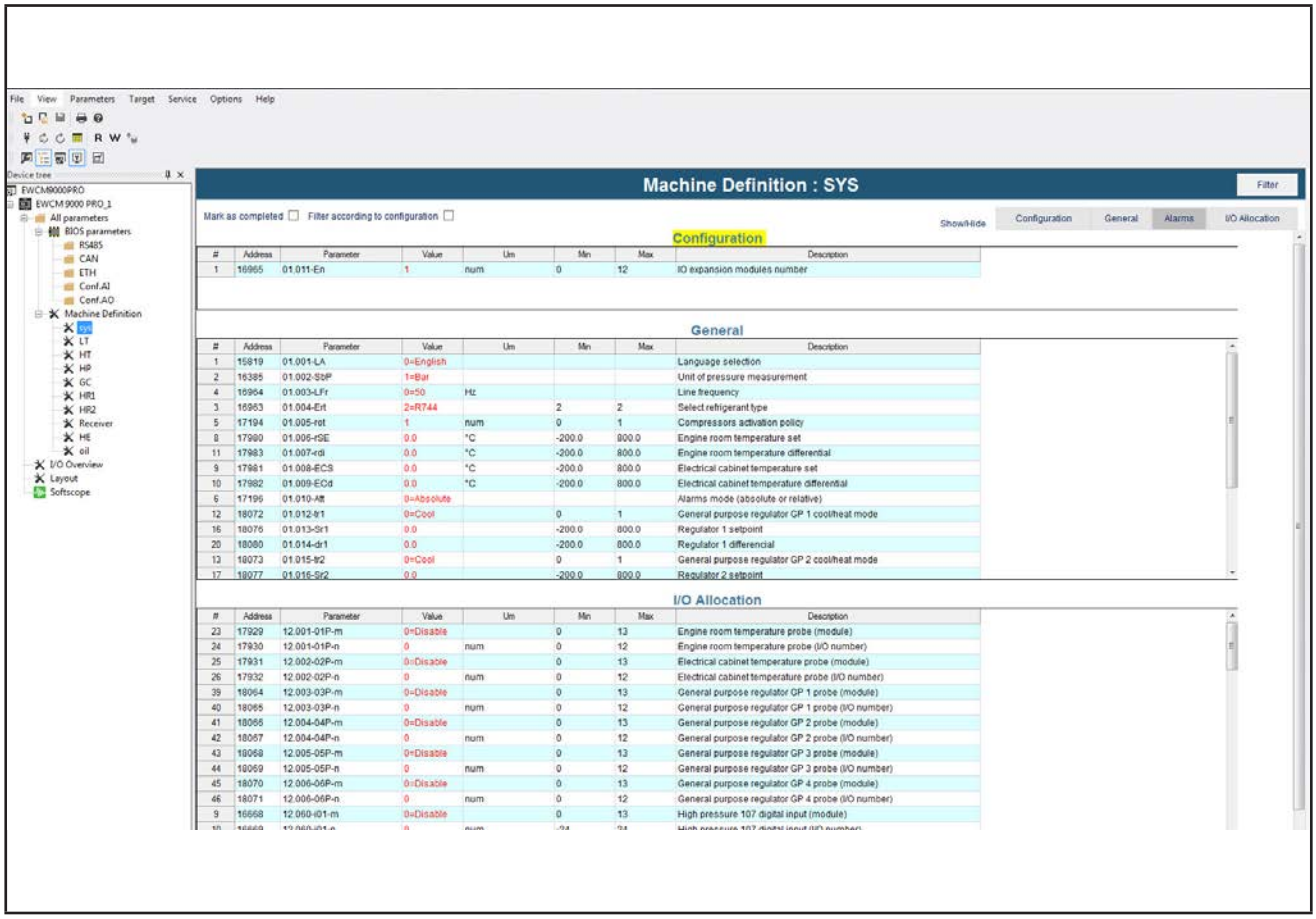

Fig. 100. Machine Definition parameters

13.4.2. I/O Allocation Wizard

You may configure the machine by manually setting all these parameters, including IO allocation parameters.

Alternatively, an I/O Allocation Wizard helps you through a guided procedure.

The system allocates I/Os automatically adding IOs from the base board and then setting the expansion boards for each type of I/O (AI, DI, AO, DO)

Following parameters must be defined first because they are preparatory to the IO allocation wizard.

- number of compressors and inverter number per circuit
- heat recovery presence

I/O Allocation Wizard performs, through a step-by-step procedure, the allocation of the minimum number of resources needed to setup the machine.

The step-by-step procedure is shown in the table below. A list of questions defines the allocation. The questions depend on previous answers: for example if a gascooler has been set with analog control, the number of gascooler fans will not be requested:

Question	Condition
Liquid receiver level digital (true) or analog (false) ?	always present
Gascooler fans digital (true) or analog (false) ?	always present
How many Gascooler digital fans [1...4]?	only if gas cooler is enabled
Heat recovery 1 activation digital input ?	**06.001 - r1tY** Heat recovery 1 mode > 0
Heat recovery 1 mixing 3-way valve ?	**06.001 - r1tY** Heat recovery 1 mode > 0
Heat recovery 1 H2O in/out temperature difference too low alarm ?	**06.001 - r1tY** Heat recovery 1 mode > 0
Heat recovery 1 activation boiler temperature probe: Top (1) Middle (2) Bottom (3) ?	**06.001 - r1tY** Heat recovery 1 mode > 0 Enter proper value
Heat recovery 2 activation digital input ?	**07.001 - r2tY** Heat recovery 2 mode > 0
Heat recovery 2 mixing 3-way valve ?	**07.001 - r2tY** Heat recovery 2 mode > 0
Heat recovery 2 H2O in/out temperature difference too low alarm ?	**07.001 - r2tY** Heat recovery 2 mode > 0
Heat recovery 2 activation boiler temperature probe: Top (1) Middle (2) Bottom (3) ?	**07.001 - r2tY** Heat recovery 2 mode > 0 Enter proper value
Heat Exchanger enabled ?	always present
Heat Exchager digital (true) or analog (false) ?	only if Heat exchanger is enabled

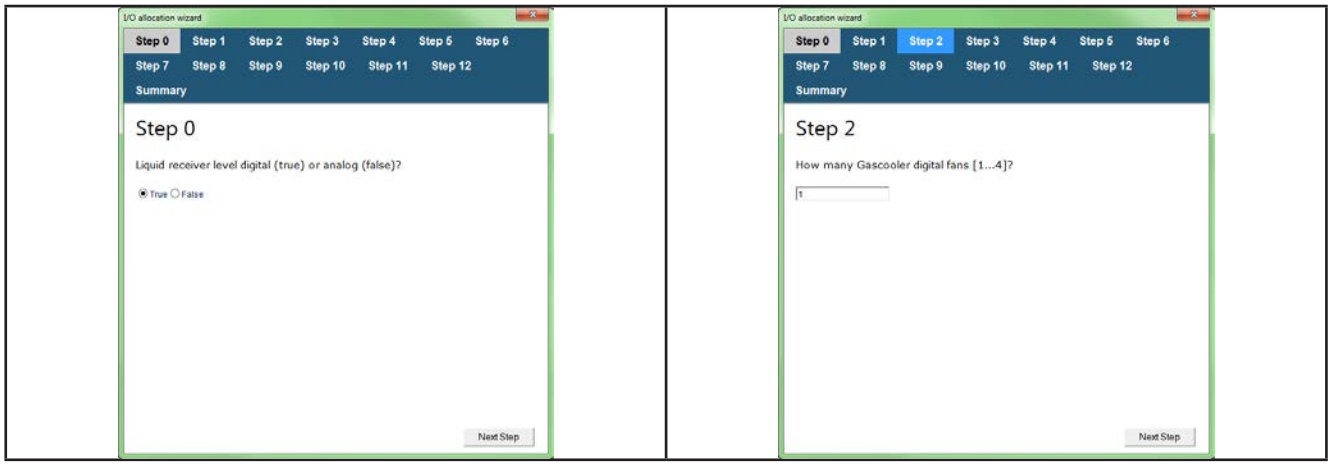

Fig. 101. IO allocation wizard **step 0, step 2**

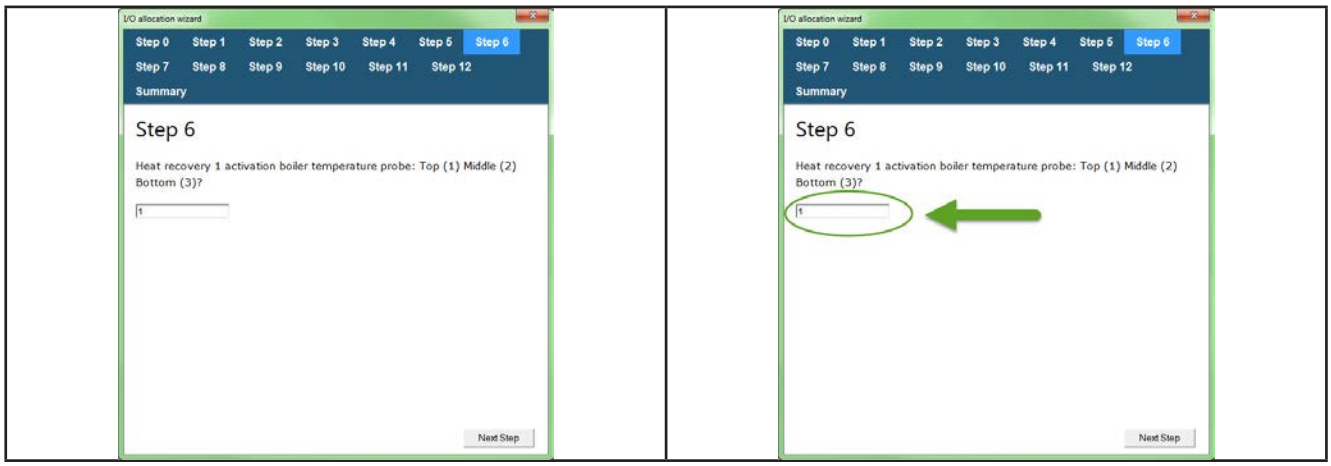

Fig. 102. IO allocation wizard **step 6**

I/O allocation wizard settings are saved in the project file. No need to reset them each time.

- Once the wizard sequence has been completed, by confirming with the OK key *(1)*, the system resets all the allocation parameters and then overwrites the values according on new settings.
- Resorce allocation is based on factory settings. Any modification applied by the user, changing default settings before I/O allocation wizard , is not considered. For example all Analogue Inputs converted to Digital Inputs are allocated as Analog.
- Parameter 01.011 - En defines the number of EXP PRO expansions available in the system. If the current configuration requires a number of expansions greater than 01.011 - En the system automatically allocates the number of expansions required bypassing the parameter manual setting.

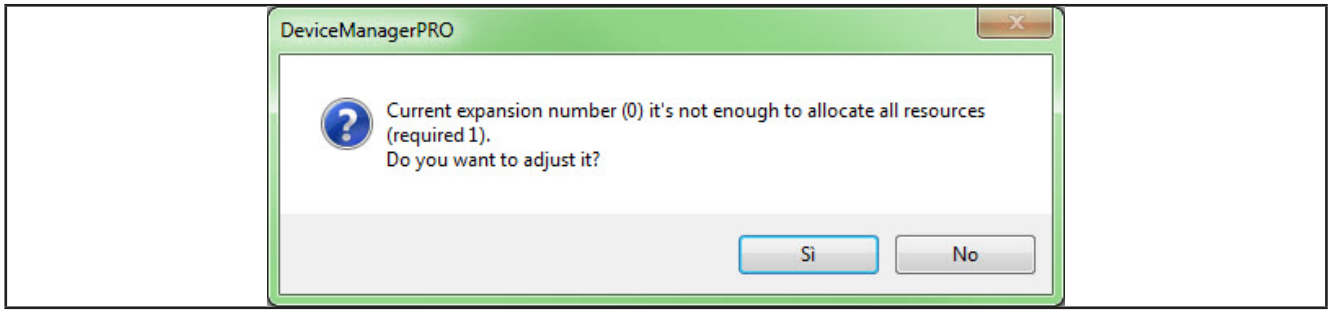

Fig. 103. IO allocation wizard **number of expansions required**

A window dialog appears to inform the user to adjust the number of expansions to be allocated.

1) Always answer the step questions, and enter the related numbers where requested. See step table previsous page. If not the OK key will not be available.

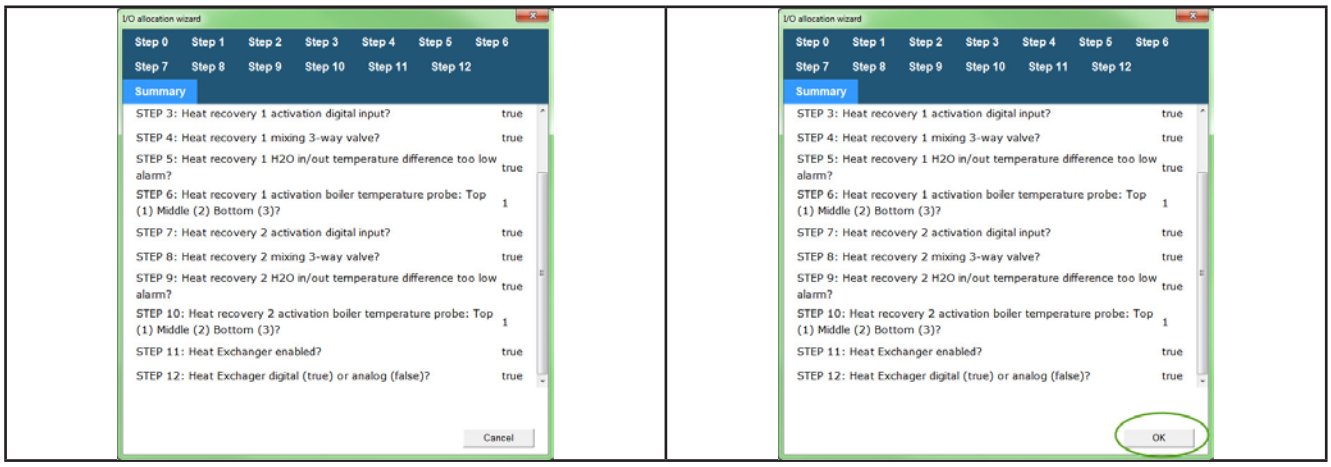

Fig. 104. IO allocation wizard **summary**

IO Allocation verification

The IO Allocation verification function is available to verify any IO overlaps:

The system verifies:

- Input physical resources can be assigned to more than one logical input resource, any duplication will generate a warning message only.
- Two logical output resources cannot be assigned on same physical output resource: any duplication is reported as an error.
- The allocation must allow to allocate a digital on an analogue if from the BIOS the analogue is configured as digital.

Any configuration error, is displayed in the output window and by highlighting relevant parameters in different colors as follows:

- orange: configuration warning
- red: configuration error

NOTE. A configuration errore will be reported on the controller as a blocking alarm.

13.4.2.1. I/O Overview menu

I/O Overview menu display allocation resources result, in groups, as follows

- lower board allocation
- upper board allocation
- expansion EXP PRO allocation
- a summary table

You may print each page accordingly.

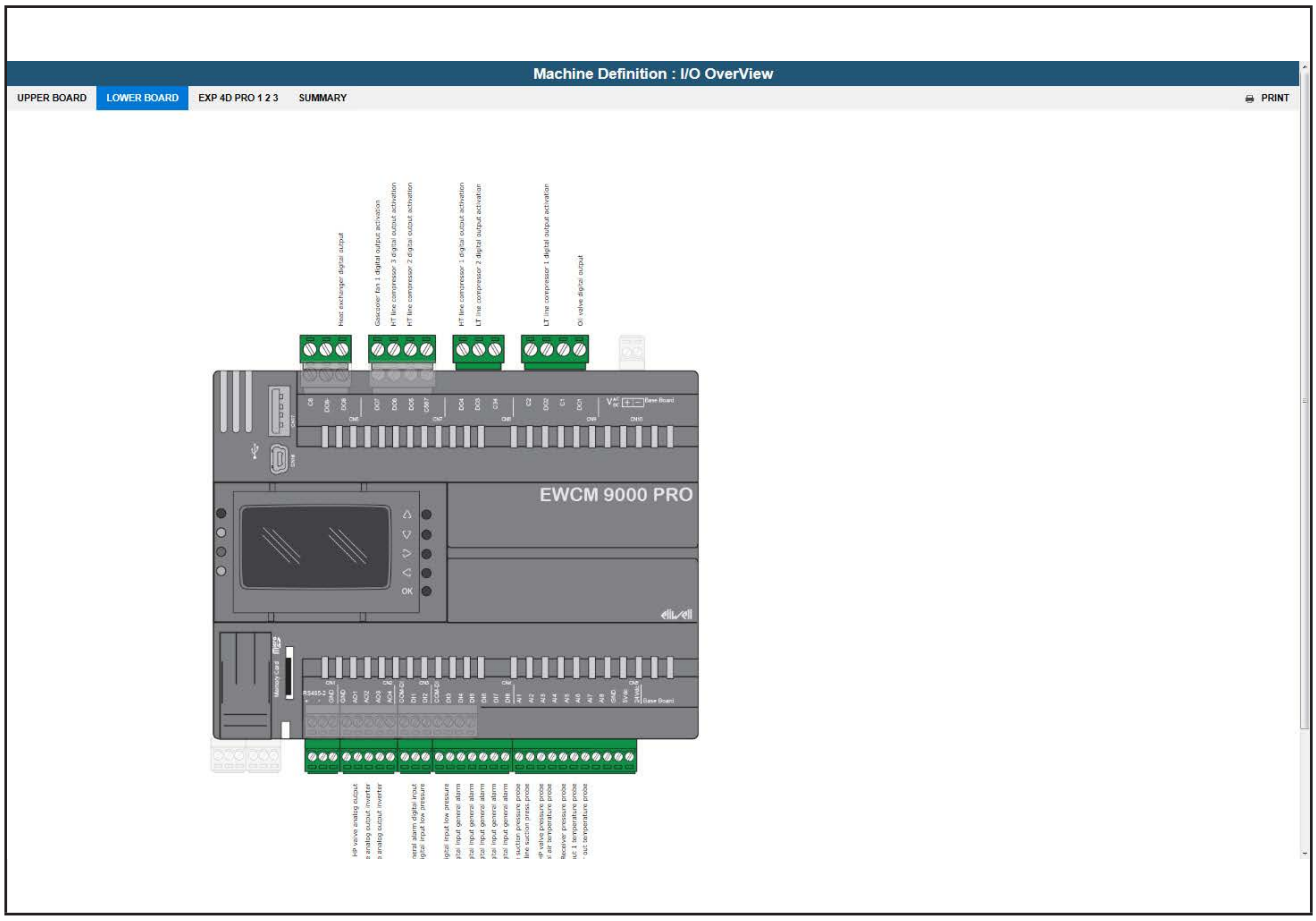

Fig. 105. I/O overview menu

13.4.3. Layout

Layout displays the status of the system in real time

The resoureces displayed depends on the number of selected resources. For example, if a compressor is not configured, it is displayed in gray color.

NOTE. Connect to the target to display the machine layout configuration.

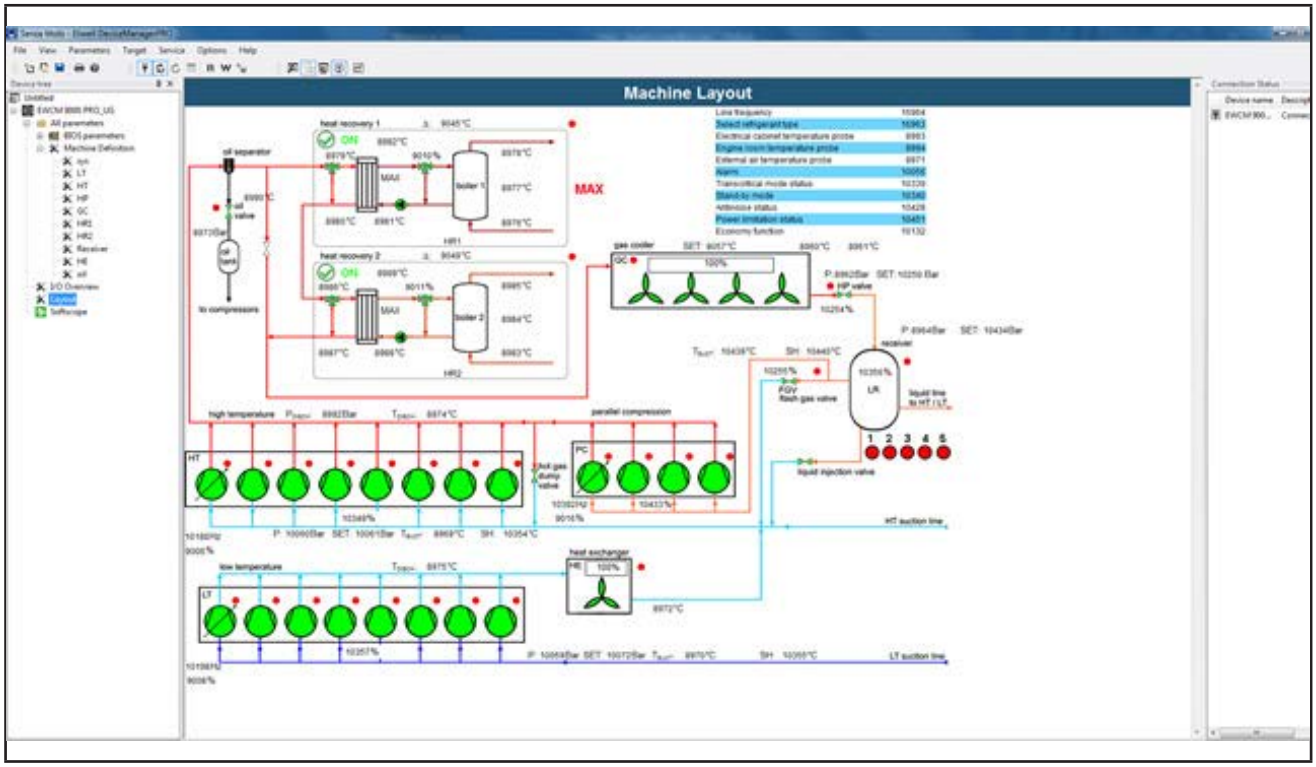

Fig. 106. I/O overview menu

13.4.4. SoftScope

Softscope allows you to view up to 10 simultaneous tracks between a selection of controller resources.
The list of available resources is dynamic depending on the machine configuration.
List of resources is available in the following table

address	resource
16963	01.004-Ert : Select refrigerant type
16964	01.003-LFr : Line frequency
8960	GC out 1 : Gascooler out 1 temperature probe
8961	GC out 2 : Gascooler out 2 temperature probe
8962	HP P : HP valve pressure probe
8964	LR P : Receiver pressure probe
8969	HT suct T : HT line suction temperature probe
8970	LT suct T : LT line suction temperature probe
8971	Ext Air T : External air temperature probe
8972	HE out T : Heat exchanger out temperature probe
8974	HT disch T : HT line discharge temperature probe
8975	LT disch T : LT line discharge temperature probe
8976	HR1 bottom : Heat recovery 1 temperature probe boiler bottom
8977	HR1 middle : Heat recovery 1 temperature probe boiler middle
8978	HR1 top : Heat recovery 1 temperature probe boiler top
8979	HR1 CO2 in : Heat recovery 1 temperature probe CO2 inlet
8980	HR1 CO2 out : Heat recovery 1 temperature probe CO2 outlet
8981	HR1 H2O in : Heat recovery 1 temperature probe H2O inlet
8982	HR1 H2O out : Heat recovery 1 temperature probe H2O outlet
8983	HR2 bottom : Heat recovery 2 temperature probe boiler bottom
8984	HR2 middle : Heat recovery 2 temperature probe boiler middle
8985	HR2 top : Heat recovery 2 temperature probe boiler top
8986	HR2 CO2 in : Heat recovery 2 temperature probe CO2 inlet
8987	HR2 CO2 out : Heat recovery 2 temperature probe CO2 outlet
8988	HR2 H2O in : Heat recovery 2 temperature probe H2O inlet
8989	HR2 H2O out : Heat recovery 2 temperature probe H2O outlet
8990	Oil T : Oil temperature probe
8992	HT disch P : HT line discharge pressure probe
8993	Elec cab T : Electrical cabinet temperature probe
8994	Mach room T : Engine room temperature probe
9004	St1 : Heat recovery 1 max power request status
9006	HT inv 1 % : HT line inverter analog output
9008	LT inv 1 % : LT line inverter analog output
9010	HR1 valve % : Heat recovery 1 analog output valve
9011	HR2 valve % : Heat recovery 2 analog output valve
9015	HE fan % : Heat exchanger fan analog output
9016	PC inv 1 % : PC line inverter analog output
9034	HR1 act req : Heat recovery 1 activation digital input
9036	HR2 act req : Heat recovery 2 activation digital input
9045	HR1 delta : Heat recovery 1 in/out temperature delta
9049	HR2 delta : Heat recovery 2 in/out temperature delta
9057	GC set : Gascooler setpoint

address	resource
9191	Oil valve act : Oil valve digital output
9195	HT CP1 act : HT line compressor 1 digital output activation
9196	HT CP2 act : HT line compressor 2 digital output activation
9197	HT CP3 act : HT line compressor 3 digital output activation
9198	HT CP4 act : HT line compressor 4 digital output activation
9199	HT CP5 act : HT line compressor 5 digital output activation
9200	HT CP6 act : HT line compressor 6 digital output activation
9201	HT CP7 act : HT line compressor 7 digital output activation
9202	HT CP8 act : HT line compressor 8 digital output activation
9205	Heat exch : Heat exchanger digital output
9208	LT CP1 act : LT line compressor 1 digital output activation
9209	LT CP2 act : LT line compressor 2 digital output activation
9210	LT CP3 act : LT line compressor 3 digital output activation
9211	LT CP4 act : LT line compressor 4 digital output activation
9212	LT CP5 act : LT line compressor 5 digital output activation
9213	LT CP6 act : LT line compressor 6 digital output activation
9214	LT CP7 act : LT line compressor 7 digital output activation
9215	LT CP8 act : LT line compressor 8 digital output activation
9218	HR1 bypass : Heat recovery 1 digital output bypass valve
9219	HR1 pump : Heat recovery 1 digital output H2O pump
9220	HR2 bypass : Heat recovery 2 digital output bypass valve
9221	HR2 pump : Heat recovery 2 digital output H2O pump
9224	HT HG dump : HT line digital output hot gas dump
9226	Liquid inj : Liquid injection digital output
9229	Fan 1 act : Gascooler fan 1 digital output activation
9230	Fan 2 act : Gascooler fan 2 digital output activation
9231	Fan 3 act : Gascooler fan 3 digital output activation
9232	Fan 4 act : Gascooler fan 4 digital output activation
9237	PC CP1 act : PC line compressor 1 digital output activation
9238	PC CP2 act : PC line compressor 2 digital output activation
9239	PC CP3 act : PC line compressor 3 digital output activation
9240	PC CP4 act : PC line compressor 4 digital output activation
9245	AL1 : Gascooler alarm
9246	AL2 : Heat recovery 1 alarm
9247	AL3 : Heat recovery 2 alarm
9248	AL4 : Oil alarm
10056	Alm : Alarm
10059	LT suct P wrk : LT line suction pressure probe
10060	HT suct P wrk : HT line suction pressure probe
10061	HT set : HT line regulation set
10072	LT set : LT line regulation set
10097	AL6 : HT line total number of alarms compressor 1
10098	AL7 : HT line total number of alarms compressor 2
10099	AL8 : HT line total number of alarms compressor 3
10100	AL9 : HT line total number of alarms compressor 4
10101	AL10 : HT line total number of alarms compressor 5
10102	AL11 : HT line total number of alarms compressor 6
10103	AL12 : HT line total number of alarms compressor 7

address	resource
10104	AL13 : HT line total number of alarms compressor 8
10105	AL14 : LT line total number of alarms compressor 1
10106	AL15 : LT line total number of alarms compressor 2
10107	AL16 : LT line total number of alarms compressor 3
10108	AL17 : LT line total number of alarms compressor 4
10109	AL18 : LT line total number of alarms compressor 5
10110	AL19 : LT line total number of alarms compressor 6
10111	AL20 : LT line total number of alarms compressor 7
10112	AL21 : LT line total number of alarms compressor 8
10132	Eco : Economy function
10177	HR1 : Heat recovery 1 state
10178	HR2 : Heat recovery 2 state
10188	HT freq inv : HT line inverter frequency
10198	LT freq inv : LT line inverter frequency
10250	HP set : HP valve setpoint
10254	HP valve % : HP valve analog output
10255	FG valve % : Flash gas valve analog output
10256	GC fan % : Gascooler analog output
10339	St5 : Transcritical mode status
10340	St6 : Stand-by mode
10349	S78 : HT line power generated
10354	HT overh : HT line superheating
10355	LT overh : LT line superheating
10356	Liquid level : Liquid level analog input
10357	St10 : LT line power generated
10392	PC freq inv : PC line inverter frequency
10395	AL22 : PC line compressor 1 total number of alarms
10399	AL23 : PC line compressor 2 total number of alarms
10402	AL24 : PC line compressor 3 total number of alarms
10405	AL25 : PC line compressor 4 total number of alarms
12329	AL62 : CO2 low level alarm
12333	AL66 : CO2 level 1 alarm
12334	AL67 : CO2 level 2 alarm
12335	AL68 : CO2 level 3 alarm
12336	AL69 : CO2 level 4 alarm
12337	AL70 : CO2 level 5 alarm
12350	AL83 : Heat exchanger alarm
12433	AL144 : Liquid receiver valve alarm
12438	AL149 : HP valve alarm
10428	St13 : Antinoise status
10433	St15 : PC line power generated
10439	PC suct T : PC line suction temp.probe
10440	PC overh : PC line superheating
10451	PowLim : Power limitation status

Resources are recorded by the controller e saved in RAM memory. Sampling frequency can be set from 1 second or more.

Storage capacity is approximaly 12 hours for 10 tracks / second.

The displayed tracks are downloaded from the controller.

Let the controller record resources. You may view the tracks later on.

Save them locally to be viewed later on using the Offline Graph Viewer tool.

NOTE.

Soft Scope acquires the traces synchronously (simultaneously) while Graph introduces a delay between first and last track recoreded.

13.4.5. Updates

Bios updates are available regularly. A .bin file available in the installation package shall be downloaded on the controller from the main menu window by selecting BIOS download.

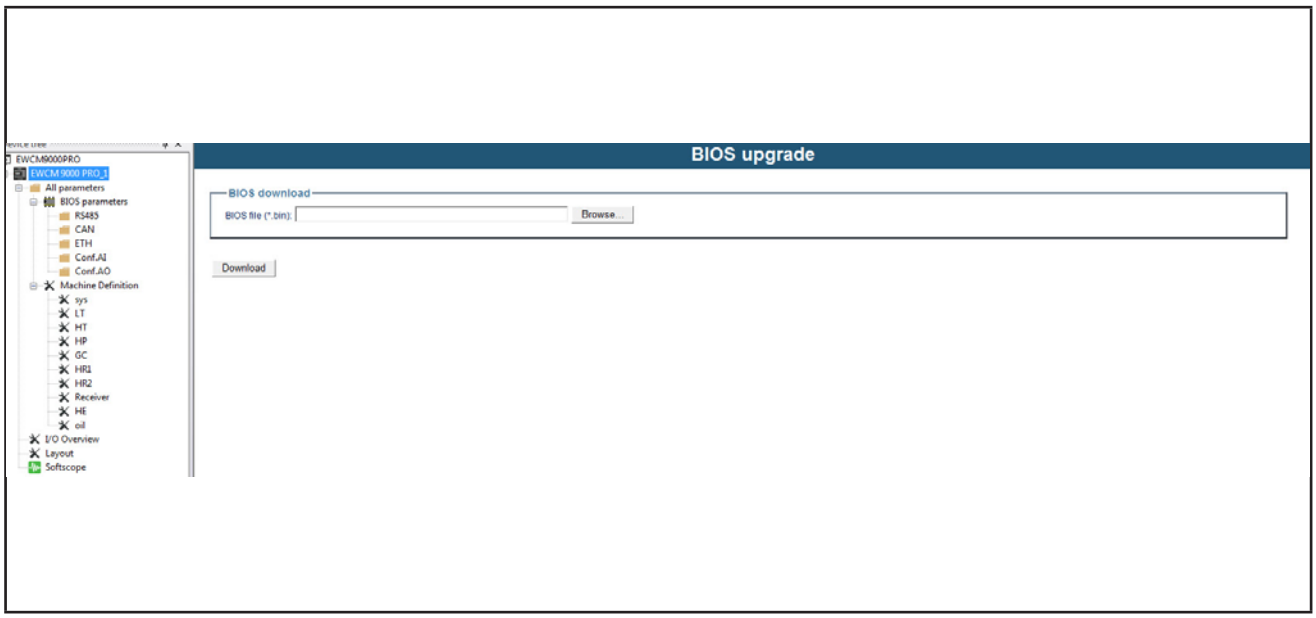

Fig. 107. BIOS download

Other operations can be performed:

- PLC download
- HMI / HMI remote download

Contact you local Eliwell representative for more information on updates.

Eliwell Controls s.r.l.
Via dell'Industria, 15 • Z.I. Paludi
32016 Alpago (BL) ITALY
Telephone +39 0437 986 111
www.eliwell.com

Customer's Technical Support
Telephone +39 0437 986 300
E techsuppeliwell@schneider-electric.com

Sales office
Telephone +39 0437 986 100 (Italy)
+39 (0) 437 986 200 (other countries)
E saleseliwell@schneider-electric.com

9MA10272.01 - EWCM9000 PRO - EN - 09/19
© Eliwell 2017-2019 All rights reserved