EWDR 984

electronic controllers for ventilated refrigeration units

eliwell by Schneider Electric

EN **cod. 9IS43090**
rel. 11/2021

USER INTERFACE

The user interface has a 6 LED display to indicate alarm status and five buttons for controlling instrument status and programming.



BUTTONS

UP		Increase in value of parameter Menu scrolling and activation of defrost function (Parameter programmable H31)
DOWN		Decrease in value of parameter Menu scrolling and activation of associated function (Parameter programmable H32)
set		Access to different levels of menu Alarm display, set point and probes Access to programming of parameters
fnc		Exit current level of menu Confirmation of value of parameter (Parameter programmable H32)
aux		Activation of associated function using parameter H34

LED	Description	Indication
eco	reduced set point inserted LED	Lights up when set point is diplayed, blinking when reduced set point is inserted
eco	LED	'on' with compressor LED on. Blinking for delay, protec–tion or activation blocked
eco	defrost LED	'on' during defrost-ing. Blinking when activated manu-ally or by digital input
eco	fan LED	permanently on when fans are operating
eco	alarm LED	'on' if alarm is present. Blinking for silenced alarm
eco	auxiliary LED	'on' for active output
eco	decimal point	'on' to indicate of voltage when on stand-by and dis play 'off'

SIGNAL LED

The status of the external devices, functions and controllers is described by the device LEDs.

DISPLAY

This is used to display the inputs, the set point, the parameters and related values, alarms, functions and the status of the device.

DESCRIPTION OF MENU

Access to both menus is controlled by the 'set' button. If it is pressed and immediately released, the 'machine status menu' is displayed. Hold the same button down for 5 seconds to access the 'parameter programming menu'.
When one of the two menus has been accessed, you can navigate between the level 1 folders using the 'UP' and 'DOWN' buttons. The folders are opened by pressing the 'set' button once. You can now scroll through the contents of each folder, modify it or use its functions.
You can exit each level of both menus in three ways: using the 'fnc' button, if a new value is confirmed by pressing the 'set' button or, when the time-out has elapsed (15 seconds inactivity on the device).

MACHINE STATUS MENU

The 'machine status menu' contains the folders and basic information on the device:
- AL: alarm folder
- SEt: Set point setting folder
- Pb1: 'probe 1 value' folder
- Pb2: 'probe 2 value' folder
- Pb3: 'probe 3 value' folder If no alarms are present, the "SEt" label is displayed. From here you can scroll down the other menu items using the UP' and 'DOWN' buttons.

Each folder can be accessed by pressing the 'set' button once. Values are modified using the 'UP' and 'DOWN' buttons and the 'set' button that confirms the selected value and takes you back to the higher level.

Setting the set point

Access the 'machine status menu'. If no alarms are present, the "SEt" label is displayed. By pressing and immediately releasing the 'set' button, the set point value can be set using the UP' and 'DOWN' buttons. Press and release the 'set' button again or press the 'fnc' button to go back to the main menu level. The set point setting folder is also closed when the time-out elapses.

Alarm on

If an alarm condition exists when the Machine Status menu is accessed the "ALfolder label appears.

PARAMETER PROGRAMMING MENU

Access the menu by pressing the 'set' button for at least 5 seconds.
The menu structure enables all parameter folders to be divided into two levels. All the level 1 folders can be accessed by entering the password 'PA1'. Scroll down the level 1 folders using the 'UP' and 'DOWN' buttons. Press and release the 'set' button next to the selected label to access the parameters. Scroll through the labels in the folder using the 'UP' and 'DOWN' buttons, press 'set' to display the current value of the selected parameter, use the 'UP' and 'DOWN' buttons and set the required value by pressing 'set'.
To access the level 2 folders in the 'Cnf' folder, select the 'PA2' label, enter the password 'PA2' and confirm with the 'set' button. All the parameters that cannot be changed at level 1 are in this level.
NOTE: Level 1 parameters will only be displayed if you quit the 'parameter programming menu' and repeat the steps for manipulation of level 1 folders.
The steps to follow for manipulation of level 2 parameters are the same as those described for the level 1 structure.

NOTE: It is strongly recommended that the instrument is switched off and on again each time parameter configuration is changed in order to prevent malfunctioning of the configuration and/or ongoing timings.

PASSWORD

The passwords "PA1and "PA2" are used to access level 1 and level 2 parameters. To change them and assign them the desired value, access the 'parameter programming menu' in the "diS" label folder.

The password is requested:
- PA1 when entering the 'parameter programming menu';
- PA2 in the "Cnf" folder containing the level 1 parameters.

USING COPY CARD

The Copy card function can be used to upload and download parameter maps of one or more of the same type of instrument.

The accessory is connected to the device using the special TTL serial port on the instrument. The Copy card can be used for the following functions:

Upload (UL): The upload function reads the instrument parameters and writes them onto the Copy card

Download (dL): The download function writes the parameter map that is on the copy card at that time onto the instrument memory.

NOTE:

Upload = instrument—–> Copy card

Download = Copy card —–> instrument

The operations are performed by accessing the folder with the 'FPr' label and selecting the 'UL', 'dL' or 'Fr' commands.

The operation is confirmed by pressing the 'set' button. If the operation is successful, a "y" is displayed whereas if it is unsuccessful an "n" will be displayed.

Formatting the copy card

This function is necessary when using the copy card for uploading for the first time or when using the copy card on device models that are not compatible.

NOTE: formatting deletes all the data on the Copy card and cannot be undone. Download from reset

Once the copy card has been connected the instrument is switched on. When the lamp test is over, one of the following two labels will be displayed for 5 seconds:

- dLY if the operation is successful
- label DLn if operation fails

The display will then go into default position (probe or set point).

NOTE: after downloading the instrument will begin to work with the new parameter map that has just been downloaded.

ADVANCED FUNCTIONS

DOOR SWITCH INPUT

This is a clean contact digital input with programmable polarity.

The door switch input functions are controlled by the values of the following parameters:

Parameter H11 is used to configure the door switch input with values between -8 and +8. Positive and negative values are present in order to select the polarity assigned to the input and:

Par	Description
dOd	Digital input switches off loads
dAd	D.I. activation delay
OAO	Alarm signal delay after disdisabling the digital input (door closed)
tdO	Time out door open. Time out signal after activation of D.I. (door open)
H11	Digital output configurability/polarity 1
H21...H25	Digital output configurability 1...5

NOTE:

The sign "-" indicates that the input is activated when the contact is closed.

The '+' sign indicates that the input is activated when the contact is open

LIGHT CONTROLLER

Controls the light relay. The function can be started in two different ways. If you press the light button the light relay is switched on if it was off and is switched off if it was on.

The light status is recorded by the device as soon as the button is pressed so that when power is restored after a black-out the device can continue to operate in the same way as before the power failure.

The following parameters control how the light works:

Par	Description
H06	Button/aux input/door switch light active when instrument off
dSd	Enabling light relay by door switch
dLt	Delay Light Relay deactivation delay
OFL	Light switch always disables light relay
OAO	Alarm signal delay after disdisabling the digital input (door closed)
tdO	Time out door open. Time out signal after activation of D.I. (door open)
H11	Digital output configurability/polarity 1
H21...H25	Digital output configurability 1...5

The configuration of these parameters controls the status of the light relay by using the digital input as well as the normal button.

The parameter dSd automatically switches on the light relay when the digital input is enabled and switches it off when the digital input is disabled following the delay set by parameter dLt.

Parameter H06 activates the light button and enables the relay when the door is open even when the instrument is powered but is 'off'.

The dedicated button always deactivates the light relay even if the digital input is on or during the dLt delay only if the parameter OFL=Y.

DIAGNOSTICS

PROBE ALARMS

When one of the probes is outside the nominal operating range or the probe is open or has shorted, an alarm is generated if at least one of these conditions persists for at least 10 seconds.

If at least one of these 3 alarms is signalled the alarm LED and relay are enabled.

Signal	Description
E1	Faulty room probe
E2	Faulty defrost probe
E3	Faulty display probe

When activated code E1 appears on the display.

If several alarms are activated at the same time, they are displayed alternately for 2 seconds each.

An error condition in the room probe leads to:

- E1 code appears on display
- activation of compressor as indicated by Ont and OFt
- deactivation of maximum and minimum alarm controller.

An error condition in the defrost probe leads to:

- E2 code appearing on display
- end of defrost due to a time-out

MINIMUM AND MAXIMUM TEMPERATURE ALARM

The alarm is regulated on the room probe. The temperature limits are defined by parameters HAL and LAL. The limits refer to the set point if parameter Att=1 and are absolute if Att=0.

Att=0 absolute	**Maximum temperature alarm room probe temperature ≥ HAL**
	Minimum temperature alarm room probe temperature ≤ LAL
Att=1 relative	**Maximum temperature alarm room probe temperature ≥ Set + HAL**
	Minimum temperature alarm room probe temperature ≤ Set + LAL

NOTE: If the alarms are relative, the parameter HA1 is set to positive values and LA1 to negative values.

ALARM WITH THRESHOLD REFERRING TO PROBE 3

An alarm is associated with probe 3 that refers to a threshold that is reset at a specified differential.

By setting parameter PbA=3 probe 3 will signal a high or low temperature alarm for exceeding the set value.

Signal	Description
AH3	High temperature alarm
AL3	Low temperature alarm

The alarm is handled in the same way as the other temperature alarms and standard signal delays are used.

DEFROST ALARM
If defrosting does not reach the end of cycle temperature but is terminated by a time out, the alarm controller is immediately activated.
An alarm LED remains on and the alarm is recorded in the Ad2 label alarm menu.

Signal	Description
Ad2	End of defrost due to time out

The alram is automatically reset as soon as the next defrost cycle starts. The alarm LED can only be manually switched off with a silencing procedure.

EXTERNAL ALARM
It is set if the digital input is enabled with the delay specified by parameter dAd and remains enabled until the next time the digital input is deactivated.
The alarm consists of an alarm LED that remains on, activation of a buzzer and deactivation of all the device loads (if specified by the EAL parameter).
If an external alarm is present the EA label is displayed in the AL folder.

Signal	Description
EA	External alarm

It is reset the next time the digital input is deactivated and the buzzer can be manually silenced.

OPEN DOOR ALARM
This alarm is generated when the door is open for longer than the value specified in parameter tdO.
The door open alarm is signalled in the alarm folder (AL) and the LED and alarm relay are switched on. The OPd label is also displayed.

Signal	Description
OPd	Open door alarm

The relay can be deactivated by pressing the silencing button. The LED continues to flash intermittently and the OPd label remains in the alarm menu until the door is closed.

MECHANICAL ASSEMBLY

The EWDR 984 is designed to be wall-mounted (removable brackets) or mounted on DIN rail (Omega 3). The unit operates correctly with an ambient temperature range of between -5 and 55 °C. Units must not be installed in excessively humid and/or dirty locations.

TECHNICAL DATA

Casing: plastic 4 Din modules
Dimensions: front 70x85 mm, depth 61mm.
Mounting: on DIN rail (Omega 3) or wall-mounted.
Connections: on screw terminal block for ≤ 2.5mm^2 conductors
(only one conductor per terminal block for power connections)
Operating temperature: -5...55°C.
Storage temperature: -30...85°C.
Operating and storage ambient humidity: 10...90 % RH (non-condensing).
Display: 3 digits + sign
Analogue inputs: 3 NTC/PTC inputs (parameter configurable)
Digital inputs: 2 voltage-free parameter-configurable digital inputs.
Serial: TTL for Copy Card

Digital outputs: 3 on relay:

8A 1/2 hp 250V SPST; 8A 1/2 hp 250V SPDT; 16A 1hp 250V SPST;

12V⎓/24mA configurable output
Resolution: 1 or 0.1°C.
Accuracy: better than 0.5% of bottom scale +1 digit
Consumption: 5VA
Power supply: 230V~

ELECTRICAL CONNECTIONS

Warning! Always switch off machine before working on electrical connections.
The instrument has screw terminal blocks for connecting cables with a maximum diameter of 2.5 mm^2 (only one conductor per terminal block for power connections): for terminal capacity, see the label on the instrument.
The relay outputs are voltage free. Do not exceed the maximum current allowed. For higher loads, use a suitable contactor. Make sure that the power voltage complies with the device voltage.
Probes have no connection polarity and can be extended using an ordinary bipolar cable (note that if probes are extended this affects the electromagnetic compatibility (EMC) of the instrument: special care must be used when wiring). The TTL serial cable must be kept separate from the power cables.

CONDITIONS OF USE

PERMITTED USE
For safety reasons the instrument must be installed and used in accordance with the instructions supplied. Users must not be able to access parts with dangerous voltage levels under normal operating conditions.
The device must be suitably protected from water and dust depending on the specific application and only be accessible using special tools (except for the front keypad).
The device is ideally suited for household use and/or similar use in the refrigeration sector and has been tested with regard to safety in accordance with the European harmonized reference standards. It is classified as follows:
• as an automatic electronic control device to be independently mounted as regards its construction;
• as a 1 B type operated control device as regards its automatic operating features;
• as a Class A device as regards the category and structure of the software.
UNPERMITTED USE
The use of the unit for applications other than those described above is forbidden. It should be noted that the relay contacts supplied with the device are functional and therefore exposed to potential faults. Any protection devices required to comply with product requirements or dictated by common sense due to obvious safety reasons should be installed externally.

RESPONSIBILITY AND RESIDUAL RISKS

Eliwell shall not be liable for any damages deriving from:

- installation/use other than that prescribed and, in particular, which does not comply with the safety standards specified in the regulations and/or those given herein;

- use on boards which do not guarantee proper protection against electric shock, water or dust when assembled;

- use on boards which allow dangerous parts to be accessed without the use of tools;

- tampering with and/or alteration of the product;

- installation/use on boards that do not comply with the standards and regulations in force.

	PAR.	DESCRIPTION	RANGE	DEFAULT	VALUE	LEVEL	U.M.
	SEt	Set point with range falling between the minimum LSE set point and the maximum HSE set point. The value of the set point is in the *machine status menu*	LSE...HSE	0.0			°C/°F
Compressor controller-CP label	diF	When the compressor stops when it reaches the set point value, it restarts at a value corresponding to the set point plus the value of the differential. It must not be 0	0.1...30.0	2.0		1-2	°C/°F
	HSE	Maximum set point value	LSE...302	50.0		1-2	°C/°F
	LSE	Minimum set point value	-58.0...HSE	-50.0		1-2	°C/°F
	OSP	Offset point. Value to be added to set point if reduced set point is activated (Economy function).	-30.0...30.0	0		2	°C/°F
	Cit	Minimum compressor ON time. Minimum time for activating a compressor before deactivation Not active if=0	0...250	0		2	min
	CAt	Maximum compressor ON time. Maximum time for activating a compressor before deactivation Not active if=0	0...250	0		2	min
	Ont (1)	Compressor activation time if probe is faulty. If set to 1 with OFt=0 the compressor always remains on whereas if OFt>0 it operates in duty cycle mode (see **Duty Cycle** diagram)	0...250	0		1-2	min
	OFt (1)	Compressor shut-down time if probe is faulty. If set to 1 with Ont=0 the compressor always remains off whereas if OFt>0 it operates in duty cycle mode (see **Duty Cycle** diagram)	0...250	1		1-2	min
	dOn	Delay in activating compressor relay after start-up	0...250	0		1-2	sec
	dOF	Delay after shut-down; between compressor relay shut-down and subsequent start-up the specified time must elapse.	0...250	0		1-2	min
	dbi	Delay between switch-ons; the specified time must elapse between two subsequent switch-ons	0...250	0		1-2	min
	OdO	Delay in activating outputs after start-up of instrument or after a power failure. Not active if=0	0...250	0		1-2	min
Defrosting controller-dEF label	dty	Type of defrost. 0 = electrical defrosting 1 = cycle reversing defrosting (hot gas) 2=Free mode: defrost relay and compressor relay released	0/1/2	0		1-2	num
	dit	Period of time elapsing between the start of two defrosts 0=function disabled	0...250	6h		1-2	hours/min/s
	dt1	Unit of measurement for defrost times (par. dit) 0="dit" expressed in hours 1="dit" expressed in minutes 2="dit" expressed in seconds	0/1/2	0		2	num
	dt2	Unit of measurement for duration of defrosting (dEt parameter) 0= "dEt" parameter expressed in hours 1= "dEt" parameter expressed in minutes 2= "dEt" parameter expressed in seconds	0/1/2	1		2	num
	dCt	Selection of defrosting time count mode. 0=compressor operating hours DIGIFROST® method). Defrosting active only if compressor is on. 1 = device operating hours defrost counting is always active when the machine is on 2=compressor stop. Each time the compressor stops a defrosting cycle defrost cycle is performed according to par. dtY 3=disabled	0/1/2/3	1		1-2	num
	dOH	Delay between start of first defrosting operation and start-up of instrument.	0...59	0		1-2	min
	dEt	Defrosting time-out; determines maximum duration of defrosting.	1...250	30		1-2	min
	dE2	Defrosting time-out on second evaporator; determines maximum duration of defrosting on 2nd evaporator	1...250	30		2	min

NOTE: At level 1 the folders will only display all the level 1 parameters. At level 2 the folders will only display all the level 2 parameters. The symbol 1-2 indicates the parameters that are displayed at both menu levels

	PAR.	DESCRIPTION	RANGE	DEFAULT	VALUE*	LEVEL**	U.M.
Defrosting controller-dEF label	dSt	End of defrost temperature (determined by evaporator probe)	-50.0...150	8.0		1-2	°C/°F
	dS2	End of defrost temperature (determined from probe on 2nd evaporator)	-50.0...150	8.0		2	°C/°F
	dPO	Determines when instrument starts up if the defrosting cycle must be activated (if the temperature on the evaporator allows this) y=defrosting activated at start-up n=defrosting not activated at start-up	n/y	n		1-2	flag
	tcd	minimum time for each compressor state before defrosting "Ontime if >0; "Offtime if >0	-31...31	0		2	min
	Cod	Compressor "Off" time before defrost cycle. The compressor is not turned on if a defrost cycle is expected in the time indicated by the parameter. 0=Function excluded	0...60	0		2	min
Fan controller-FAn label (3)	FPt	Determines if "FSt" and "Fot" are expressed as absolute values or in relation to set point 0=absolute value; 1=value related to set point	0/1	0		2	flag
	FSt	Fan stop temperature. Temperature limit that, if exceeded by the value read by the evaporator probe, stops the fans.	-50.0...150	2.0		1-2	°C/°F
	Fot	Fan start temperature. If the temperature read by the evaporator probe is lower than the set value the fans remain off.	-50.0...150	-50.0		2	°C/°F
	FAd	Fan activation intervention differential. (see "FSt", "Fot")	1.0...50.0	2.0		1-2	°C/°F
	Fdt	Delay before fan activation after defrosting	0...250	0		1-2	min
	dt	Dripping time	0...250	0		1-2	min
	dFd	Disables evaporator fans. y=fans disabled n=fans enabled	y/n	y		1-2	flag
	FCO	Disables fans with compressor off (Off) y= fans active (with thermostat; in response to value read by defrost probe, see "FSt" parameter); n= fans off; dc = duty cycle (using parameters "Fon" and "FoF")	n/y/dc	y		1-2	num
	Fod	Enables fan stop with door open and fan re-start when door is closed (if fans were on). n=fans stop; y=fans unchanged	n/y	n		2	flag
	FdC	Fan shut-down delay after compressor stop 0=function excluded	0...99	0		2	min
	Fon	Fan start-up time in Duty Cycle mode; valid for FCO=dc and H42=1 (presence of probe 2)	0...99	0		2	min
	FoF	Fan shut-down time in Duty Cycle mode; valid for FCO=dc and H42=1 (presence of probe 2)	0...99	0		2	min
Alarms-AL label	Att	Determines if "LAL" and "HAL" are expressed as absolute values or as a differential related to the set point 0=absolute value 1=value related to set point	0/1	0		2	flag
	AFd	Alarm differential	1.0...50.0	2.0		1-2	°C/°F
	HAL (2)	Maximum alarm. Temperature limit (whose absolute or relative value status is regulated by "Att") above which the alarm is activated.	LAL...150.0	50.0		1-2	°C/°F
	LAL (2)	Minimum alarm. Temperature limit (whose absolute or relative value status is regulated by "Att") below which the alarm is activated.	-50.0...HAL	-50.0		1-2	°C/°F
	PAO (3)	Alarm exclusion time after start-up of instrument following a power failure	0...10	0		1-2	hours
	dAO	Alarm exclusion time after defrosting	0...999	0		1-2	min

NOTE: At level 1 the folders will only display all the level 1 parameters. At level 2 the folders will only display all the level 2 parameters. The symbol 1-2 indicates the parameters that are displayed at both menu levels

	PAR.	DESCRIPTION	RANGE	DEFAULT	VALUE*	LEVEL**	U.M.
Alarms-AL label	OAO	High and low temperature alarm delay after disabling digital input (door closed)	0...10	0		2	hours
	tdO	Time out after alarm signal when digital input is disabled (door open)	0...250	0		2	min
	tAO (3)	Temperature alarm delay time	0...250	0		1-2	min
	dAt	Alarm for defrosting ended due to time out. n=alarm not active y=alarm active	n/y	n		2	flag
	EAL	External alarm to lock controllers n=does not lock, y=locks	n/y	n		2	flag
	AOP	Polarity of alarm output: 0 = alarm active and output disabled; 1 = alarm active and output enabled	0/1	1		2	flag
	PbA	Configuration of temperature alarm on probe 1 and/or 3: 0=on probe 1 (thermostat control) 1=on probe 3 (display) 2=on probe 1 and 3 (thermostat control and display) 3=on probe 1 and 3 (thermostat control and display) on external threshold	0/1/2/3	0		2	num
	SA3	Probe 3 alarm set point	-50.0...150	50		2	°C/°F
	dA3	Probe 3 alarm differential	-30.0...30.0	2.0		2	°C/°F
Light & digital inputs Lit Label	dSd	Light relay enable from door switch. n = door open, light does not turn on; y = door open, light turns on (if it was off)	n/y	y		2	flag
	dLt	Light relay disabling delay after closing door if “dSd”=y	0...31	0		2	min
	OFL	Light relay disabled even if disabling delay “dLt” is active	n/y	n		2	flag
	dOd	Digital input switches off loads	n/y	n		2	flag
	dAd	Delay in activating digital input	0...255	0		2	min
Display - diS label	LOC	Keyboard locked. Parameters can still be programmed. n= keyboard not locked y= keyboard locked	n/y	n		1	flag
	PA1	Contains the password for level 1 parameters. Enabled if not 0	0...250	0		1	num
	PA2	Contains the password for level 2 parameters. Enabled if not 0	0...250	0		2	num
	ndt	Display with decimal point. n= without decimal point (only whole numbers) y= with decimal point	n/y	n		1-2	flag
	CA1	Temperature value to be added to that read by probe 1 as specified by parameter CAI	-12.0...12.0	0		1-2	°C/°F
	CA2	Temperature value to be added to that read by probe 2 as specified by parameter CAI	-12.0...12.0	0		1-2	°C/°F
	CA3	Temperature value to be added to that read by probe 3 as specified by parameter CAI	-12.0...12.0	0		1-2	°C/°F
	CAI	Intervention of offset on display, thermostat control or both: 0 = only modifies the temperature displayed 1 = adds to the temperature used by controllers not the temperature displayed that remains unchanged. 2= adds to temperature displayed that is also used by controllers.	0/1/2	2		2	num

NOTE: At level 1 the folders will only display all the level 1 parameters. At level 2 the folders will only display all the level 2 parameters. The symbol 1-2 indicates the parameters that are displayed at both menu levels

	PAR.	DESCRIPTION	RANGE	DEFAULT	VALUE*	LEVEL**	U.M.
Display - diS label	LdL	Minimum value that can be displayed	-55.0..140	-50.0		2	°C/°F
	HdL	Maximum value that can be displayed	-50.0...302	140.0		2	°C/°F
	ddL	display during defrosting: 0= displays temperature read by thermostat control probe 1= displays temperature read entering defrost cycle until set point is reached 2= displays “dEF” label during defrosting until set point is reached (or when Ldd expires)	0/1/2	1		1-2	num
	Ldd	Time out for unlocking display (with ddL=2) if defrosting lasts too long	0...255	0		1-2	min
	dro (4)	Select °C or °F to display temperature: 0= °C 1= °F	0/1	0		1-2	flag
	ddd	Value to be displayed: 0 = Set point 1 = probe 1 (thermostat control) 2 = disabled 3 = probe 3 (display)	0/1/2/3	1		2	num
Configuration- CnF label	H00	Selects probe, PTC or NTC 0= PTC 1= NTC	0/1	1		1-2	flag
	H02	Quick activation time for functions with configured buttons. Not possible for aux (time expected = 1 second)	0...15	5		2	sec
	H06	Button/input aux/door switch light active when instrument is off	n/y	y		2	flag
	H08	Stand-by operating mode 0= only display switched off; 1= display on and controls locked; 2= display off and controls locked	0/1/2	2		2	num
	H11 (5)	Configuration of digital inputs/polarity: 0= disabled 1 = defrost 2 = reduced set point 3 = auxiliary 4 = door switch 5= external alarm 6= disabled 7= stand-by (On/Off) 8= maintenance request	-8...8	4		2	num
	H12 (5)	Configuration of digital inputs/polarity Same as H11	-8...8	0		2	num
	H21	Digital output configurability (C): 0= disabled 1= compressor 2= defrosting 3 = fans 4 = alarm 5= auxiliary 6= stand-by 7= light 8= buzzer 9 = defrosting on 2nd evaporator	0...9	1		2	num
	H22	Digital output configurability (B):	0...9	2		2	num
	H24	Digital output configurability (A)	0...9	3		2	num
	H25	Digital output configurability (E):	0...9	4		2	num
	H31	UP button configurability 0=disabled 1=defrosting 2=auxiliary 3=reduced set point 4=disabled 5=disabled 6=light 7=stand-by 8= maintenance request	0...8	1		2	num
	H32	DOWN button configurability Same as H31(0=disabled default)	0...8	0		2	num
	H33	ESC button configurability Same as H31(0=disabled default)	0...8	0		2	num

NOTE: At level 1 the folders will only display all the level 1 parameters. At level 2 the folders will only display all the level 2 parameters. The symbol 1-2 indicates the parameters that are displayed at both menu levels

	PAR.	DESCRIPTION	RANGE	DEFAULT	VALUE*	LEVEL**	U.M.
Configuration- CnF label	H34	AUX button configurability Same as H31(0=disabled default)	0...8	0		1-2	num
	H41	Presence of control probe: n= not present y= present	n/y	y		2	flag
	H42	Presence of evaporator probe: n= not present y= present	n/y	n		2	flag
	H43	Presence of display probe: n= not present y= present 2EP= present (probe on 2nd evaporator)	n/y/2EP	n		2	num
	H45	Start of defrosting for dual evaporator: 0= defrost activated if temperature of 1st evaporator<dSt 1= defrosting activated if at least one of the conditions is met: -temperature 1st evaporator<dSt -temperature 2nd evaporator<dS2 2= defrosting activated if both conditions are met: -temperature 1st evaporator<dSt -temperature 2nd evaporator<dS2	0/1/2	1		2	num
	PA2	**in the CnF folder when you enter the correct password you can access level 2 parameters from label PA2 by pressing the "set" button**					
	rEL	Device version. Read only parameter	/	/		1	/
	tAb	Parameter table; Reserved; Read only parameter	/	/		1	/
Copy Card Fpr label	UL	Transfer of parameter map from instrument to Copy Card	/	/		1	/
	dL	Transfer of parameter map from Copy Card to instrument	/	/		1	/
	Fr (6)	Formatting. Cancels all data in the Copy Card	/	/		1	/

NOTES:
(1) See Duty Cycle diagram
(2) If relative values are present (par. Att=1) parameter HAL is set to positive values and the parameter LAL is set to negative values (-LAL)
(3) Refers exclusively to high and low temperature alarms
(4) when changing from °C to °F or vice versa the set points, differentials, etc. are NOT converted (for example, "set=10 °C becomes set=10°F")
(5) CAUTION: positive or negative values change polarity, Positive values: active input when contact is closed; Negative values: active input when contact is open.
(6) If the Fpr parameter is used, the data previously stored on the Copy Card will be permanently lost.
This operation cannot be undone

* Value: to be compiled manually by user with any custom settings (if different from default settings)
** Level: indicates the visibility level of parameters accessed using a password (see relevant paragraph)

The technical characteristics in this document concerning measurements (range, accuracy, resolution, etc.) refer to the instrument in the strictest sense and not to any accessories provided such as probes, for example. This means that an error introduced by the probe is added to any error that is in the instrument.

DUTY CYCLE MENU

Ont, OFt parameters programmed for Duty Cycle

Ont	OFt	Compressor output
0	0	OFF
0	>0	OFF
>0	0	ON
>0	>0	dc

The error condition for probe 1 (compressor) causes the following:
- E1 code appears on display
- the controller is activated as indicated by the "Ont" and "OFt" if programmed for Duty Cycle

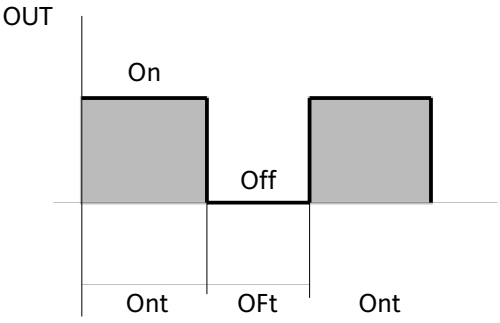

MACHINE STATUS MENU

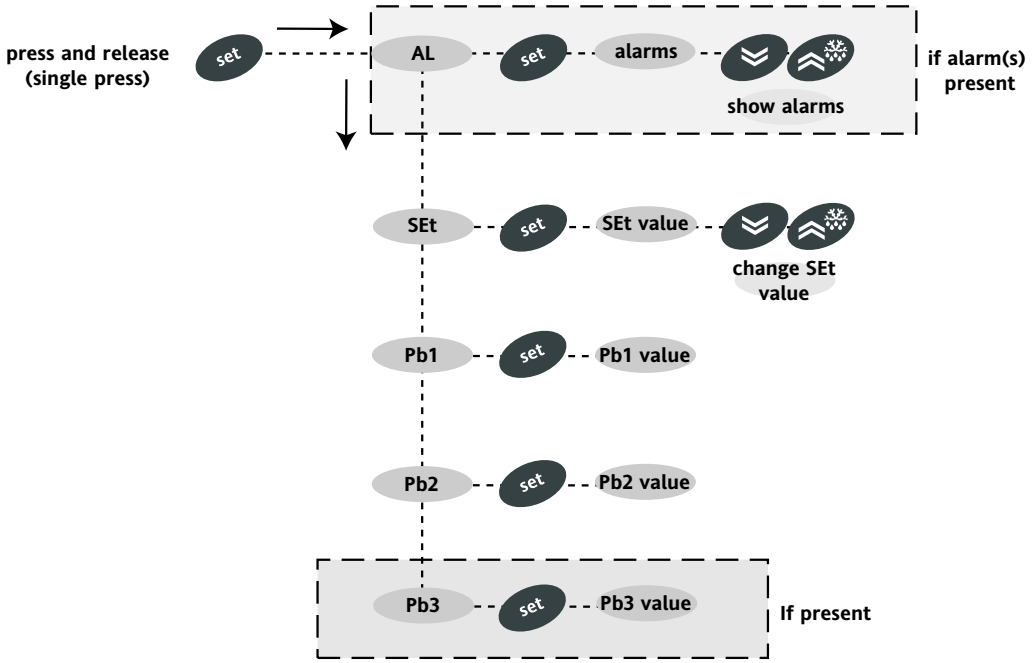

PROGRAMMING MENU

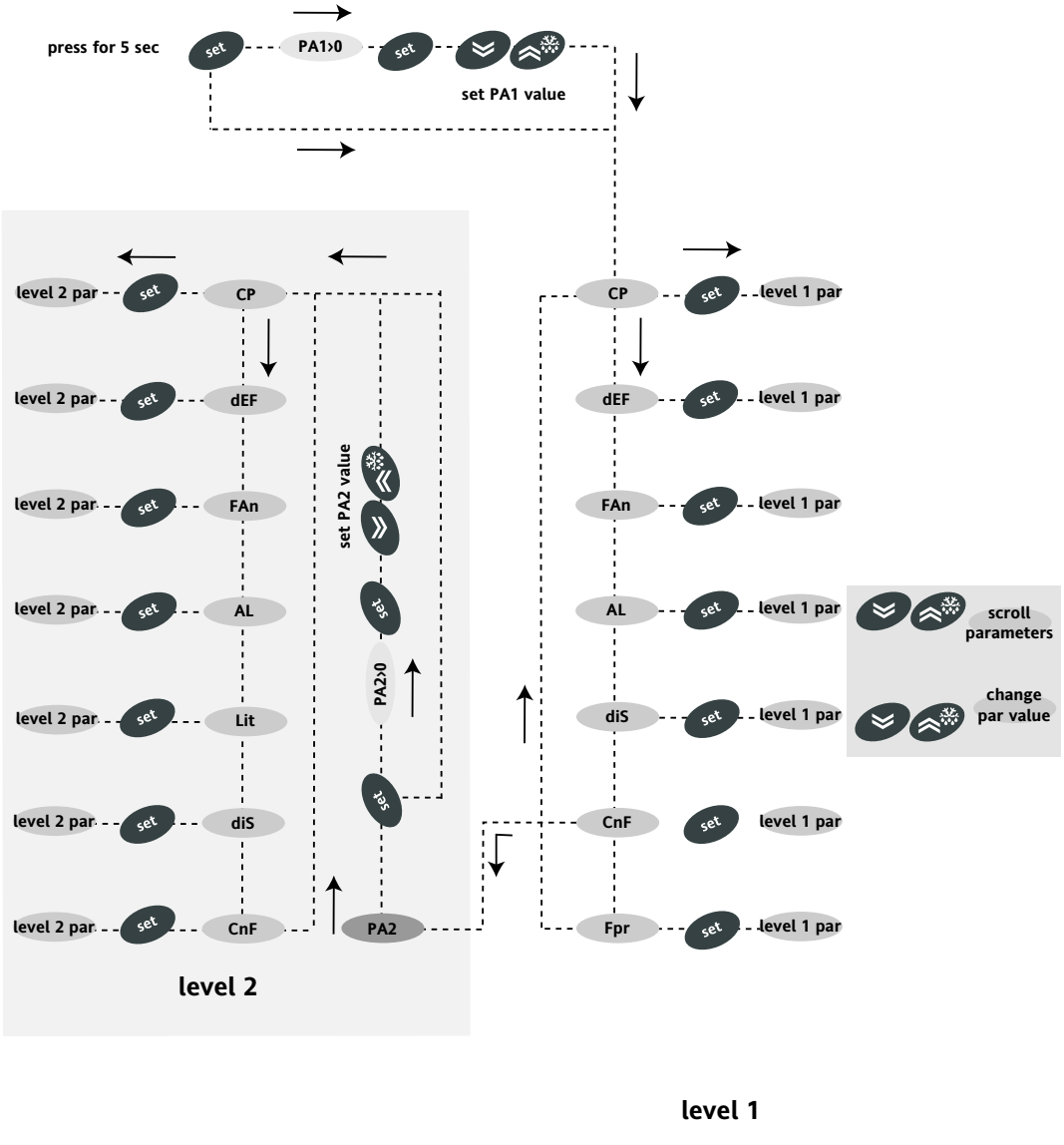

MAX/MIN ALARM DIAGRAM

	Temperature expressed as an absolute value (par "Att0) Abs(olute)	**Temperature expressed in relation to set point (par "Att"=0) reL(ative)**
	❶ 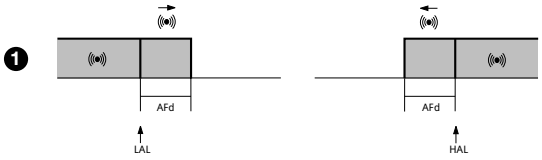	❷ 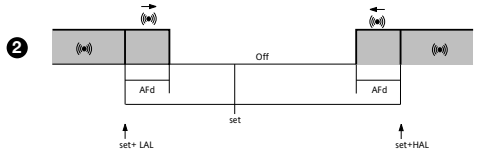
Minimum temperature alarm	Temperature lower than or equal to LAL (LAL with sign)	Temperature lower than or equal to set point+LAL (set-|LAL|) (LAL only negative)
Maximum temperature alarm	Temperature higher than or equal to HAL (HAL with sign)	Temperature higher than or equal to set point+HAL (HAL only positive)
Minimum temperature alarm back swing	Temperature higher than or equal to LAL+AFd	Temperature higher than or equal to set point + LAL + AFd set point -|LAL|+AFd
Maximum temperature alarm back swing	Temperature lower than or equal to HAL-AFd	Temperature lower than or equal to set point+HAL-AFd
		if Att=reL(ative) LAL must be negative: therefore set point+LAL<set point because set point+(-|LAL|)=set point-|LAL|

WIRING DIAGRAM

TERMINALS

1-2	Probe input 1(room probe)
1-3	Probe input 2 (evaporator probe)
1-4	Probe input 3 (display or 2nd evaporator probe)
5-6	Digital input 1
5-7	Digital input 2
8-9	Auxiliary output 12V⎓/20mA (E) see par. H25 (alarm default)
13-14	Power supply 230V~
A	TTL input for Copy Card
15-16	N.O. relay output (**A**) see par. H24 (fan default)
17-18	N.O. relay output (**B**) see par. H22 (defrost default)
17-19	N.C. relay output (**B**) see par. H22 (defrost default)
20-21-22	N.O. relay output (**C**) see par. H21 (compressor default)

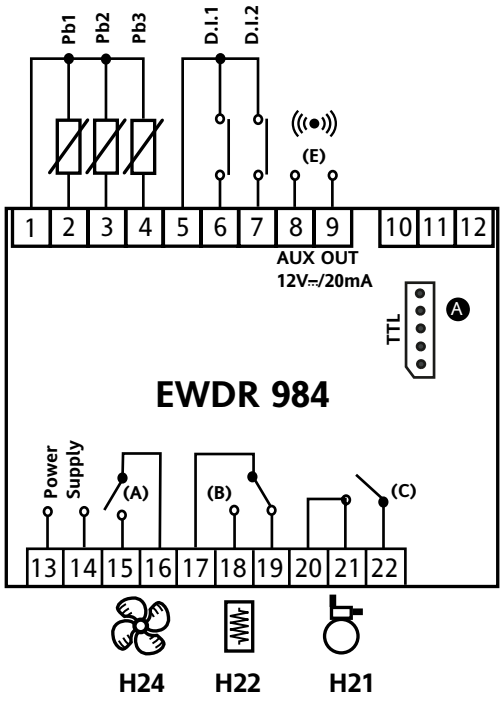

*** Relay characteristics**		
Relay output		
	(C)	15A SPST 1hP 250V~
	(B)	8A SPDT 1/2hP 250V~
	(A)	8A SPST 1/2hP 250V~

ELIWELL CONTROLS s.r.l.
Via dell'Industria, 15 Zona Industriale Paludi
32016 Alpago (BL) ITALY
Telephone +39 0437 986111
Internet https://www.eliwell.com

Technical Customer Support:
Telephone +39 0437 986300
Email: techsuppeliwell@se.com

UK Authorized Representative:
Schneider Electric Limited
Stafford Park 5
Telford, TF3 3BL
United Kingdom

DISCLAIMER

This document is the exclusive property of Eliwell and cannot be reproduced and circulated unless expressly authorized by Eliwell.
Although Eliwell has taken all possible measures to guarantee the accuracy of this document, it declines any responsibility for any damage arising out of its use.
The same applies to any person or company involved in preparing and writing this document.
Eliwell reserves the right to make any changes or improvements without prior notice and at any time.

11/2021 EN
cod. 9IS43090