eliwell
by Schneider Electric

RTX-RTD 600 /V DOMINO

Devices for remote refrigerated cabinets with pulse Electronic Expansion Valve (EEV) management

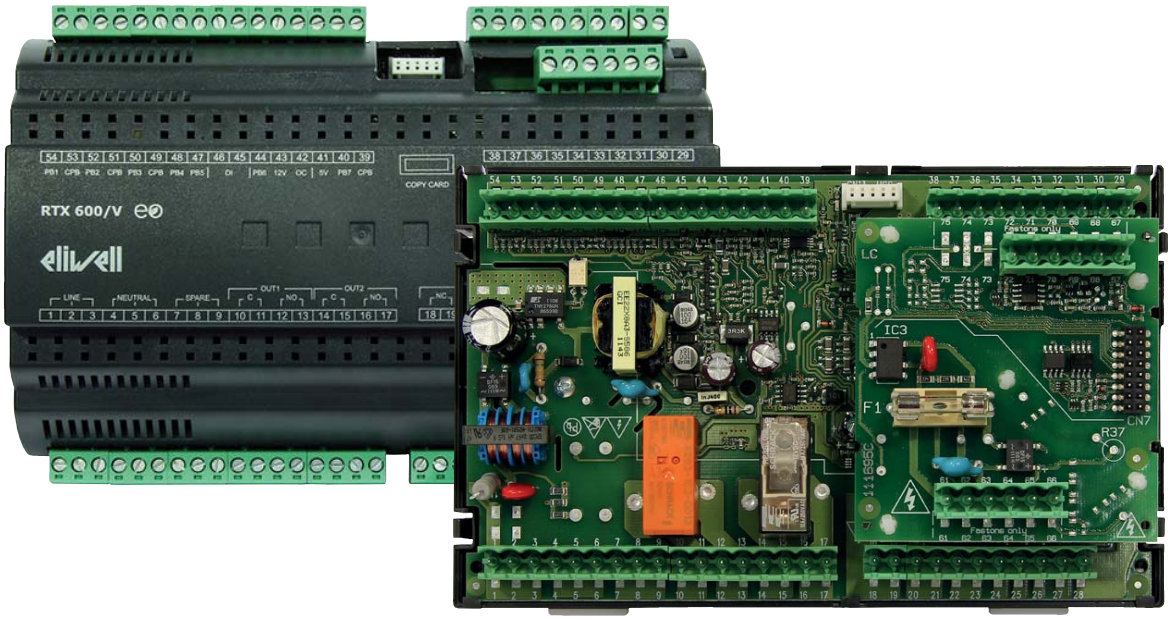

USER MANUAL

9MA10277.03

The information provided in this documentation contains general descriptions and/or technical characteristics of the performance of the products contained herein. This documentation is not intended as a substitute for and is not to be used for determining suitability or reliability of these products for specific user applications. It is the duty of any such user or integrator to perform the appropriate and complete risk analysis, evaluation and testing of the products with respect to the relevant specific application or use thereof.
Neither Schneider Electric nor any of its affiliates orsubsidiaries shall be responsible or liable for misuse of the information contained herein. If you have any suggestions for improvements or amendments or have found errors in this publication, please notify us.

You agree not to reproduce, other than for your own personal, noncommercial use, all or part of this document on any medium whatsoever without permission of Eliwell, given in writing. You also agree not to establish any hypertext links to this document or its content. Eliwell does not grant any right or license for the personal and noncommercial use of the document or its content, except for a non-exclusive license to consult it on an “as is” basis, at your own risk. All other rights are reserved.

All pertinent state, regional, and local safety regulations must be observed when installing and using this product. For reasons of safety and to help ensure compliance with documented system data, only the manufacturer should perform repairs to components.

When devices are used for applications with technical safety requirements, the relevant instructions must be followed. Failure to use Eliwell software or approved software with our hardware products may result in injury, harm, or improper operating results.

Failure to observe this information can result in injury or equipment damage.

© 2018 Eliwell - All rights reserved.

CONTENTS

SAFETY INFORMATION 8

INFORMATION ABOUT THE BOOK 11

CHAPTER 1. INTRODUCTION 12

1.1. DESCRIPTION 12

1.2. RANGE 12

1.3. CONTENTS OF PACK 14

1.4. MAIN CHARACTERISTICS OF THE RTX-RTD 600 /V 14

1.5. MAIN COMPONENTS OF THE RTX-RTD 600 /V 16

CHAPTER 2. MECHANICAL INSTALLATION 17

2.1. BEFORE STARTING 17

2.2. DISCONNECTION FROM THE POWER SUPPLY 17

2.3. COMMENTS CONCERNING PROGRAMMING 18

2.4. OPERATING ENVIRONMENT 18

2.5. COMMENTS CONCERNING INSTALLATION 19

2.6. RTX 600 /V INSTALLATION 20

2.7. RTD 600 /V INSTALLATION 22

2.8. KDEPLUS INSTALLATION 24

2.9. KDWPLUS INSTALLATION 25

2.10. KDT VERTICAL INSTALLATION 26

2.11. KDT HORIZONTAL INSTALLATION 27

2.12. ECPLUS INSTALLATION 28

CHAPTER 3. ELECTRICAL CONNECTIONS 29

3.1. WIRING PRACTICES 29

3.1.1. Wiring guidelines 30

3.1.2. Rules for screw-type terminal boards 31

3.1.3. Protecting the outputs from damage from inductive loads 31

3.1.4. Specific considerations for handling 33

3.1.5. Analogue inputs-probes 34

3.1.6. Serial connections 35

3.2. CONNECTORS 36
3.2.1. Base board connectors 36
3.2.2. Upper board connectors 37
3.3. DEVICE WIRING DIAGRAMS 37
3.3.1. Base board wiring diagram 38
3.3.2. Upper board wiring diagram 40
3.4. PULSE VALVE CONNECTION DIAGRAMS 42
CHAPTER 4. APPLICATIONS 43
4.1. SUMMARY 43
4.2. APPLICATIONS AP1 AND AP3...AP8 44
4.3. APPLICATION AP2 45
CHAPTER 5. TECHNICAL DATA 46
5.1. ENVIRONMENTAL AND ELECTRICAL CHARACTERISTICS 46
5.2. MECHANICAL CHARACTERISTICS 47
5.3. INPUT CHARACTERISTICS 48
5.4. OUTPUT CHARACTERISTICS 48
5.5. SERIALS 49
5.6. POWER SUPPLY 49
5.7. EEV PULSE POWER SUPPLY 49
CHAPTER 6. User and start-up interface 50
6.1. LED 50
6.2. KDEPLUS KEYS 51
6.3. KDWPLUS KEYS AND ADDITIONAL LEDS 52
6.4. KDT KEYS AND ADDITIONAL LEDS 53
6.5. CONNECTIONS RTX 600 /V WITH KEYBOARD AND DISPLAY 54
6.6. CONNECTIONS RTD 600 /V WITH KEYBOARD AND DISPLAY 55
6.7. PRELIMINARY CONFIGURATIONS 56
6.7.1. Loading default applications 56
6.7.2. Default parameter settings 56
6.7.3. Setpoint: setting and locking the modification 56
6.7.4. Password 57
6.7.5. Viewing probe vales 57
6.7.6. Key-activated functions 57
6.7.7. Machine status menu 58
6.7.8. Programming menu 59

CHAPTER 7. FUNCTIONS 60
7.1. SETTINGS 60
7.1.1. Probe setting and calibration 60
7.1.2. Display settings 61
7.2. FUNCTIONS 62
7.2.1. Upload / Download / Formatting 62
7.2.2. Boot Loader Firmware 64
7.2.3. Keyboard shared on Link² 64
CHAPTER 8. REGULATORS 65
8.1. PULSE ELECTRONIC EXPANSION VALVE (EEV) 65
8.1.1. List of compatible / pilotable valves 66
8.1.2. Valve type 67
8.1.3. Coolant type 68
8.1.4. Local pressure transducer (4..20 mA) 69
8.1.5. Local ratiometric transducer 70
8.1.6. Shared ratiometric transducer (shared via hardware) 71
8.1.7. Sharing the pressure/ratiometric transducer via Link² 71
8.1.8. Backup saturation probe from remote 72
8.1.9. Overheating probe 72
8.1.10. Safety fuse 73
8.1.11. Valve regulation parameters 75
8.1.12. PID overheating regulator and MOP 75
8.1.13. Regulation in the event of a probe error 76
8.2. LINK² NETWORK 77
8.2.1. Supervision gateway 77
8.2.2. Sharing the temperature probe 78
8.2.3. Defrost 79
8.2.4. Shared display 80
8.2.5. Sharing the setpoint value 81
8.2.6. Sharing commands 81
8.3. REGULATION 82
8.3.1. Single Thermostat Regulation 82
8.3.2. Double Thermostat “in series” regulation 83
8.3.3. Double Thermostat “in parallel” regulation 84
8.3.4. Regulation with 2 independent regulators 85
8.3.5. Continuous Modulation Regulation 85

8.3.6. Regulation in the event of a probe error 86
8.3.7. Energy Saving 86
8.3.8. Dynamic setpoint 86
8.3.9. Remote Offset (managed only by the Supervisor) 87
8.4. COMPRESSOR/GENERAL PROTECTIONS 88
8.4.1. Compressor protection timers 89
8.5. DEFROST/DRIPPING 90
8.5.1. Enable defrost 90
8.5.2. Automatic defrosting 91
8.5.3. External defrost 92
8.5.4. Defrost mode 93
8.6. EVAPORATOR FANS 98
8.6.1. Operating conditions 98
8.6.2. Fan operation in thermoregulation mode 100
8.6.3. Fan operation in Duty Cycle mode 101
8.6.4. Fan operation in defrost 102
8.6.5. Fan operation without probe 102
8.6.6. Fan function during dripping 103
8.6.7. Post-ventilation 103
8.7. RTC 104
8.7.1. Weekdays / holidays 104
8.7.2. Defrost with time bands 104
8.7.3. Periodic defrost 104
8.7.4. Events 104
8.8. PREHEATER 105
8.9. ENERGY SAVING 105
8.9.1. Virtual probe/ change probe 105
8.10. DEEP COOLING CYCLE - DCC 106
8.11. AUXILIARY OUTPUT (AUX/LIGHT) 107
8.12. EXTERNAL ALARM/DOOR MANAGEMENT 108
8.13. FRAME HEATERS (FH) 110
8.13.1. Example of connections 110
8.13.2. Fixed duty cycle regulation 111
8.13.3. Proportional temperature regulation 111
8.13.4. Proportional temperature regulation with dewpoint 112
8.14. GENERIC INPUT 113

8.15. STAND-BY 113
8.16. SOFT START REGULATION 114
8.17. CABINET CLEANING FUNCTION 115
CHAPTER 9. PARAMETERS 116
9.1. PARAMETER TABLE 116
CHAPTER 10. ALARM DIAGNOSTICS 131
10.1. ALARMS AND SIGNALS TABLE 131
10.1.1. Cause/Effect table 132
10.2. DESCRIPTION OF ALARMS 134
10.2.1. Probe alarm 134
10.2.2. Max/min temperature alarm 135
10.2.3. End of defrost due to timeout alarm 136
10.2.4. External alarm 137
10.2.5. Door open alarm 138
CHAPTER 11. MODBUS MSK 639 FUNCTIONS AND RESOURCES ... 139
11.1. DATA FORMAT (RTU) 139
11.1.1. Network 139
11.1.2. Modbus commands available and data areas 140
11.1.3. Address configuration 140
11.1.4. Parameter Visibility and Values 140
11.2. MODBUS TABLES 141
11.2.1. Parameters/visibility table 143
11.2.2. Folder visibility table 188
11.2.3. Client Table 189

SAFETY INFORMATION

Important information

Read these instructions carefully and visually inspect the equipment to familiarise yourself with the device before attempting to install it, put it into operation, overhaul or service it.
The following warning messages may appear anywhere in this documentation or on the equipment to warn of potential dangers or to call attention to information that can clarify or simplify a procedure.



The addition of this symbol to a danger warning label indicates the existence of an electrical danger that could result in personal injury should the user fail to follow the instructions.



This is the safety warning symbol.
It is used to warn the user of the potential dangers of personal injury. Observe all the safety warnings accompanied by this symbol to avoid the risk of serious injury or death.

⚠ DANGER

DANGER indicates a dangerous situation that, unless avoided, **will result in** death or cause serious injuries.

⚠ WARNING

WARNING indicates a potentially dangerous situation which, if not avoided, **could result** in death or serious injury.

⚠ CAUTION

CAUTION indicates a dangerous situation which, if not avoided, **could result in** minor or moderate injury.

NOTICE

NOTICE used in reference to procedures not associated with physical injuries.

NOTE

Electrical equipment must be installed, used and repaired by qualified personnel only.
Neither Schneider Electric nor Eliwell accepts responsibility for any consequences resulting from the use of this material. A qualified person is someone who has specific skills and knowledge regarding the structure and the operation of electrical equipment and who has received safety training on how to avoid the inherent dangers.

Permitted use

The device must be installed and used in accordance with the instructions provided. In particular, parts carrying dangerous voltages must not be accessible under normal conditions.
It must be adequately protected from water and dust according to the application, and must be accessible only using a keyed or tooled locking mechanism.
The device is suitable for use in commercial or household refrigeration appliances and/or similar equipment and has been tested in accordance with the harmonized European reference standards.

Prohibited use

Any use other than that expressly permitted is prohibited.

The relay contacts provided are mechanical and subject to failure; any protection devices required by product standards, or suggested by good practice in view of obvious safety requirements, must be installed externally of the device.

Liability and residual risks

The liability of Schneider electric and Eliwell is limited to the correct and professional use of the product according to the directives referred to herein and in the other supporting documents, and does not cover any damage (including but not limited to) the following causes:

- unspecified installation/use and, in particular, in contravention of the safety requirements of the legislation in force in the country of installation and/or specified in this document;
- use on equipment which does not provide adequate protection against electrocution, water and dust in the actual installation conditions;
- use on equipment allowing access to dangerous parts without having to use a keyed or tooled locking mechanism to access the equipment;
- tampering with and/or modification of the product;
- installation/use on equipment that does not comply with the regulations in force in the country of installation.

Disposal



The equipment (or product) must be subjected to separate waste collection in compliance with the local legislation on waste disposal.

Date of production

The date of production is shown on the device label, indicating the week and year of production (WW-YY).

Product related information

⚠ ⚠ DANGER

HAZARD OF ELECTRIC SHOCK, EXPLOSION OR ELECTRIC ARC

- Disconnect all power from all devices including connected devices, prior to removing any covers or doors, or installing or removing any accessories, hardware, cables, or wires.
- Always use a properly rated voltage sensing device to confirm the power is off where and when indicated.
- Replace and secure all covers, accessories, hardware, cables and wires.
- Verify the earthing connections on all earthed devices.
- Use this equipment and all connected products only at the specified voltage.
- Do not connect the device directly to the line voltage, except where indicated otherwise.

Failure to follow these instructions will result in death or serious injury.

This device has been designed to operate outside of any dangerous location, and exclusive of applications that generate, or have the potential to generate, hazardous atmospheres. Only install this device in zones and application known to be free, at all times, of hazardous atmospheres.

⚠ DANGER

POTENTIAL FOR EXPLOSION

- Install and use this device in non-hazardous locations only.
- Do not install and use this equipment in applications capable of generating hazardous atmospheres, such as those applications employing flammable refrigerants.

Failure to follow these instructions will result in death or serious injury.

For information concerning the use of control equipment in applications capable of generating hazardous materials, consult your local, regional or national standards bureau or certification agency.

⚠ WARNING

LOSS OF CONTROL

- The installation designer must consider the potential failure modes of the control circuit and, for some critical control functions, provide a means for reaching a safe condition during and after a circuit failure. Examples of critical control functions are the emergency stop and end of travel stop, power supply cut-off and restarting.
- Separate or redundant control circuits must be provided for critical control functions.
- The system control circuits can include communication connections. Keep in mind the implications of transmission delays or sudden connection failures.
- Comply with all the standards regarding accident protection and the local applicable safety directives.
- Every implementation of this device must be tested individually and completely in order to verify its proper operation before putting it in service.

Failure to follow these instructions can result in death, serious injury, or equipment damage.

INFORMATION ABOUT THE BOOK

Document scope

This document describes **RTX-RTD 600 /V** devices for remote refrigerated cabinets with pulse (EEV) electronic expansion valve, including information on installation and wiring.

Use this document to:
- Install and use your **RTX-RTD 600 /V** device
- Become familiar with the functions of the **RTX-RTD 600 /V** device

NOTE: Read this document and all related documents carefully before installing, operating or maintaining the device.

Note regarding validity

This document is valid for devices **RTX-RTD 600 /V** (MSK 639).
The technical characteristics of the devices described in this manual can also be consulted online on the Eliwell website. The characteristics illustrated in this manual should be identical to those which can be consulted online. In line with our policy of continuous improvement, we may revise the contents to improve clarity and accuracy. If you see any discrepancies between the manual and the information consulted on-line, please use the latter as a reference.

Related documents

Document type	Reference document code	Document title
User Guide	9MA00277 9MAA0277	9MA00277.03 MAN RTX-RTD600V DOMINO IT 9MAA0277.03 MAN RTX-RTD600V DOMINO RU
Instruction Sheet	9IS24553 9IS54553 9IS54554 9IS54555 9IS54556 9IS54557	9IS24553.00 IS RTX600V DOMINO EN_IT 9IS54553.00 IS RTX600V DOMINO FR 9IS54554.00 IS RTX600V DOMINO ES 9IS54555.00 IS RTX600V DOMINO DE 9IS54556.00 IS RTX600V DOMINO RU 9IS54557.00 IS RTX600V DOMINO PL
Instruction Sheet	9IS24558 9IS54558 9IS54559	9IS24558.00 IS RTD600V DOMINO EN_IT 9IS54558.00 IS RTD600V DOMINO FR 9IS54559.00 IS RTD600V DOMINO ES

You can download these technical publications and other technical information from our website at:

www.eliwell.com

CHAPTER 1
INTRODUCTION

1.1. DESCRIPTION

The series of **RTX-RTD 600 /V** devices consists of devices for remote refrigerated cabinets with pulse electronic expansion (EEV) valve.

They are new generation devices with the following main functions:

- Control of evaporator overheating via an integrated driver for pulse (EEV) valves
- 2 ON/OFF regulators for HOT/COLD
- Single & double evaporator defrost (heaters, modulated heaters, inversion cycle, hot gas)
- Evaporator fans
- Anti-condensation heaters (Frame heaters)
- AUX
- Light
- Door microswitch
- ON/OFF
- Deep Cooling
- Dynamic setpoint
- Day/Night
- Diagnostics
- “Easy Map” programming
- Programmable inputs/outputs
- LINK^2 local network
- RS485 Modbus communication protocols
- Compatibility with the Device Manager (DM)
- Compatibility with UNICARD and MFK (Multi Function Key)

In this manual, the photographs and drawings help to demonstrate the **RTX-RTD 600 /V** device (and other Eliwell devices) and are purely illustrative. The relative dimensions and proportions may not correspond to the actual dimensions, nor are actual size or in scale. Moreover, all wiring and electrical diagrams are to be considered as simplified representations which do not correspond to the actual situation.

1.2. RANGE

The **RTX-RTD 600 /V** range includes:

Image	Description
	RTX 600 /V
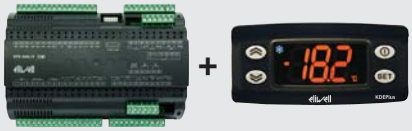	KIT RTX 600 /V + KDEPlus
	RTD 600 /V

Depending on your own applications, the following accessories may be purchased separately:

Image	Description
	KDEPlus
	KDWPlus
	Vertical KDT
	Horizontal KDT
	ECPLUS
	UNICARD USB/TTL
	USB-A/A EXTENSION CABLE
	USB MAINS POWER SUPPLY
	NTC, Pt1000 and PTC
	PRESSURE TRANSDUCER (EWPA)
	RATIOMETRIC TRANSDUCER (EWPA)
	Electronic expansion valves (**EEV**) **pulse** **PXV** (with orifices from 0.5 to 2.7 mm)

NOTE: Contact Eliwell Sales Office for item codes.

1.3. CONTENTS OF PACK

Fig. 1 on page 14 shows the contents of a **RTX-RTD 600 /V** device package with or without Power-Pack.

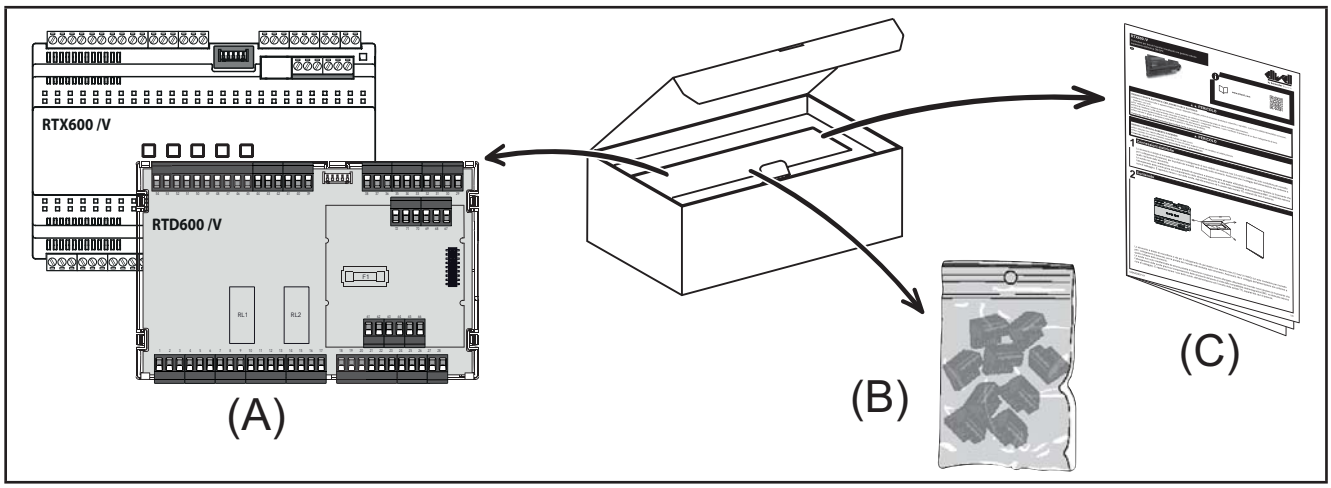

Fig. 1. Contents of pack

The following can be found in the package:

Label	Description
A	**RTX-RTD 600 /V** device
B	Removable screw terminal KIT
C	**RTX-RTD 600 /V** instruction sheet

The KIT versions include a second box containing the **KDEPlus** keyboard.

1.4. MAIN CHARACTERISTICS OF THE RTX-RTD 600 /V

RTX-RTD 600 /V has high performance in terms of connectivity, as well as simple programming, maintenance and technical assistance.

The models are available mounted on a DIN rail to reduce the wiring time.
The 8 DIN format allows maximum flexibility and easy installation.

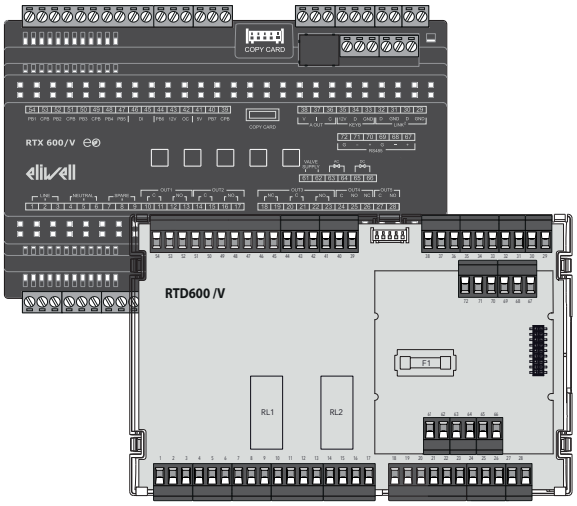

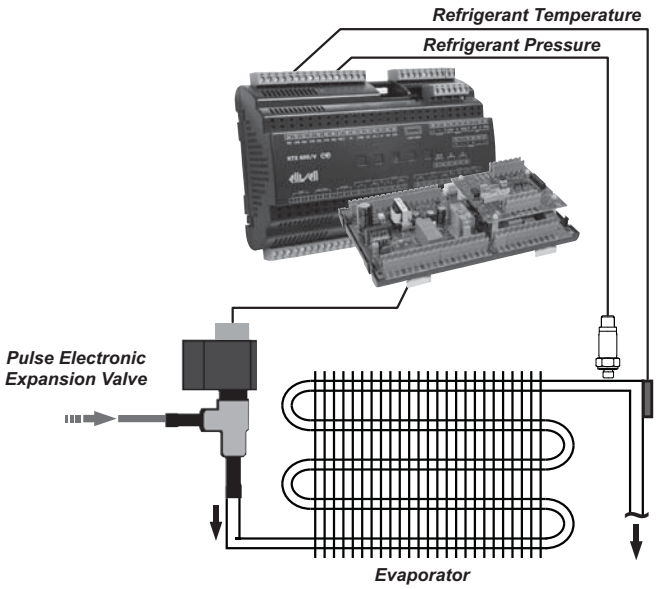

The range of **RTX-RTD 600 /V** devices includes:

- **RTX 600 /V**: consisting of 1 base board and 1 internal upper board
- **RTD 600 /V**: consisting of 1 base board and 1 internal upper board.

NOTE: The differences between The 2 models are as follows:

- Cover (**RTX 600 /V** = present; **RTD 600 /V** = absent)
- OUT2 relay model: - **RTX 600 /V** = 16(5) A;
  - **RTD 600 /V** = 16 A resistive (Suitable for incandescent lamp).

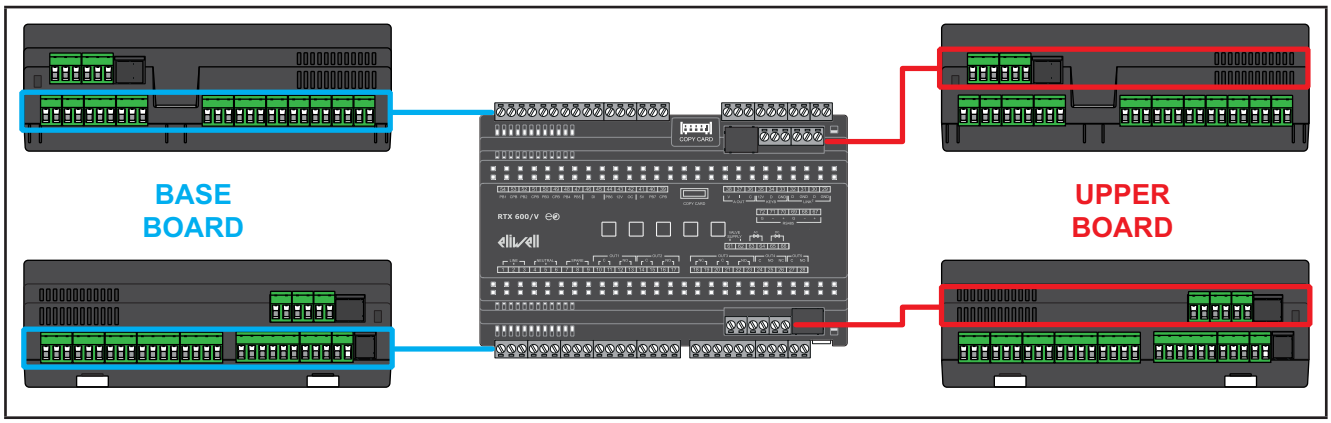

Fig. 2. **RTX 600 /V** : Base board and upper board

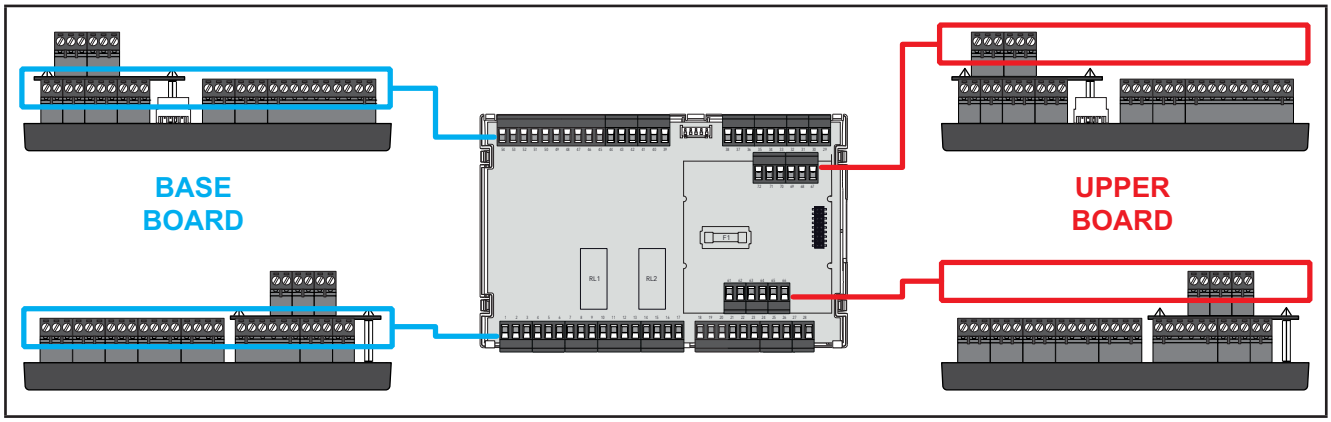

Fig. 3. **RTD 600 /V** : Base board and upper board

The following table shows the main characteristics of the **RTX 600 /V and RTD 600 /V** models.

Feature	RTX 600 /V	RTD 600 /V
Power supply	SMPS 100...240 Vac (±10 %) 50/60 Hz	
Input types	5 configurable NTC / PTC / Pt1000 / DI inputs (Pb1, Pb2, Pb3, Pb4 e Pb5) 1 configurable 4...20 mA / DI input (Pb6) 1 ratiometric / DI configurable input (Pb7) 1 non-powered multipurpose digital input (DI)	
Output type	5 relay digital outputs 1 OC multifunctional output (Open Collector) 1 DAC multifunctional output (0...10 Vdc / 4...20 mA) 1 EEV pulse driver output on SSR relay	
Display	NO	NO
Cover	YES	NO
Communication ports	1 TTL for UNICARD / Device Manager (via DMI) / Multi Function Key connection (maximum lenght 3 m / 9.84 ft.) 1 RS485 opto-isolated serial for supervision 1 serial for connection to local Link2 network 1 serial for connection to keyboard (KDEPlus, KDWPlus, KDT) or display (ECPlus)	

1.5. MAIN COMPONENTS OF THE RTX-RTD 600 /V

The main components of the **RTX-RTD 600 /V** are the following:

NOTE: **Fig. 4 on page 16** shows the **RTX-RTD 600 /V** device with the removable connectors mounted**.**

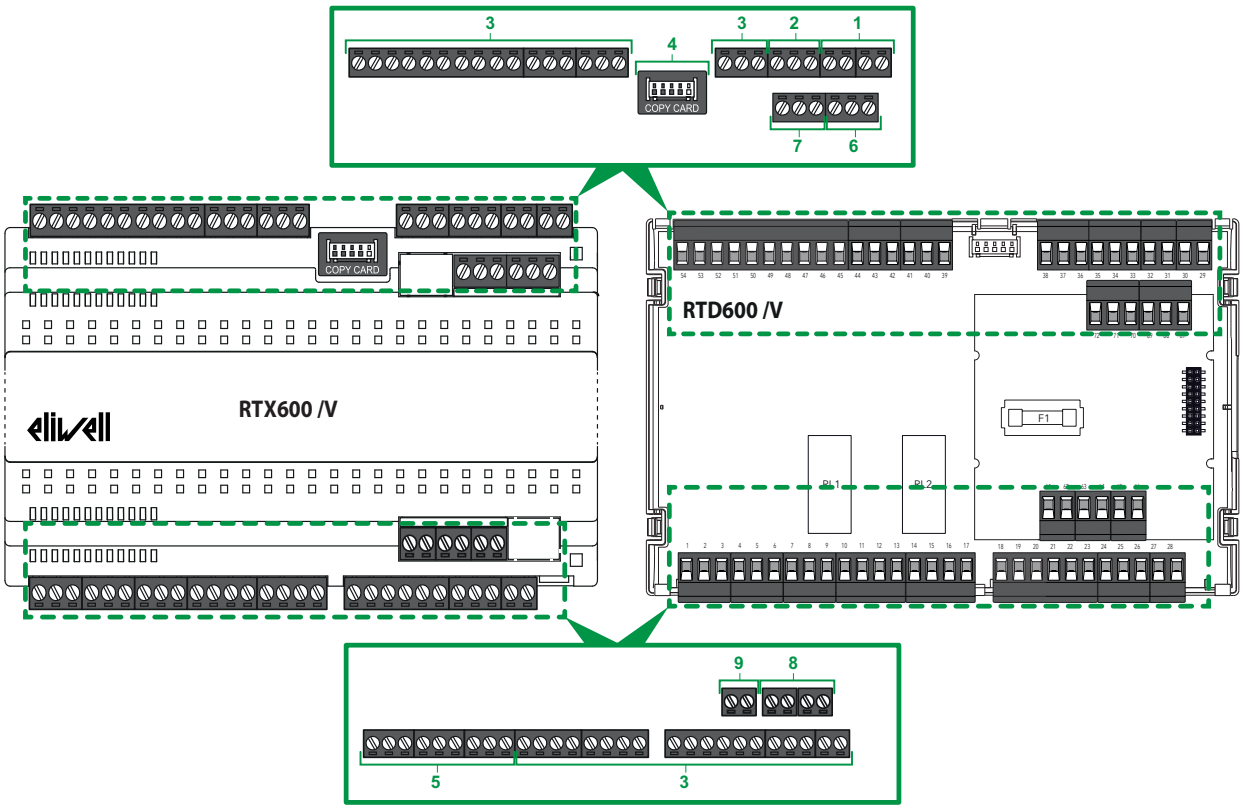

Fig. 4. Main components of the **RTX-RTD 600 /V**

Label	Description	Position	For more information refer to:
1	Link[2]	Base Board	**"3.1.6. Serial connections" on page 35** and **"5.5. Serials" on page 49**
2	Keyboard	Base Board	**"5.5. Serials" on page 49**
3	Doors Input/Output	Base Board	**"3.3.1. Base board wiring diagram" on page 38**
4	TTL port	Base Board	**"5.5. Serials" on page 49**
5	Power supply	Base Board	**"5.6. Power supply" on page 49**
6	RS 485-1 port	Upper Board	**"3.1.6. Serial connections" on page 35** and **"5.5. Serials" on page 49**
7	RS 485-2 port	Upper Board	**"3.1.6. Serial connections" on page 35** and **"5.5. Serials" on page 49**
8	Pulse EEV power supply	Upper Board	**"5.7. EEV PULSE power supply" on page 49**
9	Pulse EEV output	Upper Board	**"3.3.2. Upper board wiring diagram" on page 40**

CHAPTER 2
MECHANICAL INSTALLATION

2.1. BEFORE STARTING

Before starting to install your system, read this chapter carefully.

Only the user, the machine manufacturer or the integrator can be familiar with all the conditions and factors present during installation and set up, preparing, starting-up and servicing the machine the process and therefore only they are able to determine which automation equipment and relative safety devices and interlocks can be used in a correct and efficient manner.

When the automation and control equipment and any other relative equipment or software are selected for a particular application, also the applicable local, regional and national standards and regulations must be taken into consideration.

Caution must be used concerning compliance with all safety information, other electrical requirements or laws which may apply to your machine or process when using this device.

⚠ WARNING

REGULATORY INCOMPATIBILITY

Ensure that all equipment used and the systems designed comply with all applicable local, regional and national laws.

Failure to follow these instructions can result in death, serious injury, or equipment damage.

2.2. DISCONNECTION FROM THE POWER SUPPLY

Assembled and installed all options and modules before installing the control system on an assembly rail, the panel door or other assembly surface. Before disassembling the equipment, remove the control systems from the assembly rail, plate or panel.

⚠ ⚠ DANGER

HAZARD OF ELECTRIC SHOCK, EXPLOSION OR ELECTRIC ARC

- Disconnect all power from all devices including connected devices, prior to removing any covers or doors, or installing or removing any accessories, hardware, cables, or wires.
- Always use a properly rated voltage sensing device to confirm the power is off where and when indicated.
- Replace and secure all covers, accessories, hardware, cables and wires.
- Verify the earthing connections on all earthed devices.
- Use this equipment and all connected products only at the specified voltage.
- Do not connect the device directly to the line voltage, except where indicated otherwise.

Failure to follow these instructions will result in death or serious injury.

2.3. COMMENTS CONCERNING PROGRAMMING

The products described in this manual were designed and tested using Eliwell programming, configuration and maintenance software products.

2.4. OPERATING ENVIRONMENT

This device has been designed to operate outside of any dangerous location, and exclusive of applications that generate, or have the potential to generate, hazardous atmospheres. Only install this device in zones and application known to be free, at all times, of hazardous atmospheres.

⚠ DANGER

POTENTIAL FOR EXPLOSION

- Install and use this device in non-hazardous locations only.
- Do not install and use this equipment in applications capable of generating hazardous atmospheres, such as those applications employing flammable refrigerants.

Failure to follow these instructions will result in death or serious injury.

For information concerning the use of control equipment in applications capable of generating hazardous materials, consult your local, regional or national standards bureau or certification agency.

⚠ WARNING

INCORRECT OPERATION OF THE DEVICE

Install and use the device in compliance with the conditions described in the section “Environmental and electrical characteristics” of the present document.

Failure to follow these instructions can result in death, serious injury, or equipment damage.

2.5. COMMENTS CONCERNING INSTALLATION

RTX-RTD 600 /V device

⚠ WARNING

UNINTENDED EQUIPMENT OPERATION

- Use appropriate safety interlocks where personnel and/or equipment hazards exist.
- Install and operate this equipment in an enclosure appropriately rated for its intended environment and secured by a keyed or tooled locking mechanism.
- Power line and output circuits must be wired and fused in compliance with local and national regulatory requirements for the rated current and voltage of the particular equipment.
- Do not use this equipment in safety-critical machine functions unless the equipment is otherwise designated as functional safety equipment and conforming to applicable regulations and standards.
- Do not disassemble, repair, or modify this equipment.

Failure to follow these instructions can result in death, serious injury, or equipment damage.

For mechanical dimensions, see **“5.2. Mechanical Characteristics” on page 47**.

RTX-RTD 600 /V devices are designed for assembly on DIN rail.

Keyboard (KDEPlus, KDWPlus, KDT) and Display (ECPlus)

The final application must prevent the access to high voltage or moving parts through the hole for the keyboard (**KDEPlus**, **KDWPlus** or **KDT**) or the display (**ECPlus**) mounting given that the keyboard or the display cannot provide protection against this eventuality.

⚠ ⚠ DANGER

HAZARD OF ELECTRIC SHOCK OR ACCESS TO MOVING PARTS

Ensure that the display or keyboard is properly installed during normal operation.

Failure to follow these instructions will result in death or serious injury.

2.6. RTX 600 /V INSTALLATION

The **RTX 600 /V** is designed for installation on a DIN rail.
For installation proceed as follows:

1. Move the two locking clips outwards (lever with a screwdriver in the compartments)
2. Mount the device on the DIN rail
3. Press the clips inwards to lock.

   NOTE: Once assembled on the DIN rail, verify that the clip docking devices are turned downwards.

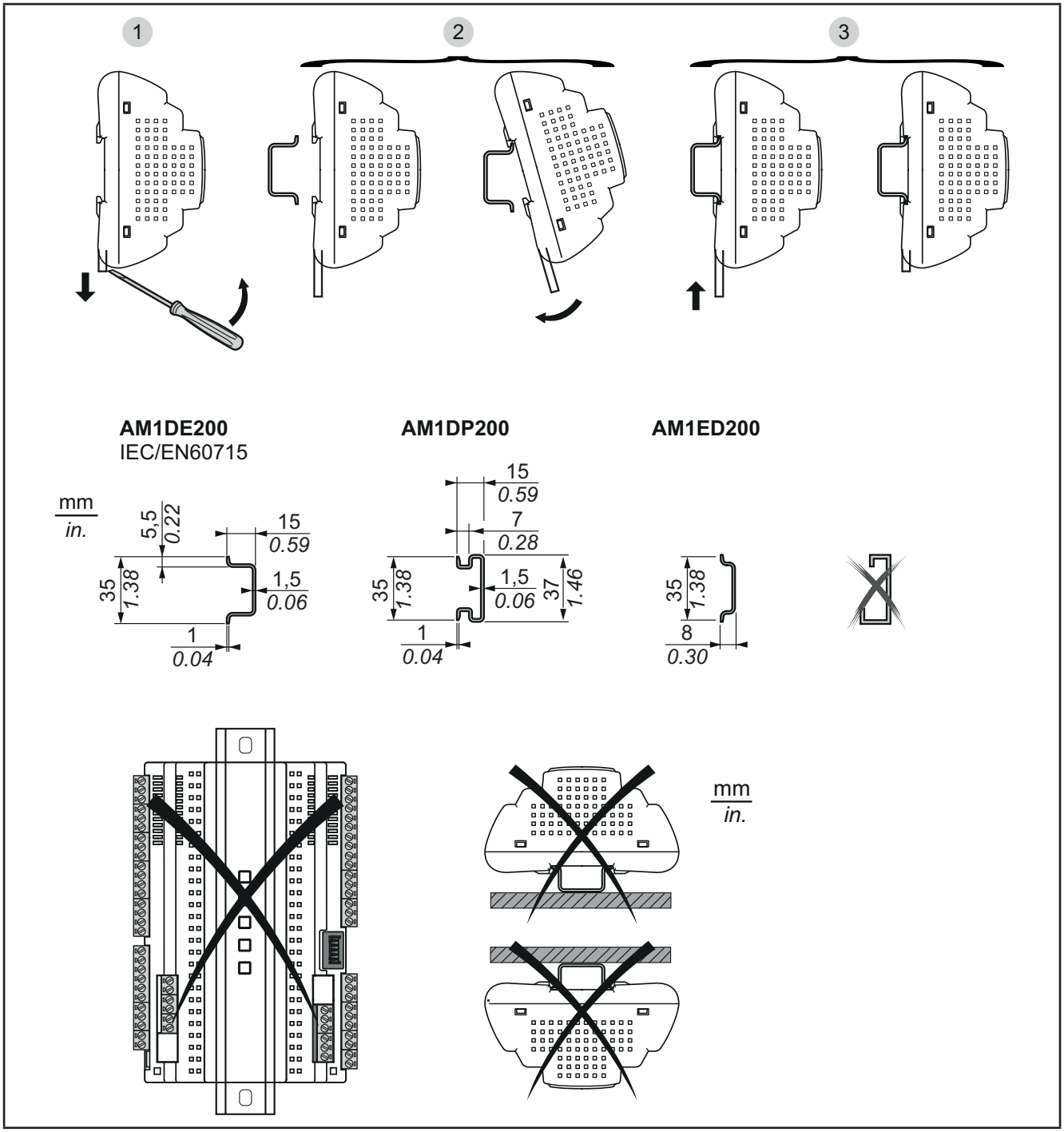

Fig. 5. Installation

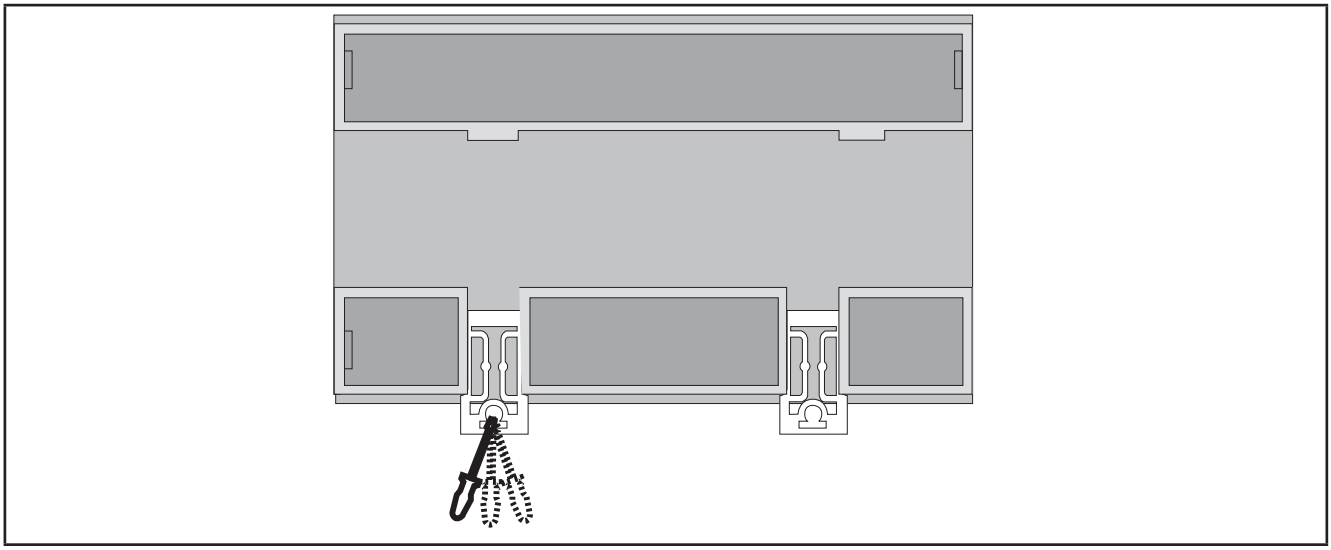

Fig. 6. Detail of sping hooking devices

The **RTX 600 /V** device was designed as a class IP20 product and must only be installed in type-approved cabinets and/or in points that prevent unauthorised access.

When installing the device, comply with a series of distances:

- **RTX 600 /V** and all sides of the cabinet (including the panel door).
- The terminal boards on the **RTX 600 /V** and the wiring cable trays. These distances reduce the electromagnetic interference between the device and the wiring cable trays.
- The **RTX 600 /V** and the other heat-generating devices installed in the same cabinet.

⚠ WARNING

INCORRECT OPERATION OF THE DEVICE

- Place the devices dissipating the most heat in the top of the cabinet and ensure suitable ventilation.
- Do not place these devices near or above any devices which could cause overheating.
- Install the device in a point that guarantees the minimum distances from all structures and adjacent equipment as indicated in this document.
- Install all equipment in conformity with the technical specifications given in the respective documentation.

Failure to follow these instructions can result in death, serious injury, or equipment damage.

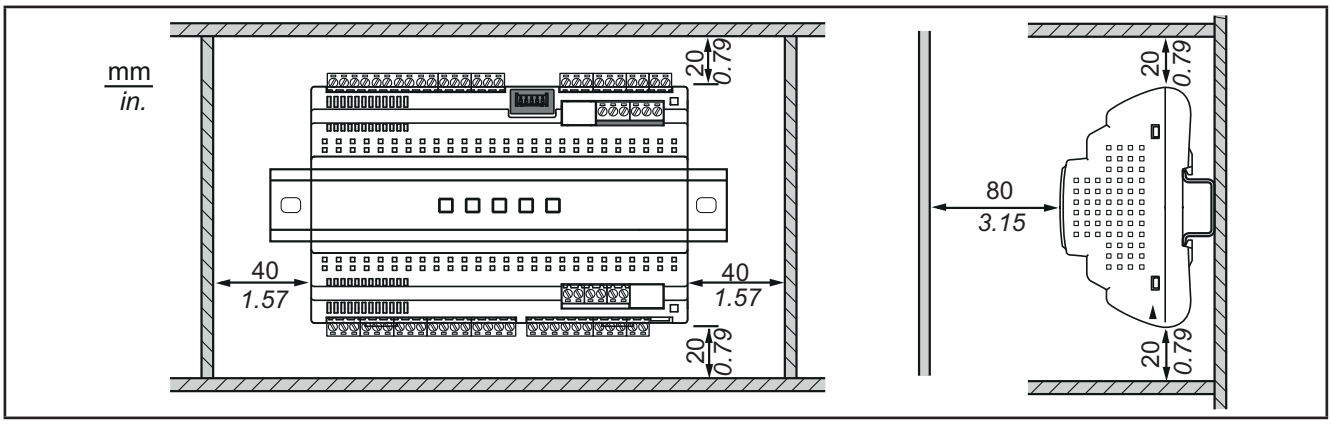

Fig. 7. Distances

2.7. RTD 600 /V INSTALLATION

The **RTD 600 /V** is designed for installation on a DIN rail.
For installation proceed as follows:

1. Move the two locking clips outwards (lever with a screwdriver in the compartments)
2. Mount the device on the DIN rail
3. Press the clips inwards to lock.

   NOTE: Once assembled on the DIN rail, verify that the clip docking devices are turned downwards.

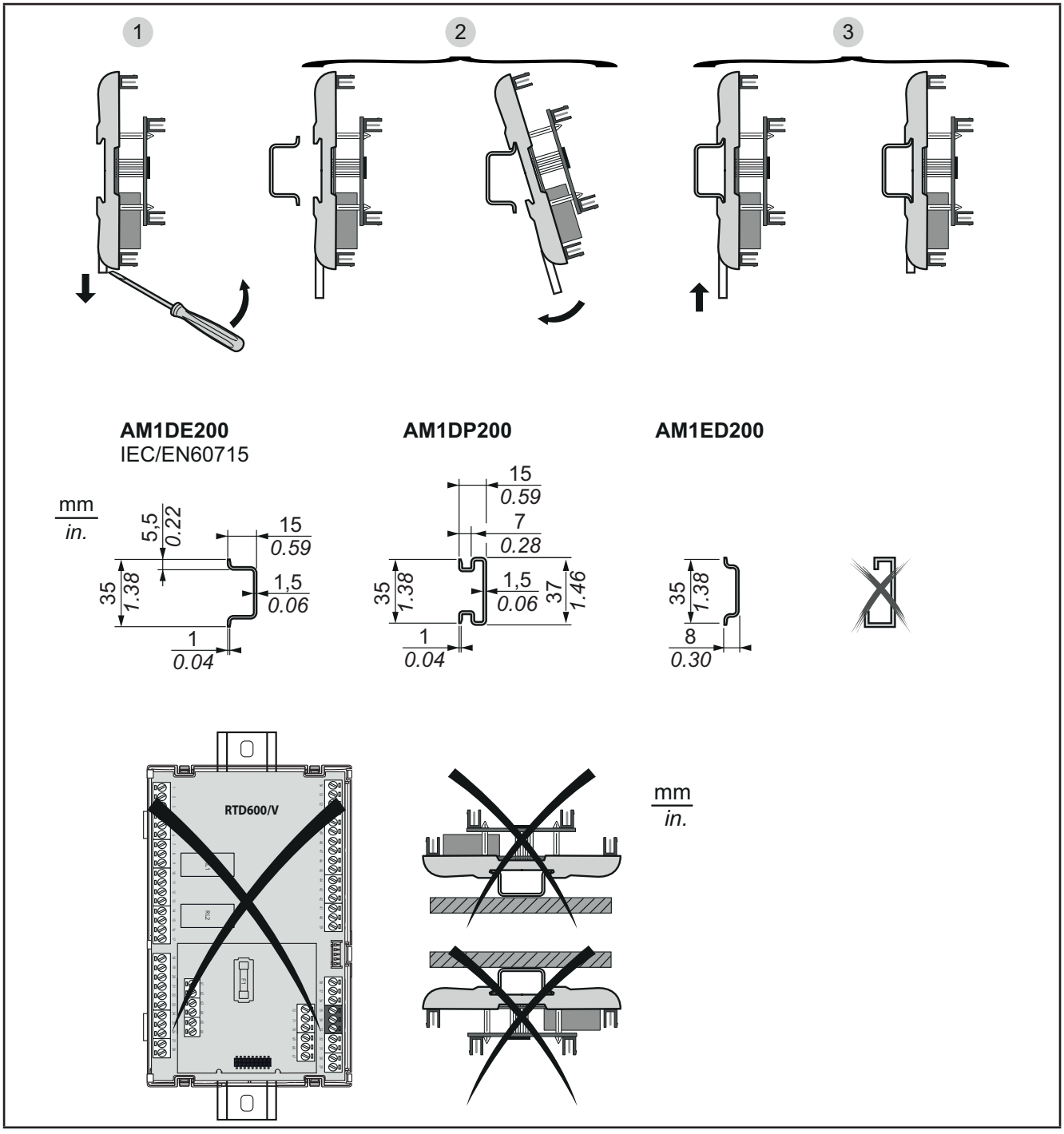

Fig. 8. Installation

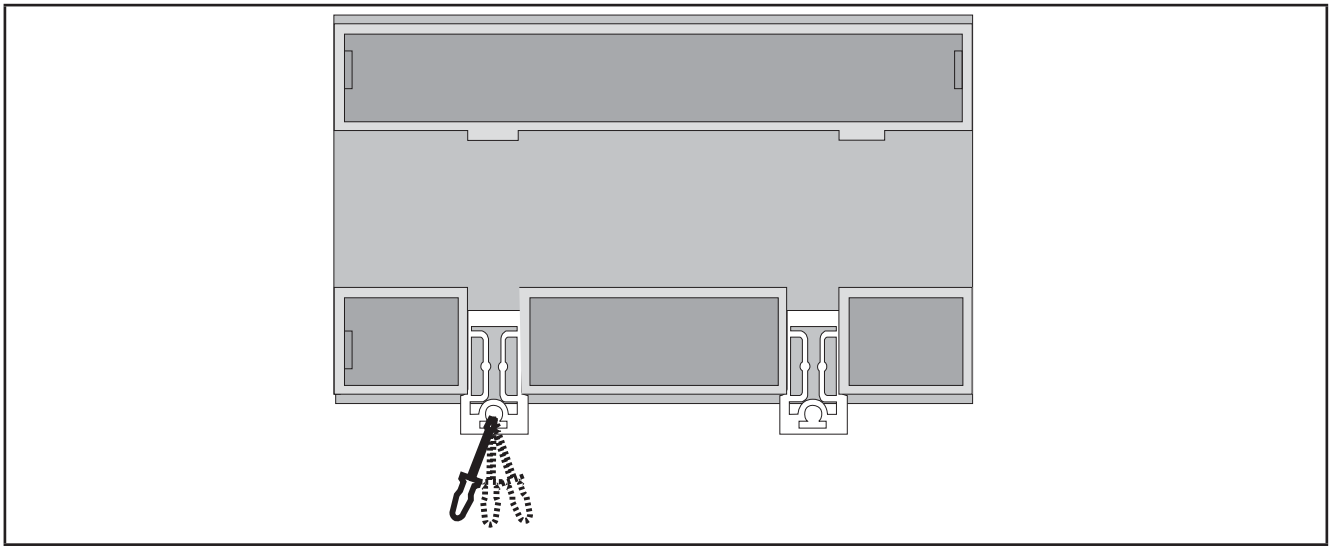

Fig. 9. Detail of sping hooking devices

The **RTD 600 /V** device must only be installed in type-approved cabinets and/or in points that prevent unauthorised access.

When installing the device, comply with a series of distances:

- **RTD 600 /V** and all sides of the cabinet (including the panel door).
- The terminal boards on the **RTD 600 /V** and the wiring cable trays. These distances reduce the electromagnetic interference between the device and the wiring cable trays.
- The **RTD 600 /V** and the other heat-generating devices installed in the same cabinet.

⚠ WARNING

INCORRECT OPERATION OF THE DEVICE

- Place the devices dissipating the most heat in the top of the cabinet and ensure suitable ventilation.
- Do not place these devices near or above any devices which could cause overheating.
- Install the device in a point that guarantees the minimum distances from all structures and adjacent equipment as indicated in this document.
- Install all equipment in conformity with the technical specifications given in the respective documentation.

Failure to follow these instructions can result in death, serious injury, or equipment damage.

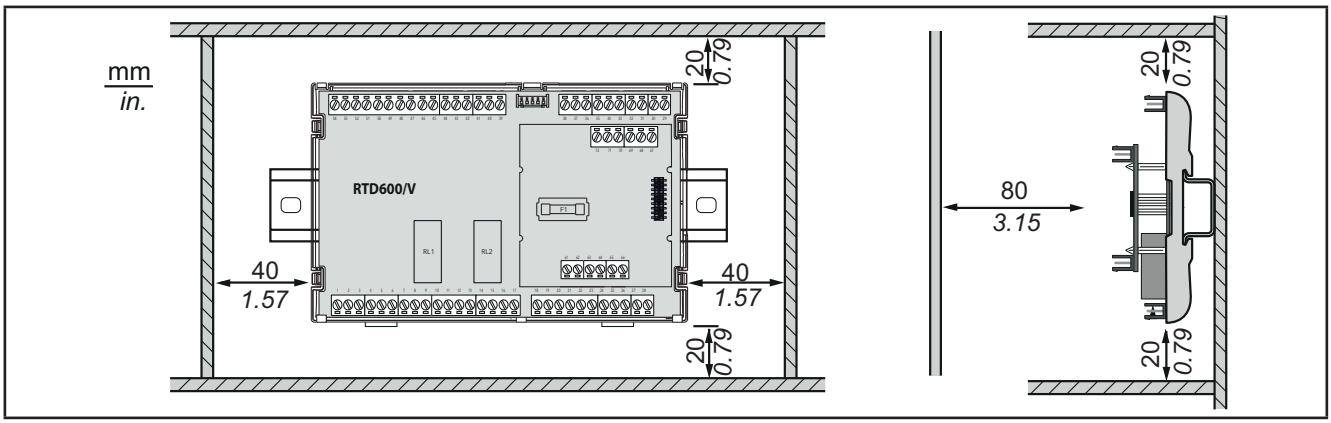

Fig. 10. Distances

2.8. KDEPLUS INSTALLATION

The **KDEPlus** keyboard is designed for panel assembly (on a flat surface) with supplied brackets.
For installation proceed as follows:

1. Make a 71x29 mm hole (2.80x1.14 in.).
2. Insert the keyboard.
3. Fix the brackets in the guides on the 2 sides of the keyboard to lock into place (you should hear a “Click”).
4. To remove press the brackets on the 2 sides of the device (“Click”), remove them and push the keyboard.
5. Remove the keyboard.

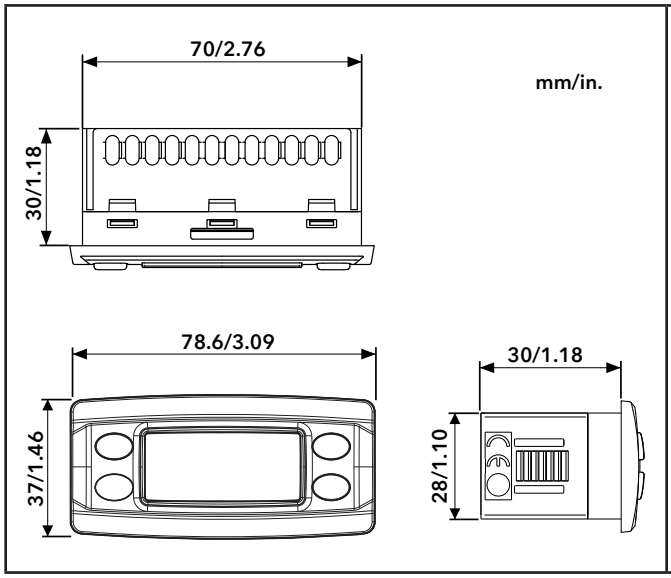

Fig. 11. Dimensions

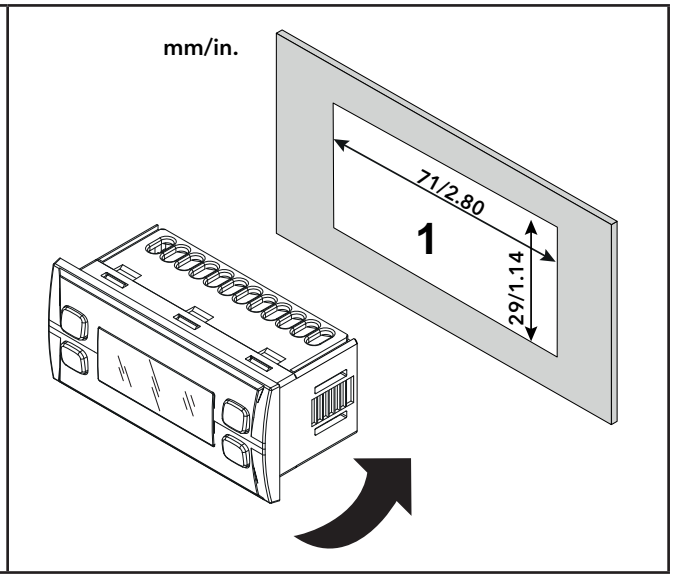

Fig. 12. Panel mounting

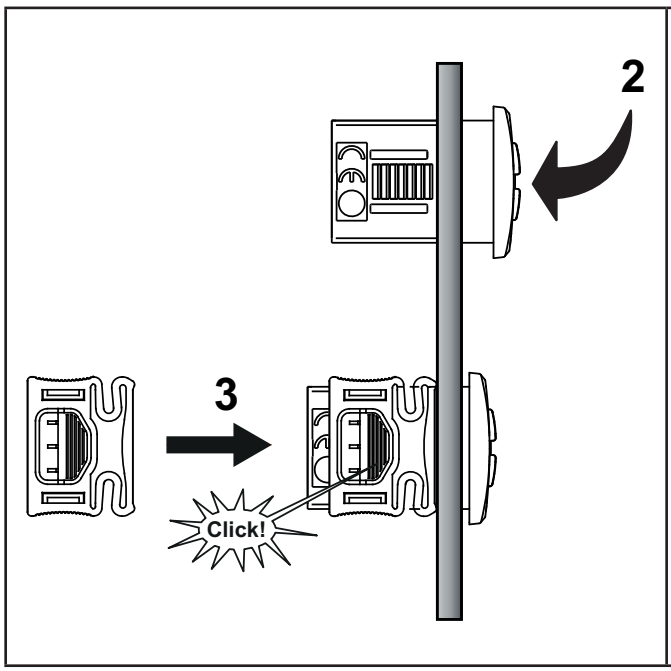

Fig. 13. Example of insertion

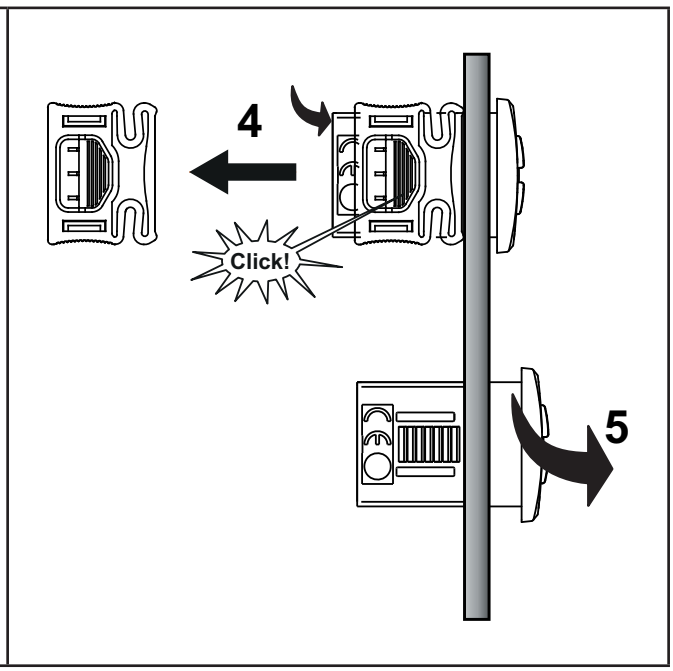

Fig. 14. Example of removal

2.9. KDWPLUS INSTALLATION

The keyboard is designed for panel assembly (on a flat surface) with supplied brackets.
For installation proceed as follows:

1. Make 1 150x31 mm hole (5.91x1.22 in.).
2. Make 2 holes Ø 3.2 mm (0.13 in.).
3. Insert the keyboard.
4. Place the screws in the holes on the keyboard and tighten.
5. Mount the front panel on the keyboard.
6. To remove, remove the front panel.
7. Unscrew the locking screws and push the keyboard.
8. Remove the keyboard.

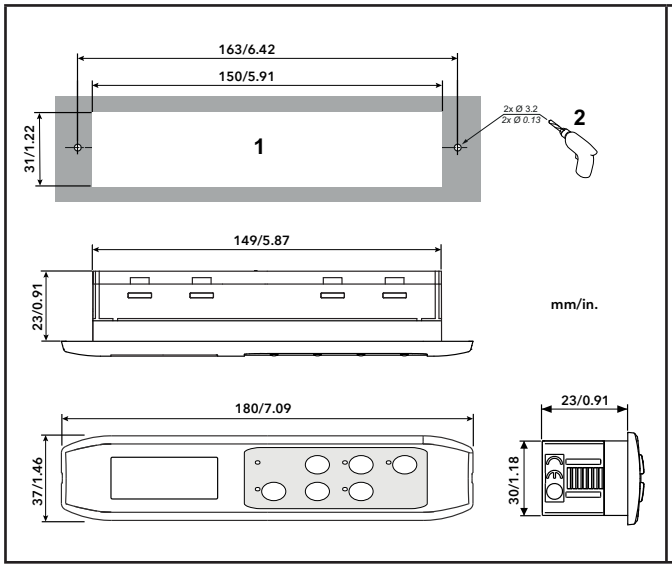

Fig. 15. Dimensions

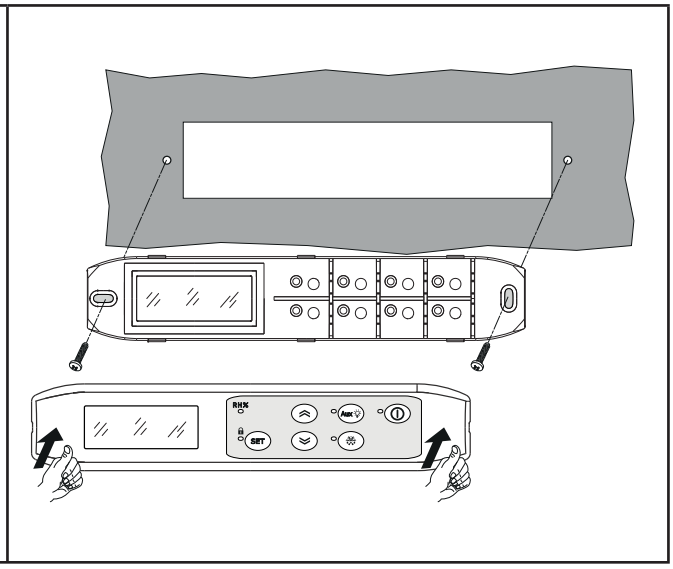

Fig. 16. Panel mounting

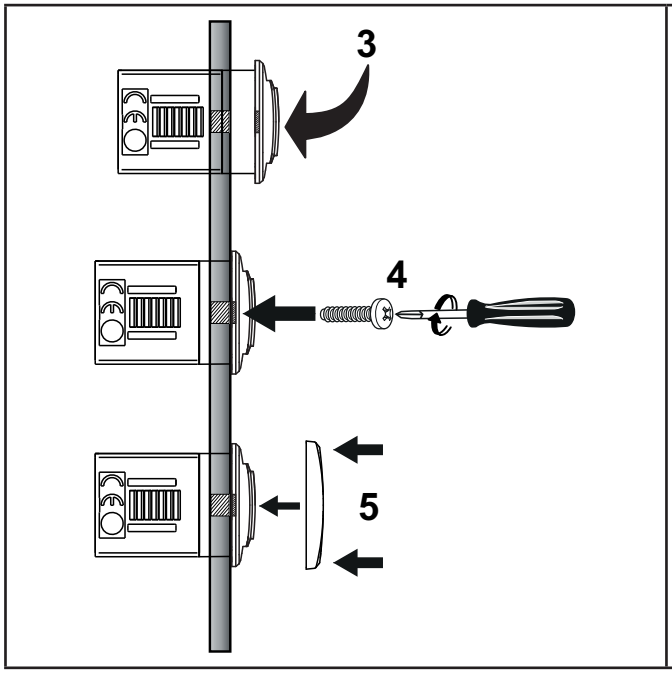

Fig. 17. Example of insertion

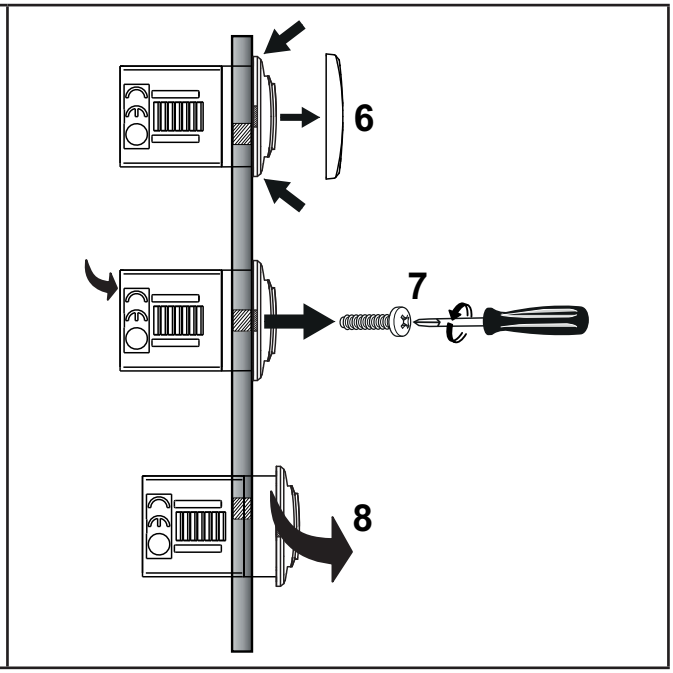

Fig. 18. Example of removal

2.10. KDT VERTICAL INSTALLATION

The **KDT Vertical** keyboard is suitable to be fitted to a STAINLESS STEEL flat surface.
For installation proceed as follows:

1. Make a 67x120 mm hole (2.64x4.72 in.).
2. Clean the surface to remove any greasy, dusty or dirty residues.
3. Remove the double-sided tape protection strip from the back of the keyboard.
4. Place the keyboard in the drilled space for gluing.
5. Remove the protective film from the front surface of the keyboard.

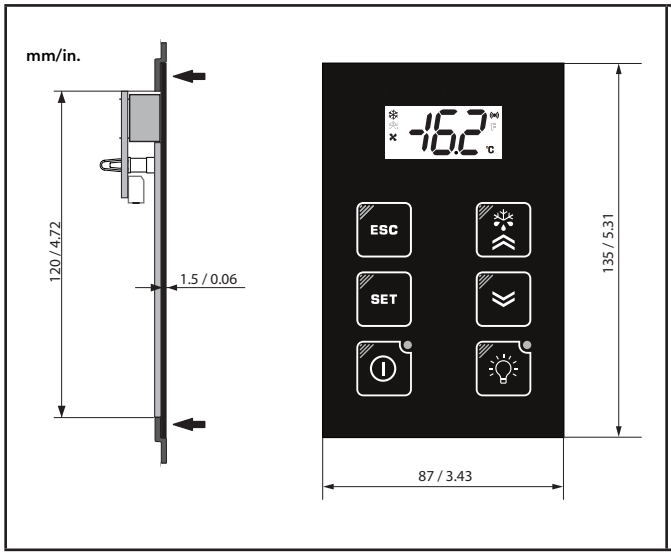

Fig. 19. Dimensions

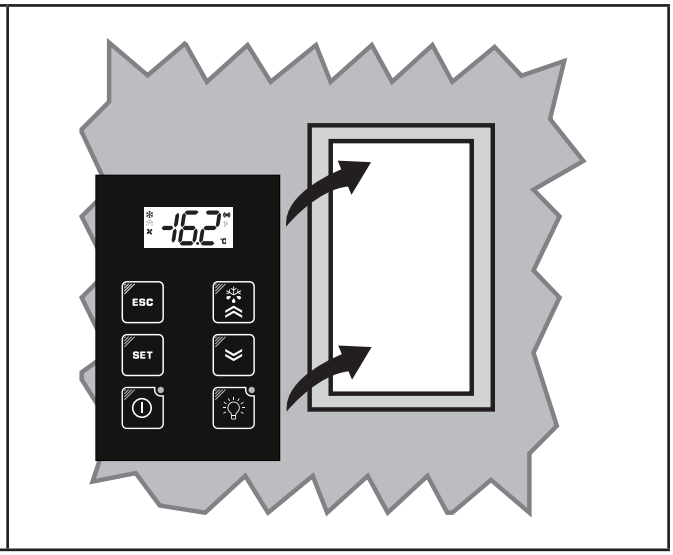

Fig. 20. Panel mounting

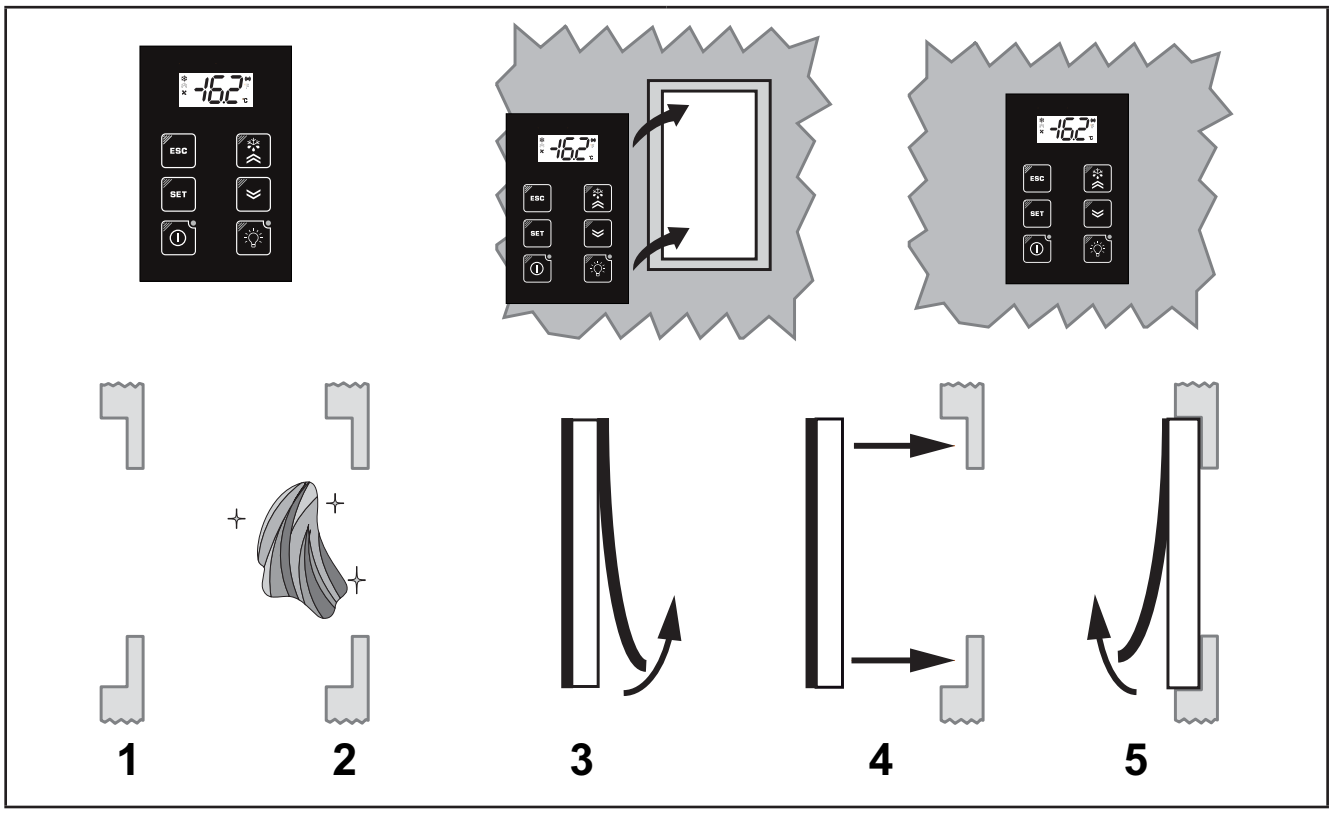

Fig. 21. Mounting example

2.11. KDT HORIZONTAL INSTALLATION

The **KDT Horizontal** keyboard is suitable to be fitted to a STAINLESS STEEL flat surface.
For installation proceed as follows:

1. Make a 150x31 mm hole (5.91x1.22 in.).
2. Clean the surface to remove any greasy, dusty or dirty residues.
3. Remove the double-sided tape protection strip from the back of the keyboard.
4. Place the keyboard in the drilled space for gluing.
5. Remove the protective film from the front surface of the keyboard.

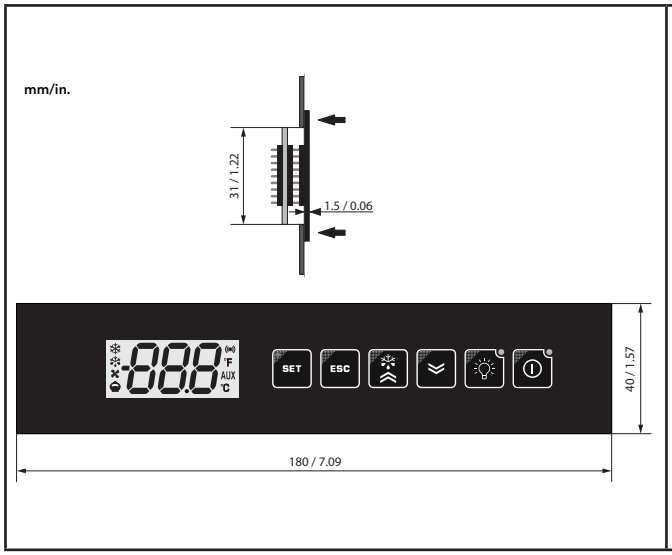

Fig. 22. Dimensions

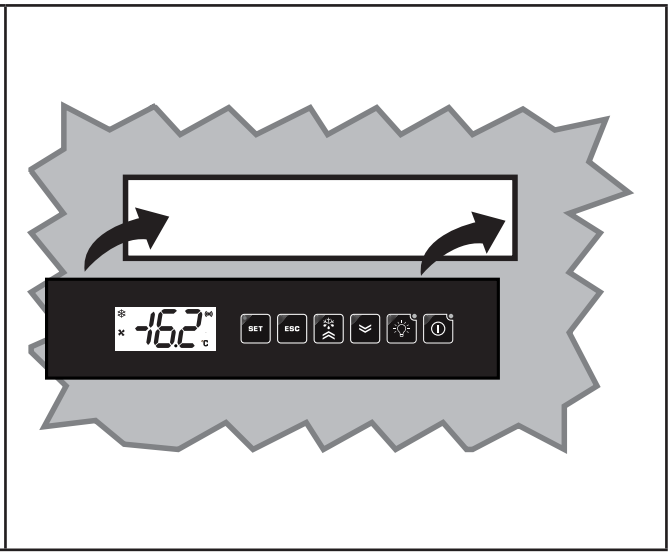

Fig. 23. Panel mounting

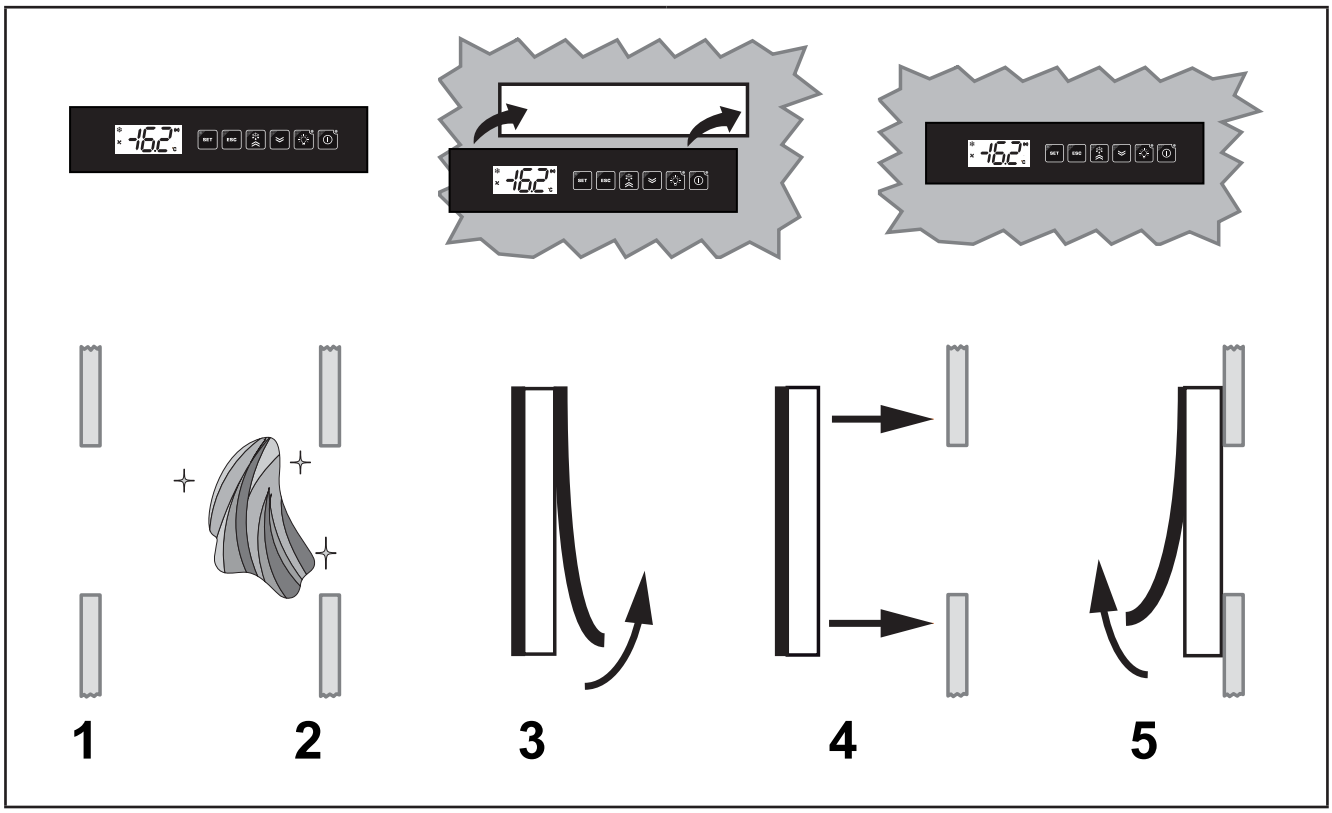

Fig. 24. Mounting example

2.12. ECPLUS INSTALLATION

The **ECPlus** display is designed for panel assembly (on a flat surface) with supplied brackets.
For installation proceed as follows:

1. Make a 45.9x26.4 mm hole (1.81x1.04 in.).
2. Inset the display.
3. Lock in position with the brackets on the 2 sides of the display (“Click”).
4. To remove press the brackets on the 2 sides of the display (“Click”), remove them and push the display.
5. Remove the display.

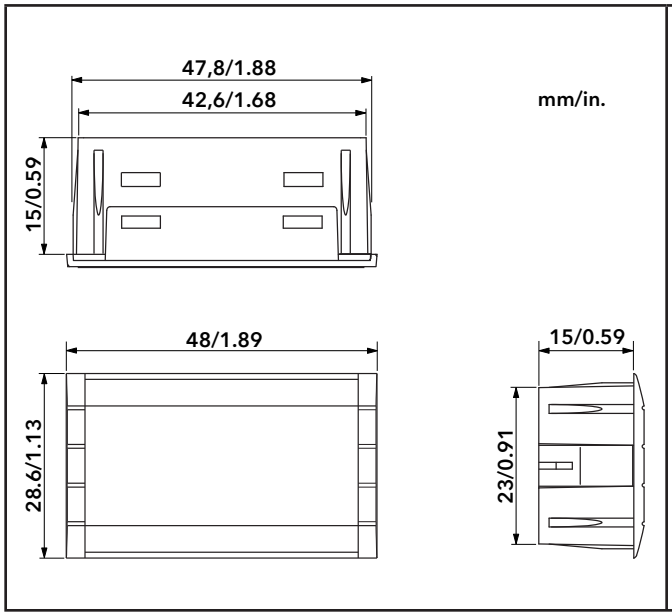

Fig. 25. Dimensions

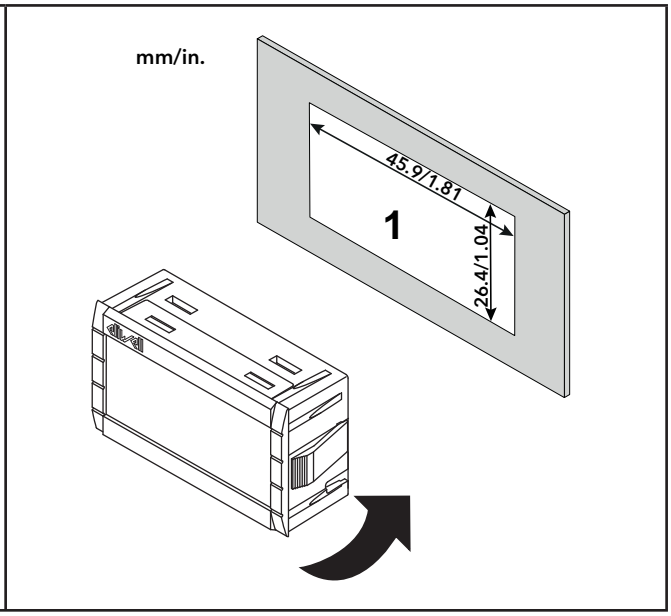

Fig. 26. Panel mounting

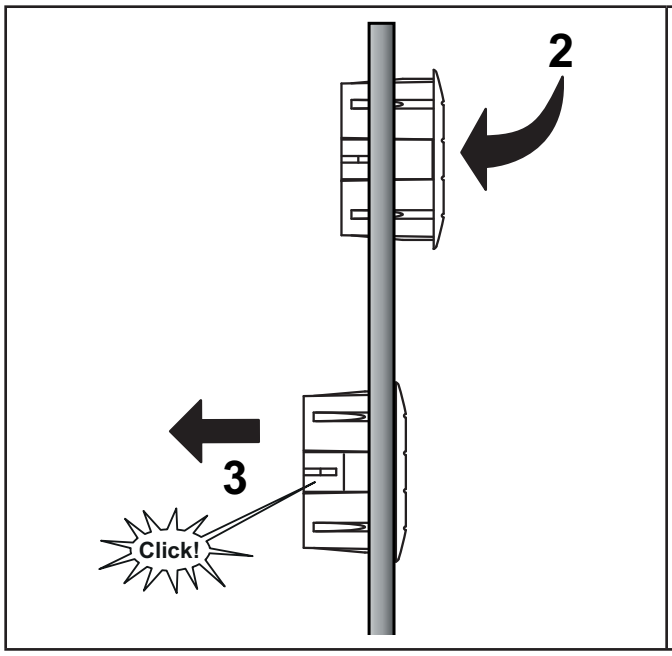

Fig. 27. Example of insertion

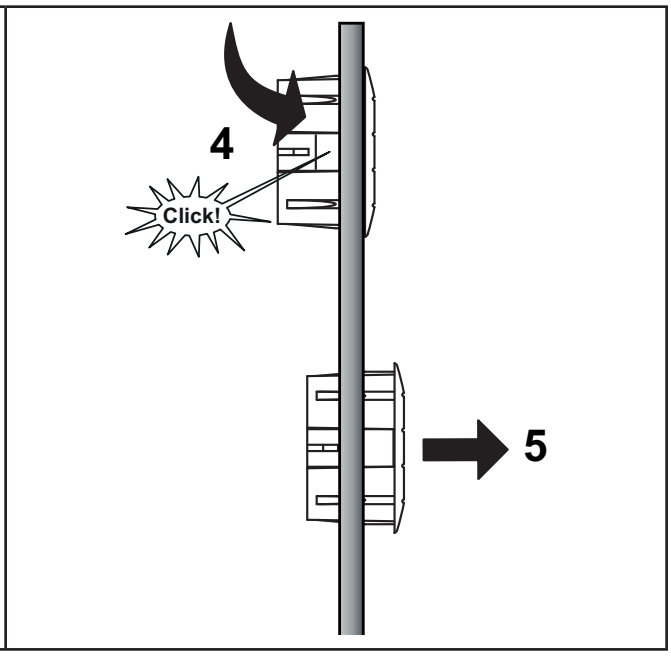

Fig. 28. Example of removal

CHAPTER 3
ELECTRICAL CONNECTIONS

3.1. WIRING PRACTICES

The following information describes the guidelines for wiring and the practices to follow when using the **RTX-RTD 600 /V** device.

⚠ ⚠ DANGER

HAZARD OF ELECTRIC SHOCK, EXPLOSION OR ELECTRIC ARC

- Disconnect all power from all devices including connected devices, prior to removing any covers or doors, or installing or removing any accessories, hardware, cables, or wires.
- Always use a properly rated voltage sensing device to confirm the power is off where and when indicated.
- Replace and secure all covers, accessories, hardware, cables and wires.
- Verify the earthing connections on all earthed devices.
- Use this equipment and all connected products only at the specified voltage.
- Do not connect the device directly to the line voltage, except where indicated otherwise.

Failure to follow these instructions will result in death or serious injury.

The final application must prevent the access to high voltage or moving parts through the hole for the keyboard (**KDEPlus**, **KDWPlus** or **KDT**) or the display (**ECPlus**) mounting given that the keyboard or the display cannot provide protection against this eventuality.

⚠ ⚠ DANGER

HAZARD OF ELECTRIC SHOCK OR ACCESS TO MOVING PARTS

Ensure that the display or keyboard is properly installed during normal operation.

Failure to follow these instructions will result in death or serious injury.

⚠ WARNING

LOSS OF CONTROL

- The installation designer must consider the potential failure modes of the control circuit and, for some critical control functions, provide a means for reaching a safe condition during and after a circuit failure. Examples of critical control functions are the emergency stop and end of travel stop, power supply cut-off and restarting.
- Separate or redundant control circuits must be provided for critical control functions.
- The system control circuits can include communication connections. Keep in mind the implications of transmission delays or sudden connection failures.
- Comply with all the standards regarding accident protection and the local applicable safety directives.
- Every implementation of this device must be tested individually and completely in order to verify its proper operation before putting it in service.

Failure to follow these instructions can result in death, serious injury, or equipment damage.

3.1.1. Wiring guidelines

Wire the **RTX-RTD 600 /V** device in accordance with the following rules:

- Keep separate the I/O and communication wiring from the electrical wiring.
  Keep in separate raceways these two types of wirings.
- Verify that the operating conditions and environment comply with the specification values.
- Use wires of the correct diameter and suited to the voltage and current requirements.
- Use copper conductors (obligatory).
- Use twisted-pair shielded wires for analogue and/or high-speed I/Os.
- Use twisted-pair shielded wires for networks and field buses.

Use correctly earthed shielded wires for all analogue and high-speed inputs and outputs and communication connections.
If shielded wires cannot be used for these connections, the electromagnetic interference may deteriorate the signal. Deteriorated signals can result in the device, modules or attached equipment operating incorrectly.

⚠ WARNING

INCORRECT OPERATION OF THE DEVICE

- Use shielded wires for all high-speed I/O, analogue I/O and communication signals.
- Ground (earth) the wire shields for all analogue I/O, high-speed I/O and communication signals to a single point.
- The signal cables (probes, digital inputs, communication, and relative power supplies) of the device must be routed separately from the power cables.
- Reduce the length of the wires and cables as much as possible and avoid winding them around electrically connected parts.

Failure to follow these instructions can result in death, serious injury, or equipment damage.

NOTE: Route the mains wiring (power wires) separately from the secondary wiring (very low voltage wire coming from intermediate power sources). Where this is not possible, double insulation is required in the form of cable recesses or cable trays.

3.1.2. Rules for screw-type terminal boards

The table below displays the type and the size of cables for disconnectable terminals with pitch **5.00** (0.197 in.) or **5.08** (0.20 in.):

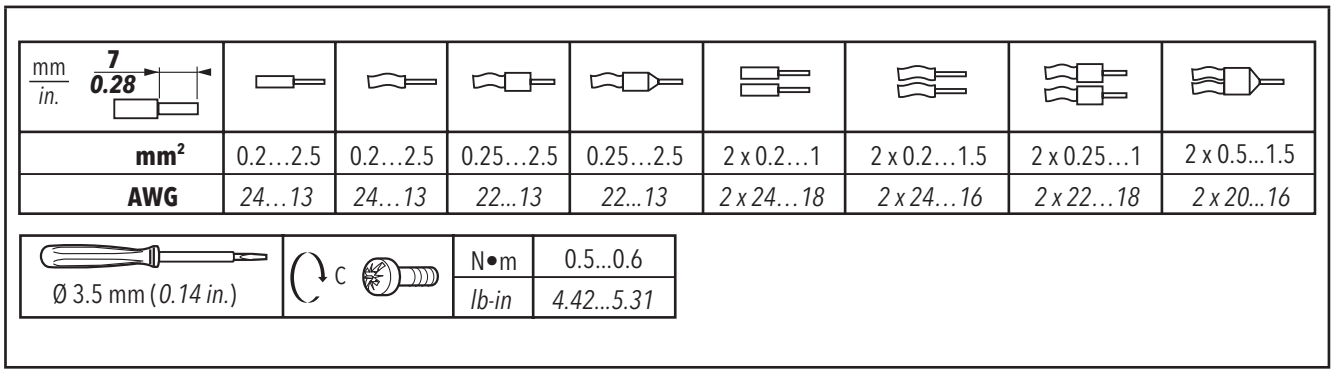

Fig. 29. Spacing 5.00 mm (0.197 in.) or 5.08 mm (0.20 in.)

⚠ ⚠ DANGER

LOOSE WIRING CAN RESULT IN ELECTRIC SHOCK

Tighten the connections in compliance with the torque technical specifications.

Failure to follow these instructions will result in death or serious injury.

⚠ DANGER

FIRE HAZARD

- Use only the recommended wire sections for current capacity of the I/O channels and the electrical power.
- For common relay output wiring use conductors with section of at least 2.0 mm² (AWG 14) with a nominal temperature value of at least 80 °C (176 °F).

Failure to follow these instructions will result in death or serious injury.

3.1.3. Protecting the outputs from damage from inductive loads

If the device has relay outputs, these types of outputs can cope with up to 240 Vac.

Damage from inductive loads to this type of outputs can cause the contacts to weld and lead to the loss of control.
Each inductive load must include a protective device such as a peak limiter or snubber.
These relays do not support capacitive loads.

⚠ WARNING

RELAY OUTPUTS WELDED TO CLOSED POSITION

- Use a suitable external protective device or circuit on all relay outputs connected to alternate current inductive loads.
- Do not connect the relay outputs to capacitive loads.

Failure to follow these instructions can result in death, serious injury, or equipment damage.

Depending on the load a protection circuit may be required for device outputs and certain modules.
Inductive load switching may create voltage impulses that damage, short-circuited or reduce the life of the output devices.

⚠ CAUTION

DAMAGE TO OUTPUT CIRCUITS DUE TO INDUCTIVE LOADS

Use an external protective device or circuit able to reduce the risks caused by voltage impulses in the switching of inductive loads.

Failure to follow these instructions can result in injury or equipment damage.

Choose a protection circuit from the following diagrams according to the electrical power used.
Connect the protection circuit to the outside of the device or relay output module.

Protection circuit A: this protection circuit uses a snubber and can be used for alternating current circuits. The snubber must be compatible with the type of charge and the RMS voltage of the snubber must be +10% higher than the charge voltage (for example: with a charge working at 250 Vac, the snubber must have a minimum voltage of 275 Vac).

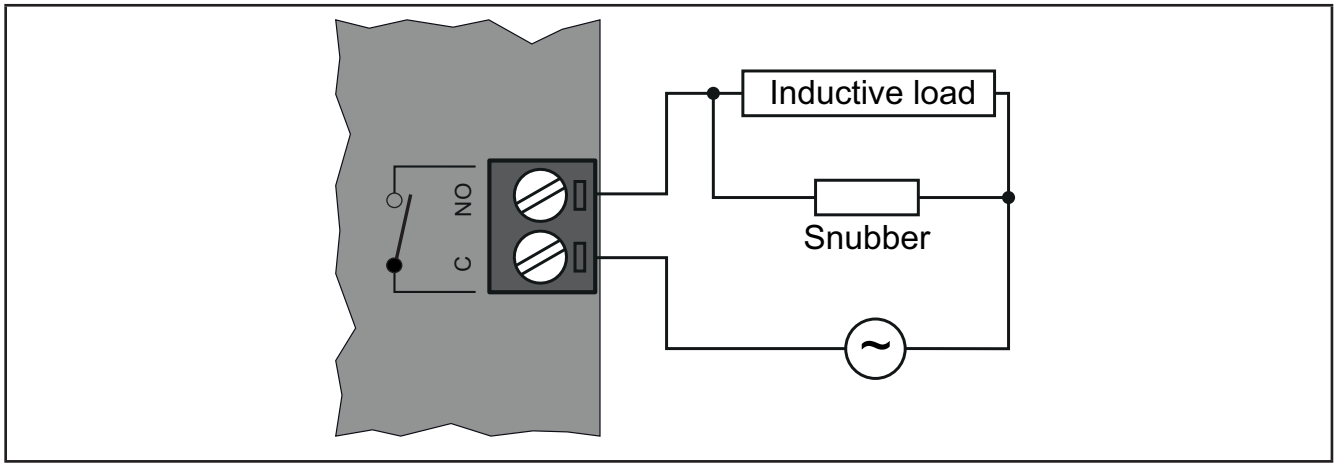

Fig. 30. Protection circuit A

Protection circuit B: this protection circuit uses a varistor and can be used for alternating current circuits. In applications in which the inductive load is frequently and/or rapidly switched on and off, verify that the maximum continuous energy (U) of the varistor is 20% or more higher than the peak load energy, and the clamping voltage on the varistor is not less than 1.6 times the charge voltage.

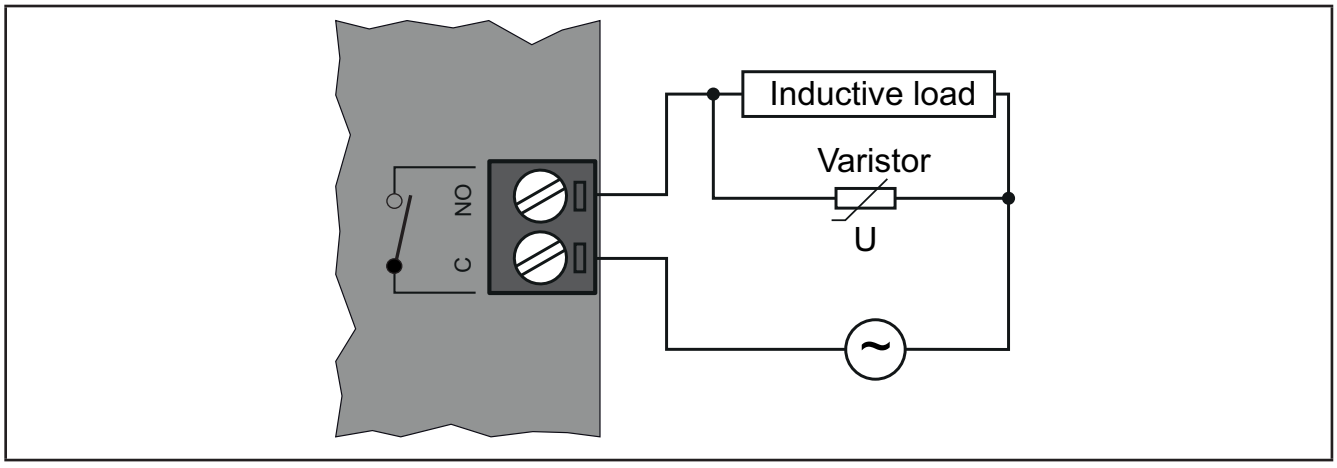

Fig. 31. Protection circuit B

NOTE: Place the protection devices as close as possible to the load.

3.1.4. Specific considerations for handling

When handling the equipment use caution to avoid damage caused by electrostatic discharge.

In particular the unshielded connectors and in certain cases the open circuit boards are extremely vulnerable to electrostatic discharge.

⚠ WARNING

INCORRECT OPERATION OF EQUIPMENT DUE TO ELECTROSTATIC DISCHARGE

- Keep the device in the protective packaging until ready for installation.
- The device must only be installed in type-approved cabinets and/or in points that prevent accidental access and provide protection from electrostatic discharge.
- When handling sensitive equipment, use a earthed protective device against electrostatic discharge.
- Before handling the device, always discharge the static electricity from the body by touching an earthed surface or type-approved antistatic mat.

Failure to follow these instructions can result in death, serious injury, or equipment damage.

Before any operations, verify that the device is connected to a suitable external power supply.

Refer to **“5.6. Power supply” on page 49** and **“5.7. EEV PULSE power supply” on page 49**.

Before connecting the valve, carefully configure the device selecting the type of valve from the list of valves. Refer to **“8.1.1. List of compatible / pilotable valves” on page 66.**

⚠ WARNING

INCORRECT OPERATION OF THE DEVICE

Verify the valve parameters declared by the manufacturer before using the valve in generic valve configuration.

Failure to follow these instructions can result in death, serious injury, or equipment damage.

3.1.5. Analogue inputs-probes

The temperature probes do not feature any connection polarity and can be extended using normal bipolar cable.

⚠ WARNING

INCORRECT OPERATION OF EQUIPMENT DUE TO CONNECTIONS

- Apply the electrical power supply to all devices powered externally after applying the electrical power to the RTX-RTD 600 /V device.
- Signal leads (probes, digital inputs, communication, and the signal electronic supply) must be routed separately from power and supply cables.

Failure to follow these instructions can result in death, serious injury, or equipment damage.

NOTICE

INOPERABLE DEVICE

Verify all wiring before switching on the electrical power.

Failure to follow these instructions can result in equipment damage.

NOTE: Extending the probes affects the electromagnetic compatibility (EMC) of the device.

NOTE: Probes requiring a specific polarity must respect the correct connection polarity.

3.1.6. Serial connections

The **RTX-RTD 600 /V** device has the following serial communication ports:

- 1 RS485 serial opto-isolated for monitoring
- 1 serial for connection to local Link^2 network
- 1 serial for keyboard connection (**KDEPlus**, **KDWPlus**, **KDT**) or display **ECPlus** connection

Take extra care when connecting serial lines.
Incorrect wiring may cause the device to work incorrectly or not at all.

RS485 serial

- Use a shielded and 'twisted-pair' cable specific to RS485 (for example: BELDEN cable model 9842).
  For laying wires, comply with the indications given in standard EN 50174 on information technology wiring.
  Take extra care in separating data transmission circuits from power lines.
- The length of the RS485 network connected directly to the device is 1200 m.
  (in accordance with ANSI TIA/EIA RS-485-A and ISO 8482:1987 (E)).
- The Modbus protocol can manage up to 247 devices.
- Single terminal board with 3 conductors: use all 3 conductors
  ('+' and '-' for the signal; 'G' for 0 V signal earth).
- The network must have BUS DAISY CHAIN topology and be equipped with 120 Ω - 1/4 W terminal resistors between the '+' and '-' terminals on each of the two ends of the BUS or enable those already integrated in the device.

Do not communicate on the RS485 serial port if the UNICARD/DMI/Multi Function Key is connected and viceversa.

NOTICE
INOPERABLE DEVICE
Connect only the RS485 serial or the TTL (for UNICARD/DMI/Multi Function Key).
Failure to follow these instructions can result in equipment damage.

Link^2 serial connection

- Use a shielded and 'twisted-pair' cable specific to RS485 (for example: BELDEN cable model 9842).
  For laying wires, comply with the indications given in standard EN 50174 on information technology wiring.
- A maximum of 8 devices can be connected to a Link^2 network.

Echo display or keyboard serial connection

Use the connection cable supplied with the keyboard (**KDEPlus**, **KDWPlus** or **KDT**) or display (**ECPlus**).

Take extra care when cutting one of the 2 cable connectors supplied and to the sequence of the wires for subsequent connection to the terminals on the **RTX-RTD 600 /V** card.

Refer to **"6.5. CONNECTIONS RTX 600 /V WITH KEYBOARD AND DISPLAY" on page 54**.
Refer to **"6.6. CONNECTIONS RTD 600 /V WITH KEYBOARD AND DISPLAY" on page 55**.

3.2. CONNECTORS

The **RTX-RTD 600 /V** has inside a “Main board” and an “Upper card”.

For the connectors to the “Main board”, refer to **“3.2.1. Base board connectors” on page 36**.

For the connectors to the “Upper card”, refer to **“3.2.2. Upper board connectors” on page 37**.

On **RTX 600 /V** the Input/Output and port labels are marked on the cover of the device.
On **RTD 600 /V** the Input/Output and port numbers are marked on the circuit boards.

3.2.1. Base board connectors

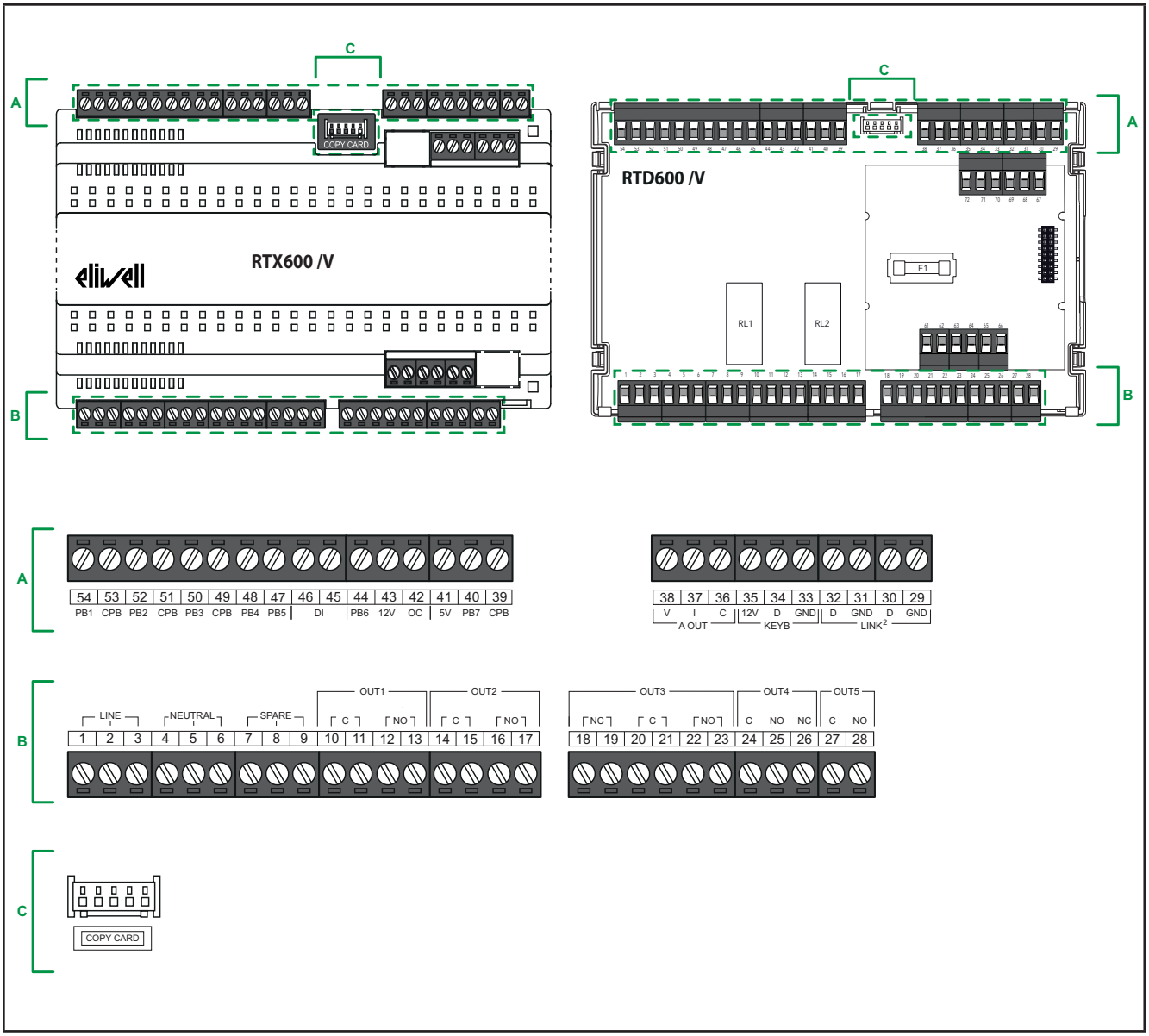

Fig. 32. Base board connectors

3.2.2. Upper board connectors

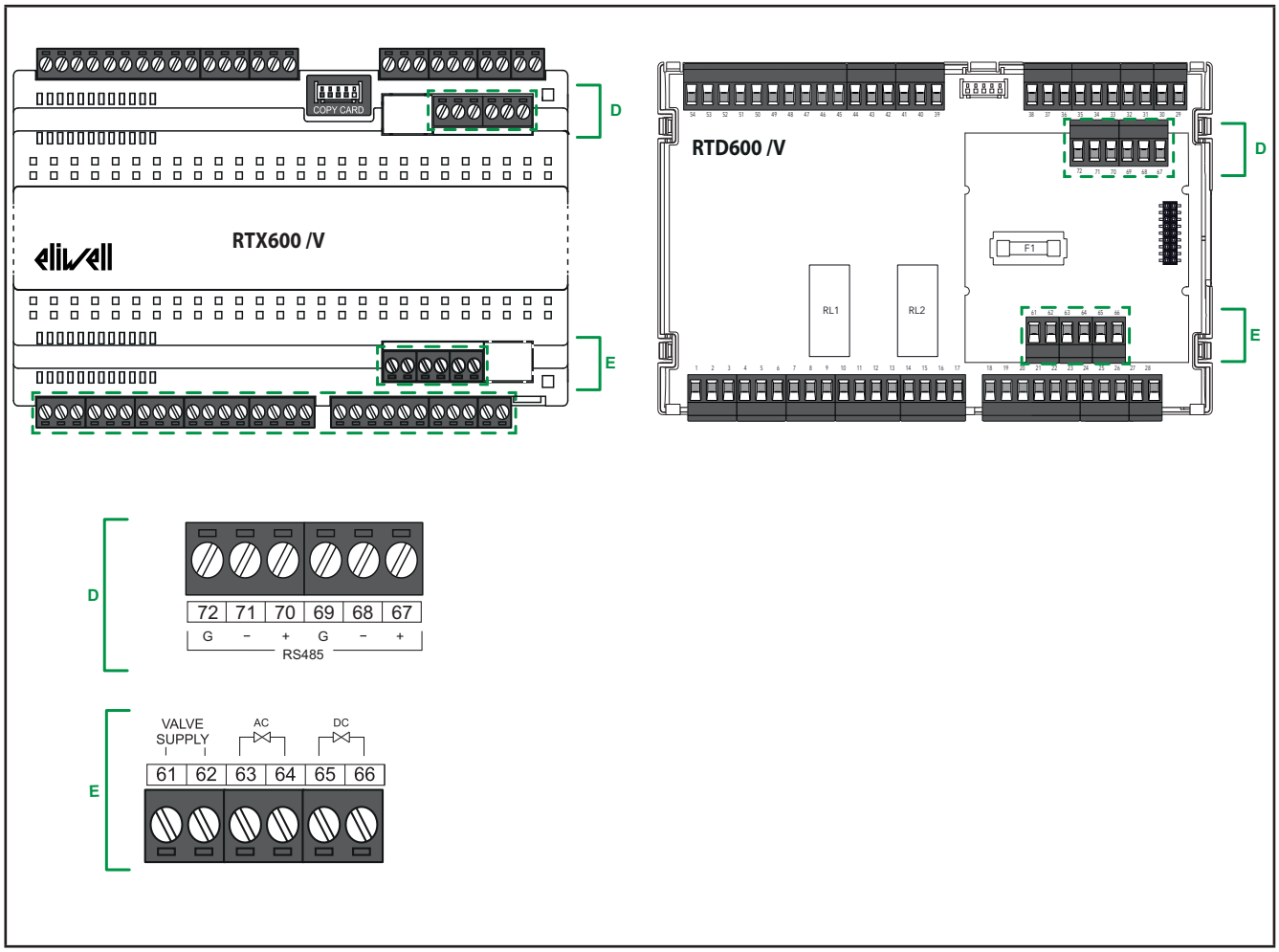

Fig. 33. Upper board connectors

3.3. DEVICE WIRING DIAGRAMS

Incorrect wiring will cause irreversible damage to the **RTX-RTD 600 /V**.

For the wiring diagram refer to **“3.3.1. Base board wiring diagram” on page 38** and the wiring diagram described in **“3.3.2. Upper board wiring diagram” on page 40.**

NOTICE
INOPERABLE DEVICE
Verify all wiring before switching on the electrical power.
Failure to follow these instructions can result in equipment damage.

3.3.1. Base board wiring diagram

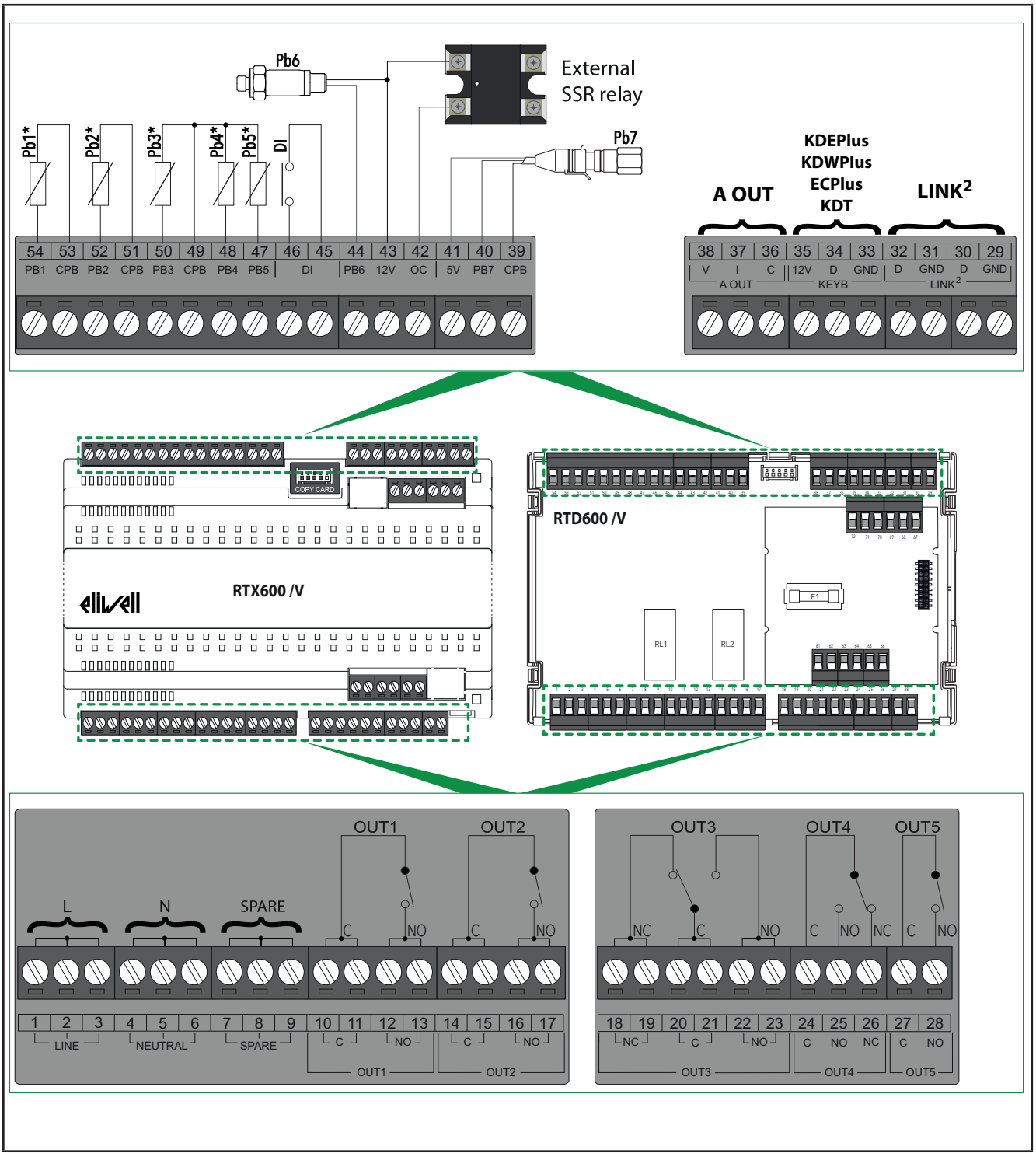

Fig. 34. Base board wiring diagram

For more information see **“TECHNICAL DATA” on page 46**.

Base board terminal labels

The following terminals are mounted on the base:

	Label		Terminal	Description
POWER SUPPLY	LINE		1-2-3	Power line
	NEUTRAL		4-5-6	Neutral power supply
	SPARE		7-8-9	Auxiliary terminals not connected internally
OUTPUTS DIGITAL	OUT1	C	10-11	OUT1 relay Common terminal
		NO	12-13	OUT1 relay Normally Open
	OUT2	C	14-15	OUT2 relay Common terminal
		NO	16-17	OUT2 relay Normally Open
	OUT3	NC	18-19	OUT3 relay Normally Closed
		C	20-21	OUT3 relay Common terminal
		NO	22-23	OUT3 relay Normally Open
	OUT4	C	24	OUT4 relay Common terminal
		NO	25	OUT4 relay Normally Open
		NC	26	OUT4 relay Normally Closed
	OUT5	C	27	OUT5 relay Common terminal
		NO	28	OUT5 relay Normally Open
LINK^2	LINK^2-1	GND	29	0 V connection 1 - local network signal earth
		D	30	Connection 1 - local network signal
	LINK^2-2	GND	31	0 V connection 2 - local network signal earth
		D	32	Connection 2 - local network signal
CONNECTION KEYPAD	KEYB	GND	33	0 V signal earth
		D	34	External keyboard data terminal
		12 V	35	+12 Vdc power output for external keyboard
OUTPUT DAC	A OUT	C	36	Common terminal
		I	37	Analogue current output (4...20 mA)
		V	38	Analogue voltage output (0...10 V)
Copy Card	TTL		---	TTL connection - UNICARD/DMI/Multi Function Key
PB7 - RATIOMETRIC TRANSDUCER	CPB		39	0 V signal earth
	PB7		40	Ratiometric transducer connection (probe Pb7)
	5V		41	Power output at +5 Vdc for ratiometric transducer
OUTPUT OPEN COLLECTOR	OC		42	DAC output For connection of an external SSR relay
	12 V		43	+12 Vdc power supply output for Open Collector output
PB6 - PRESSURE TRANSDUCER	12 V		43	Power output at +12 Vdc for pressure transducer
	PB6		44	Pressure transducer connection (probe Pb6)
DIGITAL INPUT	DI		45-46	Digital input
INPUTS ANALOGUE	PB5		47	Analogue input 5 (Pb5 probe)
	PB4		48	Analogue input 4 (Pb4 probe)
	CPB		49	0 V Pb3-Pb4-Pb5 analogue input signal earth
	PB3		50	Analogue input 3 (Pb3 probe)
	CPB		51	0 V Analogue input 2 signal earth
	PB2		52	Analogue input 2 (Pb2 probe)
	CPB		53	0 V Analogue input 1 signal earth
	PB1		54	Analogue input 1 (Pb1 probe)

3.3.2. Upper board wiring diagram

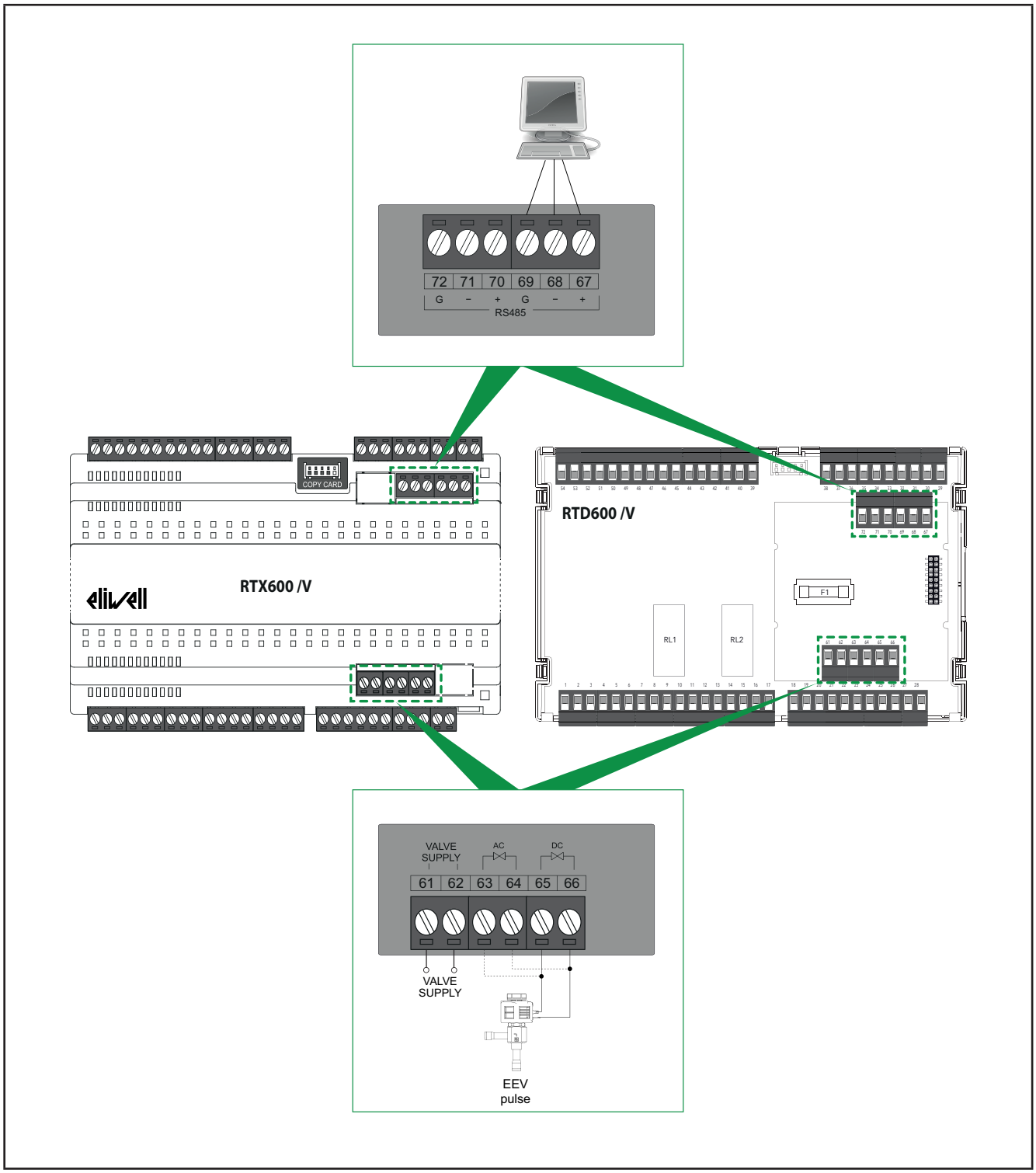

Fig. 35. Upper board wiring diagram

For more information see **“TECHNICAL DATA” on page 46**.

Upper board terminal labels

The following terminals are mounted on the upper board:

	Label	Terminal	Description
POWER SUPPLY PULSE VALVE	VALVE SUPPLY	61	Power supply input for pulse electronic expansion valve. Refer to **“5.7. EEV PULSE power supply” on page 49**
		62	
OUTPUT PULSE VALVE	AC	63	Terminals for connection of AC Valve
		64	
	DC	65	Terminals for connection of DC Valve
		66	
RS485-1	+	67	“+” signal for RS485-1 serial port
	-	68	“-” signal for RS485-1 serial port
	G	69	0 V signal earth
RS485-2	+	70	“+” signal for RS485-2 serial port
	-	71	“-” signal for RS485-2 serial port
	G	72	0 V signal earth

NOTES: - for the list of Compatible and Pilotable valves refer to section:
“8.1.1. List of compatible / pilotable valves” on page 66.
- for the connection diagrams refer to section:
“3.4. Pulse valve connection diagrams” on page 42.

3.4. PULSE VALVE CONNECTION DIAGRAMS

Take extra care when wiring the valve.
Select the valve coil with care, as appropriate, according to the voltage utilized.

⚠ WARNING

INCORRECT OPERATION OF THE DEVICE

Verify the valve parameters declared by the manufacturer before using the valve in generic valve configuration.

Failure to follow these instructions can result in death, serious injury, or equipment damage.

Schneider Electric and Eliwell are not liable for the data provided by the valve manufacturer, including any technical modifications or updates. Consult the product manual and the valve manual to verify the suitability and correct configuration.

NOTICE

INOPERABLE DEVICE

- Verify all wiring before switching on the electrical power.
- Verify the plate data before connecting the valve.
- Ensure to connect the valve coil to the right terminals of the device. The AC valve coil on terminals 63-64 or the DC valve coil on terminals 65-66.
- Connect the terminals 61-62 to an AC power source rated at RMS voltage value, equal to the RMS voltage value required by the coil in case of AC valve connected, or equal to the DC voltage value required by the coil in case of a DC valve connected (for example to drive a valve with a 240 Vdc coil, it must be applied an AC RMS voltage value of 240 Vac to the terminals 61-62).

Failure to follow these instructions can result in equipment damage.

Here below are the connection diagrams of pulse valves.
(refer to **“8.1.1. List of compatible / pilotable valves” on page 66**):

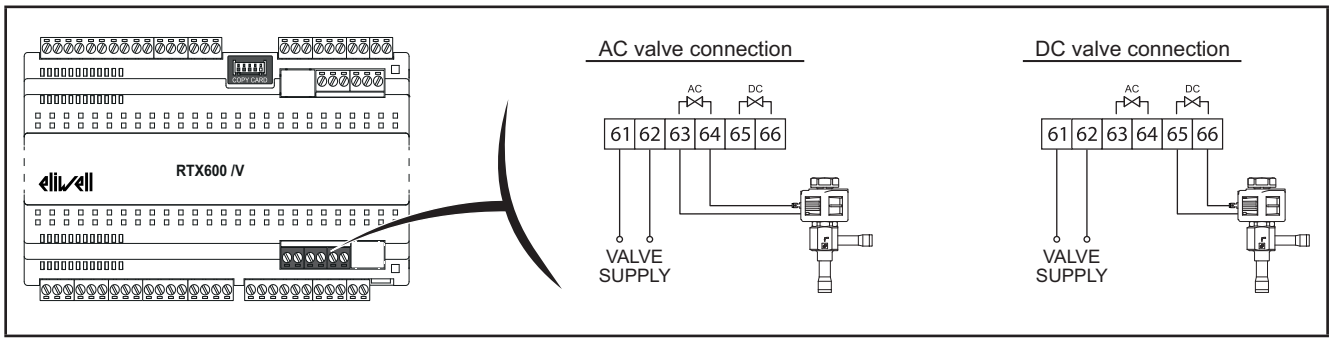

Fig. 36. RTX 600 /V: Connection diagram

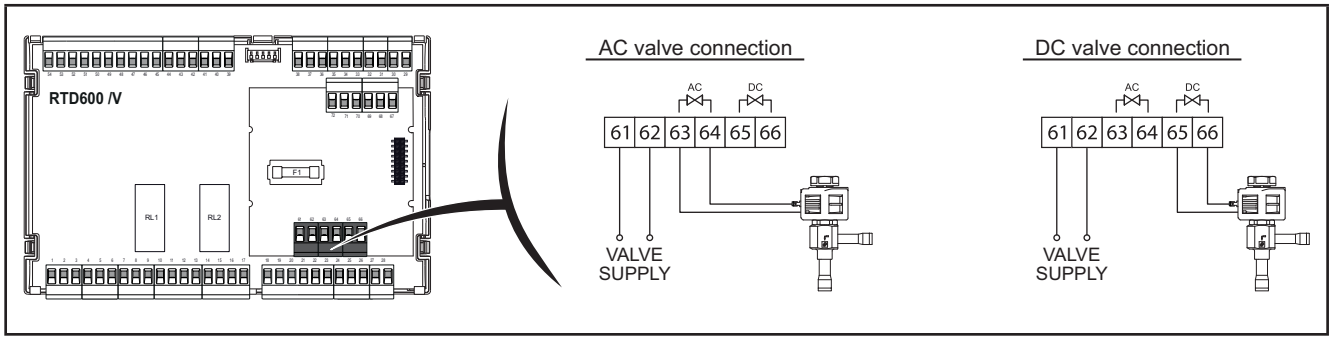

Fig. 37. RTD 600 /V: Connection diagram

CHAPTER 4
APPLICATIONS

4.1. SUMMARY

Description of Applications

DESCRIPTION OF APPLICATIONS
AP1: cabinet - resistive defrosting. **AP2**: cell - resistive defrosting. **AP3 ... AP8**: cabinet - resistive defrosting.

Summary of Applications

FUNCTION / APPLICATION			AP1	AP2	AP3 ... AP8
INPUTS					
Pb1	NTC		**Regulator 1 /**	**Regulator 1 /**	**Regulator 1 /**
Pb2	NTC		/	/	/
Pb3	NTC		-	-	-
Pb4	NTC		-	-	-
Pb5	NTC		**EEV**	**EEV**	**EEV**
DI	par. **H18**		-		-
Pb6	4...20 mA - par. **H16**		**EEV**	**EEV**	**EEV**
Pb7	Ratiometric		-	-	-
OUTPUTS					
OUT1	Relay				
OUT2	Relay	**RTX 600 /V**			
		RTD 600 /V			
OUT3	Relay				
OUT4	Relay	**RTX 600 /V**			
		RTD 600 /V			
OUT5	Relay				
EEV	Output		**EEV**	**EEV**	**EEV**
A OUT	Output		-	-	-
OC	Output		-	-	-

Regulation
Regulator 1 of **RTX-RTD 600 /V** will activate when the temperature exceeds T > SP1+dF1 and disables when T < SP1. For these applications, the regulation differential is managed as a relative value.

4.2. APPLICATIONS AP1 AND AP3...AP8

The application is configured for "**CABINETS**" with average temperature and resistive defrost indicated for storage of Dairy Products and Fruit/Vegetables. The set configuration includes:

APPLICATION	APPLICATION DATA
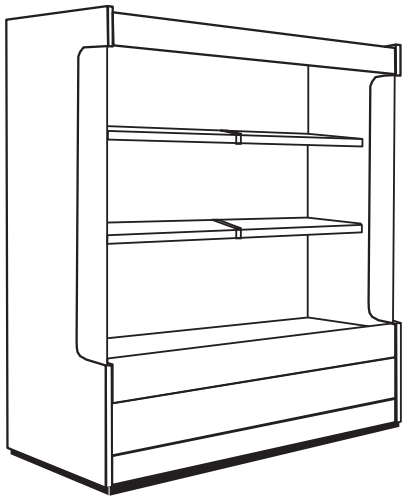	The Input, Output and Key settings are shown below: **Input configuration:** • Input Pb1 = Control 1 / Alarm • Input Pb2 = Defrost / Evaporator fans • Input Pb3 = Not set • Input Pb4 = Not set • Input Pb5 = EEV valve temperature sensor • Input Pb6 = EEV valve pressure transducer • Input Pb7 = Not set • Input DI = Not set **Output configuration:** • OUT1 (relay) = Compressor • OUT2 (relay) = RTX 600 /V (Evaporator fans) = RTD 600 /V (Light) • OUT3 (relè) = Sbrinamento • OUT4 (relè) = RTX 600 /V (Light) = RTD 600 /V (Evaporator fans) • OUT5 (relay) = Alarm • EEV (relay) = EEV valve • A OUT = Not set • OC = Not set **Key configuration:** • UP key = Manual defrost • DOWN key = Not set • ESC key = standby

APPLICATION DIAGRAM

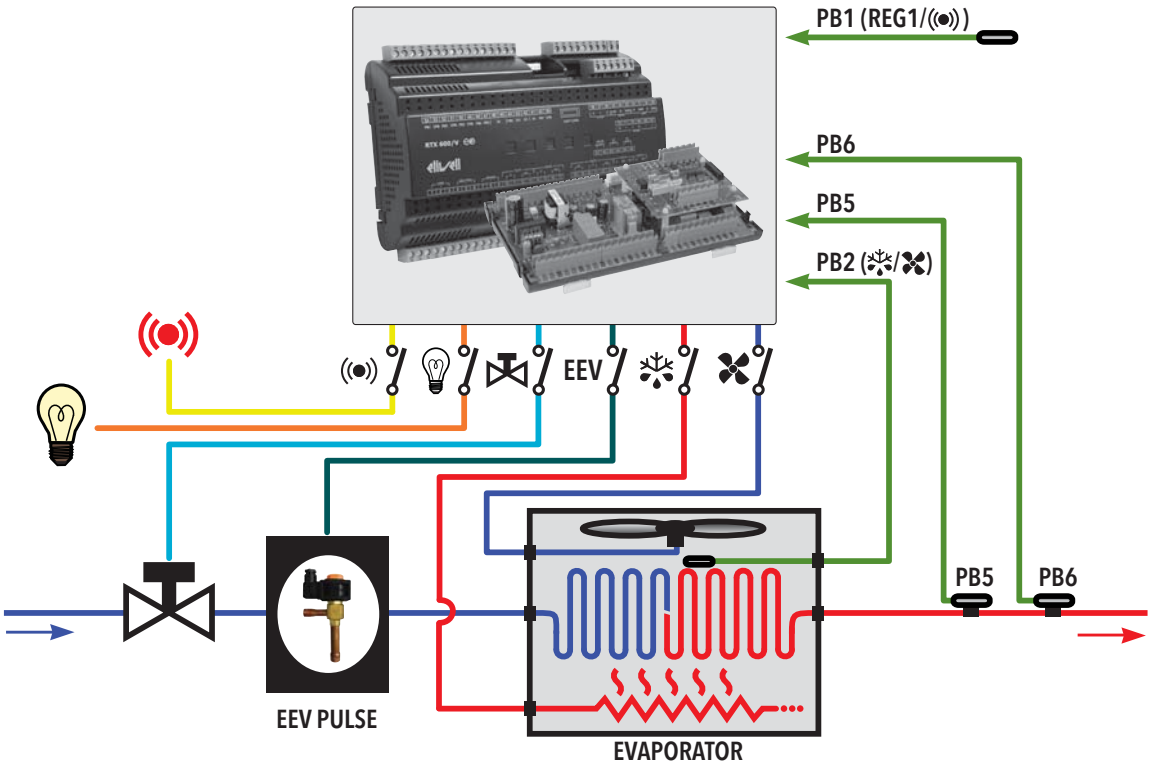

4.3. APPLICATION AP2

The application is configured for low temperature and defrosting by timeour “**CABINETS**” for the storage of Frozen foods. The set configuration includes:

APPLICATION	APPLICATION DATA
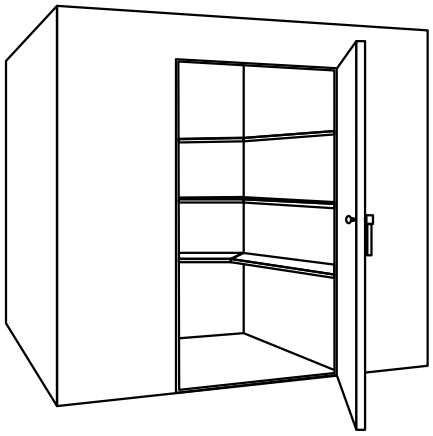	The Input, Output and Key settings are shown below: **Input configuration:** • Input Pb1 = Control 1 / Alarm • Input Pb2 = Defrost / Evaporator fans • Input Pb3 = Not set • Input Pb4 = Not set • Input Pb5 = EEV valve temperature sensor • Input Pb6 = EEV valve pressure transducer • Input Pb7 = Not set • Input DI = Door switch **Output configuration:** • OUT1 (relay) = Compressor • OUT2 (relay) = RTX 600 /V (Evaporator fans) = RTD 600 /V (Light) • OUT3 (relè) = Sbrinamento • OUT4 (relè) = RTX 600 /V (Light) = RTD 600 /V (Evaporator fans) • OUT5 (relay) = Alarm • EEV (relay) = EEV valve • A OUT = Not set • OC = Not set **Key configuration:** • UP key = Manual defrost • DOWN key = Not set • ESC key = standby

APPLICATION DIAGRAM

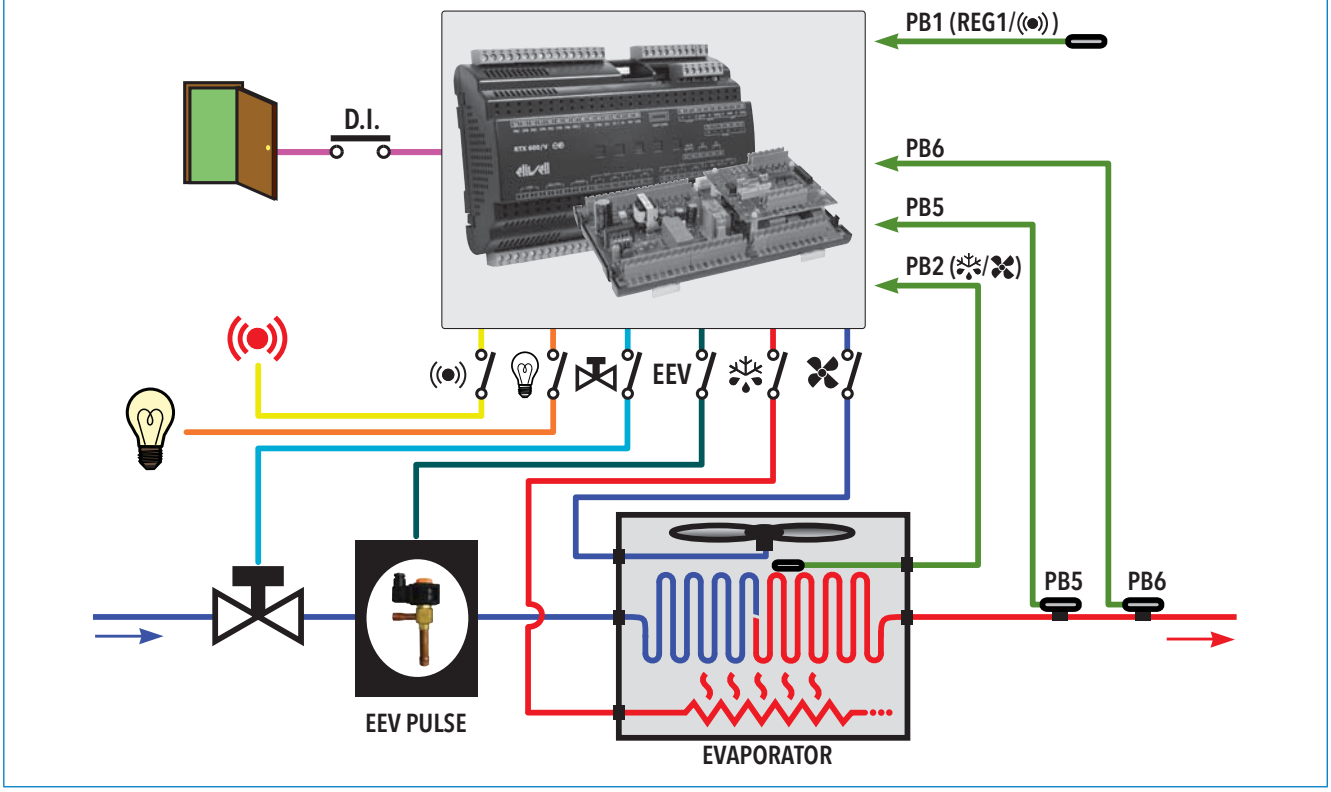

CHAPTER 5
TECHNICAL DATA

All components in the **RTX-RTD 600 /V** devices system meet the European Community (CE) requirements for open devices.

They must be installed in a cabinet or other designated place to suit the environmental conditions and minimise the risk of involuntary contact with high voltages. Use metal casings to improve the immunity of the **RTX-RTD 600 /V** devices system to electromagnetic fields.
This device meets the CE requirements indicated in the table below.

The application of incorrect current and voltage values to the analogue inputs and outputs may damage the electronic circuits. Moreover, connecting a current input of a device to an analogue input configured for voltage and vice versa will also damage the electronic circuits.

NOTICE

INOPERABLE DEVICE

- Do not apply voltages over 11 V to the controller analogue inputs when the analogue input is configured as a 0-5 V or 0-10 V input.
- Do not apply currents over 30 mA to the controller analogue inputs when the analogue input is configured as an input 0-20 mA or 4-20 mA.
- Do not mismatch applied signal with analog input configuration.

Failure to follow these instructions can result in equipment damage.

5.1. ENVIRONMENTAL AND ELECTRICAL CHARACTERISTICS

Feature	Description
Power supply:	SMPS 100...240 Vac (±10 %)
EEV pulse power supply:	100...240 Vac (±10 %)
Power supply frequency:	50/60 Hz
Absorbed power:	7.5 W max
Operating temperature:	-5.0...55.0 °C (23.0...131 °F)
Storage temperature:	-30.0...85.0 °C (-22.0...185 °F)
Operating humidity:	10...90 %RH (non-condensing)
Storage humidity:	10...90 %RH (non-condensing)

If the current limits within the specified temperature interval are not maintained, the products may malfunction, be damaged or stop working.

⚠ WARNING

INCORRECT OPERATION OF THE DEVICE

Do not exceed any of the nominal values specified in the environmental and electrical characteristics tables.

Failure to follow these instructions can result in death, serious injury, or equipment damage.

Feature	Description
It conforms to the following harmonised standards:	EN 60730-2-9 / EN 60730-1
Classification:	electronic automatic control device (not safety) device to be incorporated
Mounting:	on DIN Rail
Type of action:	1.B
Pollution class:	2 (normal)
Insulating material class:	IIIa
Over-voltage category:	II
Nominal pulse voltage:	2500 V
Fire resistance category:	D
Software class:	A
Digital outputs:	Refer to **“5.4. Output Characteristics” on page 48**
Fuse:	Certified according to IEC 60127-1 Model: 5x20; Value: 1A fast - 250V

5.2. MECHANICAL CHARACTERISTICS

The mechanical characteristics of the **RTX-RTD 600 /V** are:

Feature	Description
Casing:	PC+ABS resin casing, UL94 V-0
Dimensions:	10 DIN rail
Terminals:	Removable screw terminals for wires with max cross-section 2.5 mm^2 (14 AWG)

	Length (mm / in.)	Height (mm / in.)	Depth (mm / in.)
RTX 600 /V - RTD 600 /V (terminals excluded)	175 / 6.88	110 / 4.33	60 / 2.36 - 55 / 2.17

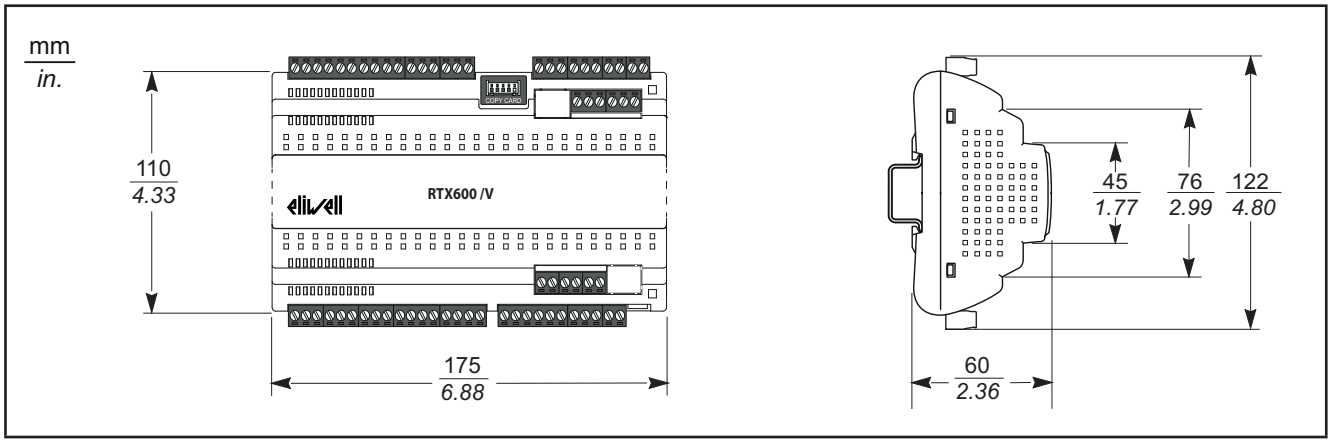

Fig. 38. RTX 600 /V mechanical dimensions

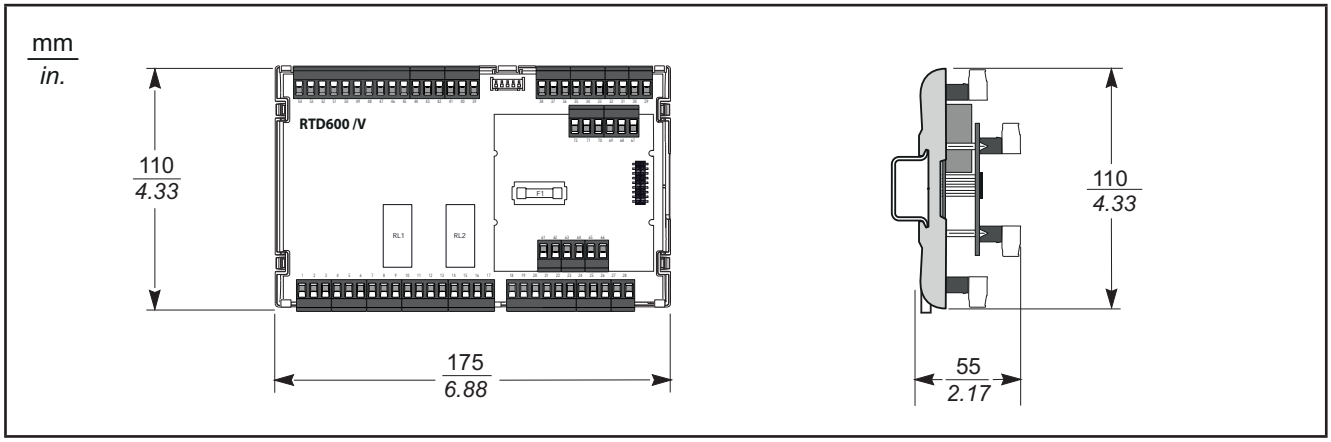

Fig. 39. RTD 600 /V mechanical dimensions

5.3. INPUT CHARACTERISTICS

The characteristics of the inputs on the **RTX-RTD 600 /V** are as follows:

Feature	Description
Measurement range:	**NTC**: -50.0...110 °C (-58.0...230 °F)
	PTC: -55.0...150 °C (-67.0...302 °F)
	Pt1000: -60.0...150 °C (-76.0...302 °F)
Display:	3 digits + sign
Accuracy:	±1.0 °C/°F for temperatures below -30.0 °C (-22.0 °F)
	±0.5 °C/°F for temperatures between -30.0...25.0 °C (-22.0...77.0 °F)
	±1.0 °C/°F for temperatures above 25 °C (77 °F)
Resolution:	1 or 0.1 °C/°F
Buzzer:	NO
Analogue/Digital Inputs:	**Pb1**: NTC / PTC / Pt1000 / DI configurable input
	Pb2: NTC / PTC / Pt1000 / DI configurable input
	Pb3: NTC / PTC / Pt1000 / DI configurable input
	Pb4: NTC / PTC / Pt1000 / DI configurable input
	Pb5: NTC / PTC / Pt1000 / DI configurable input
	Pb6: 4...20 mA / DI configurable input
	Pb7: ratiometric / DI configurable input
	DI: multifunction digital voltage free input

Analogue inputs configured as digital inputs are not isolated.

NOTICE

INCORRECT INPUT WIRING TO NON-ISOLATED INPUTS

Use only clean contact type inputs on analogue inputs configured as digital inputs.

Failure to follow these instructions can result in equipment damage.

5.4. OUTPUT CHARACTERISTICS

The characteristics of the outputs on the **RTX-RTD 600 /V** are as follows:

Feature	Description	EN 60730 (max 250 Vac)
RTX 600 /V Digital outputs:	**OUT1** (SPST relay)	NO 16(5) A
	OUT2 (SPST relay)	NO 16(5) A
	OUT3 (SPDT relay)	NO 16(5) A - NC 16 A resistive
	OUT4 (SPDT relay)	NO 8(4) A - NC 6(3) A
	OUT5 (SPST relay)	NO 8(4) A
RTD 600 /V Digital outputs:	**OUT1** (SPST relay)	NO 16(5) A
	OUT2 (SPST relay)	NO 16A resistive Suitable for incandescent lamp
	OUT3 (SPDT relay)	NO 16(5) A - NC 16 A resistive
	OUT4 (SPDT relay)	NO 8(4) A - NC 6(3) A
	OUT5 (SPST relay)	NO 8(4) A
OC (Open Collector) output:	**OC**: multifunctional output: 12 Vdc - 20 mA	
DAC output:	**A OUT**: multifunctional output: 0...10 Vdc / 4...20 mA	
EEV pulse driver output:	SSR relay 100...240 Vac/dc - Imax = 300 mA	

5.5. SERIALS

Serial	Description	Notes
TTL	1 TTL serial	Connection between the controller and the accessories for rapid programming of UNICARD, Multi Function Key and Device Manager (via DMI)
RS485	1 split RS485 serial	If the controller is connected at the end of the RS485 communication line, apply a 120 Ω terminal resistor between the “+” and “-” line on the RS485
LINK^2	1 split Link^2 serial	Connection between more than one controller (max 8) forming a local network
KEYB	1 serial for connection to keyboard	• Connection between the controller and the external keyboard **KDEPlus**, **KDWPlus** or **KDT** • Connection between the controller and the display **ECPlus**

For more information refer to **“3.1.6. Serial connections” on page 35**.
Take great care with the connecting of the serial lines. Incorrect wiring may cause the device to stop working.

Do not communicate on the RS485 serial port if the UNICARD/DMI/Multi Function Key is connected and vice-versa.

NOTICE

INOPERABLE DEVICE

Connect only the RS485 serial or the TTL (for UNICARD/DMI/Multi Function Key).

Failure to follow these instructions can result in equipment damage.

5.6. POWER SUPPLY

The device can be powered at a voltage of 100...240 Vac (±10%) 50/60 Hz.

According to the requirements of the individual unit and/or the country of installation, if the mains voltage in the country is within the operating range, the controller can be connected directly to the mains.

5.7. EEV PULSE POWER SUPPLY

Select the valve coil with care, as appropriate, according to the voltage utilized.
Schneider Electric and Eliwell are not liable for the data provided by the valve manufacturer, including any technical modifications or updates. Consult the product manual and the valve manual to verify the suitability and correct configuration.

NOTICE

INOPERABLE DEVICE

- Verify all wiring before switching on the electrical power.
- Verify the plate data before connecting the valve.
- Ensure to connect the valve coil to the right terminals of the device. The AC valve coil on terminals 63-64 or the DC valve coil on terminals 65-66.
- Connect the terminals 61-62 to an AC power source rated at RMS voltage value, equal to the RMS voltage value required by the coil in case of AC valve connected, or equal to the DC voltage value required by the coil in case of a DC valve connected (for example to drive a valve with a 240 Vdc coil, it must be applied an AC RMS voltage value of 240 Vac to the terminals 61-62).

Failure to follow these instructions can result in equipment damage.

CHAPTER 6
USER AND START-UP INTERFACE

6.1. LED

RTX-RTD 600 /V controllers can work even if not connected to a keyboard.
If a **KDEPlus**, **KDWPlus** or **KDT** keyboard are connected (these are equivalent), the display is as follows:

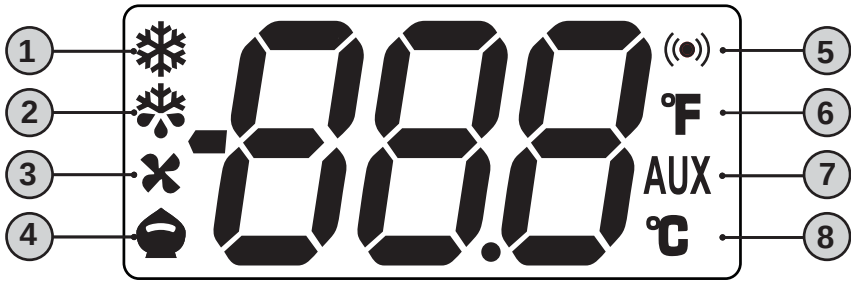

Meaning of LEDs:

No	Icon	LED	Operation	Meaning
1	❄	Compressor	Permanently on	compressor on
			Blinking	delay, protection or activation blocked
			OFF	otherwise
2	❄	Defrost	Permanently on	defrost active
			Blinking	manual activation or from Digital Input
			OFF	otherwise
3	✱	Fans	Permanently on	fans active
			OFF	otherwise
4		Reduced SET / Economy	Permanently on	Energy Saving active
			Blinking	reduced setpoint active
			OFF	otherwise
5	((●))	Alarm	Permanently on	alarm active
			Blinking	alarm acknowledged
			OFF	otherwise
6	°F	°F readout	Permanently on	°F setting (dro (1) = F)
			OFF	otherwise
7	AUX	AUX	Permanently on	Aux output active and/or light on
			Blinking	deep cooling cycle active
			OFF	otherwise
8	°C	°C readout	Permanently on	°C setting (dro (0) = C)
			OFF	otherwise

NOTE: When the device is powered on it performs a lamp test, during which time the display and LEDs will flash for several seconds to verify that they all function correctly.

6.2. KDEPLUS KEYS

The **KDEPlus** keyboard has 4 keys as shown in the figure:



Each key has a different function depending on whether it is:

- pressed and released
- pressed for at least 5 seconds
- pressed and held at Start-up

KEYS

The following table summarises the function of each key:

No	Key	Action		
		Press and release	**Press for at least 5 s**	**Start-up**
1		• Scrolls through menu options • Increases values	Activates the Manual Defrost function (when outside the menus)	---
2		• Scrolls through menu options • Decreases values	Function configurable by user (when outside the menus) (see parameter H32)	---
3		• Goes back up one level from current menu • Confirms parameter value	Activates the Standby function (when outside the menus)	---
4	set	• Displays alarms (if present) • Opens Machine Status menu • Confirms commands	Opens Programming menu (User and Installer Parameters)	When pressed during start-up, it enables the user to select the application to be loaded.

6.3. KDWPLUS KEYS AND ADDITIONAL LEDS

The **KDWPlus** keyboard has 6 keys and 5 LEDs as shown in the figure:

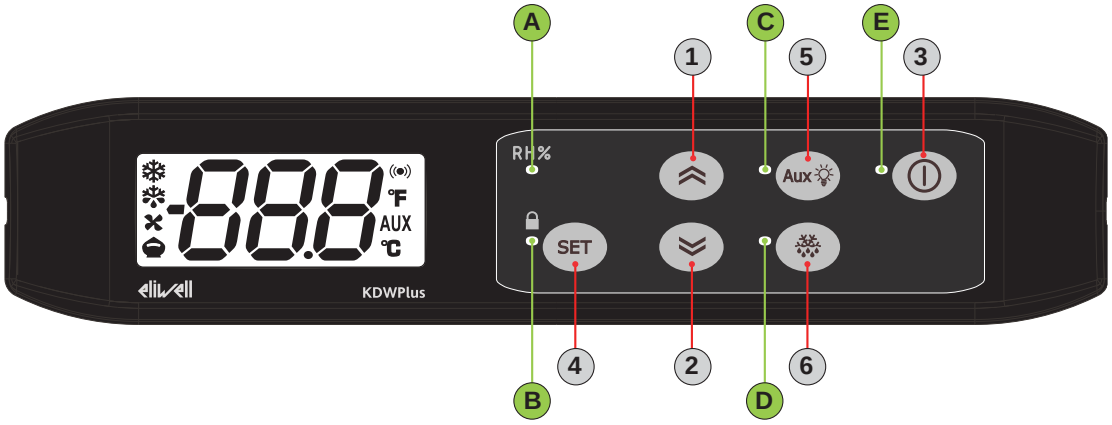

Each key has a different function depending on whether it is:

- pressed and released
- pressed for at least 5 seconds
- pressed and held at Start-up

KEYS

The following table summarises the function of each key:

No	Key	Action		
		Press and release	Press for at least 5 s	Start-up
1		• Scrolls through menu options • Increases values	User configurable function (from outside menus). (see parameter H31)	---
2		• Scrolls through menu options • Decreases values	Function configurable by user (when not in the menus) (see parameter H32)	---
3		• Goes back up one level from current menu • Confirms parameter value	• Activates the Stand-by function (from outside menus). (see parameter H33)	---
4	set	• Displays alarms (if present) • Opens Machine Status menu • Confirms commands	Opens Programming menu (User and Installer Parameters)	when pressed during start-up, it enables the user to select the application to be loaded.
5		• Activates the Manual Defrost function • Goes back up one level from current menu	---	---
6	Aux	Activates the AUX output / Switches on the light	---	---

LED

The following table summarises the function of each LED:

No	LED	Description	No	LED	Description
A	RH%	Fans forced ON (H1x = 15)	D		Defrost active
B		Keyboard Locked	E		Device switched off
C	Aux	Light relay on from key			

6.4. KDT KEYS AND ADDITIONAL LEDS

The **KDT** keyboard has 6 keys as shown in the figure:

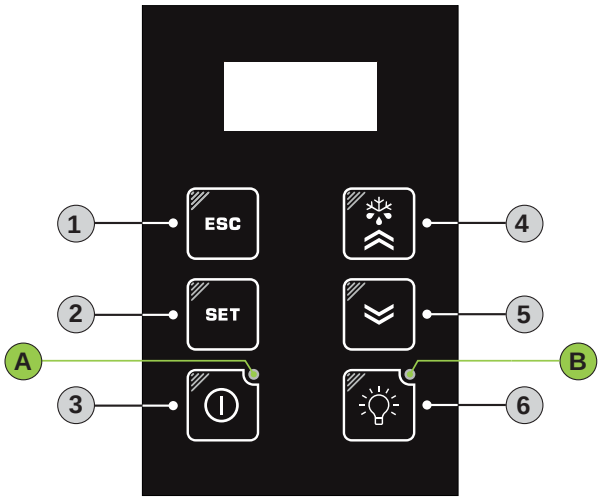

Each key has a different function depending on whether it is:

- pressed and released
- pressed for at least 5 seconds
- pressed and held at Start-up
- pressed in combination with another key.

KEYS

The following table summarises the function of each key:

No	Key	Action		
		Press and release	Press for at least 5 s	Start-up
1	ESC	• Goes back up one level from current menu • Confirms parameter value	Activates the Reduced Set function. (see parameter H33)	---
2	SET	• Displays alarms (if present) • Opens Machine Status menu • Confirms commands	Open programming menu (Parameters, User and Installer)	when pressed during start-up, it enables the user to select the application to be loaded.
3		---	User configurable function (from outside menus). (see parameter H34)	---
4		• Scrolls through menu options • Increases values	Activates the Manual Defrost function (see parameter H31)	---
5		• Scrolls through menu options • Decreases values	User configurable function (see parameter H32)	---
6		Turns light on/off	User configurable function (see parameter H35) **NOTE**: if H33≠0, the key does not switch the light on/off	---
+ ESC		Activates remote display control (keyboard shared on LINK[2])		

LED

The following table summarises the function of each LED:

No	LED	Description	No	LED	Description
A		Device switched off	B		Light relay on from key

6.5. CONNECTIONS RTX 600 /V WITH KEYBOARD AND DISPLAY

Each **RTX 600 /V** can be connected to a single **KDEPlus**, **KDWPlus** or **KDT** keypad and if required to an **ECPlus** display module for remote display by means of the connector located on the keyboard.

RTX 600 /V + KDEPlus + ECPlus CONNECTION

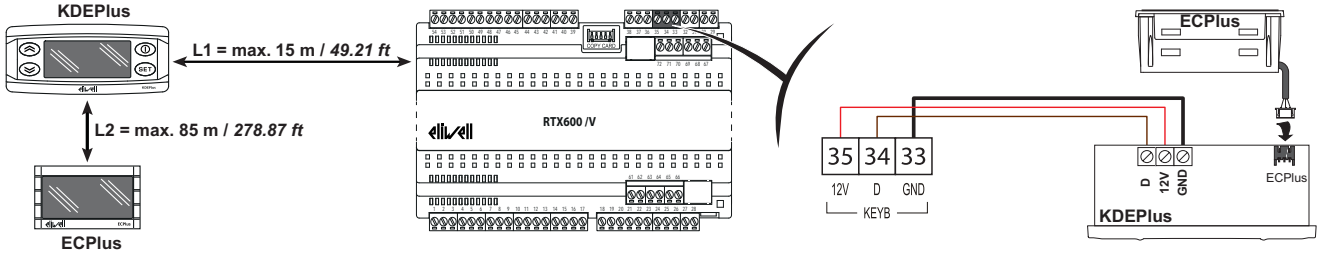

RTX 600 /V + KDWPlus + ECPlus CONNECTION

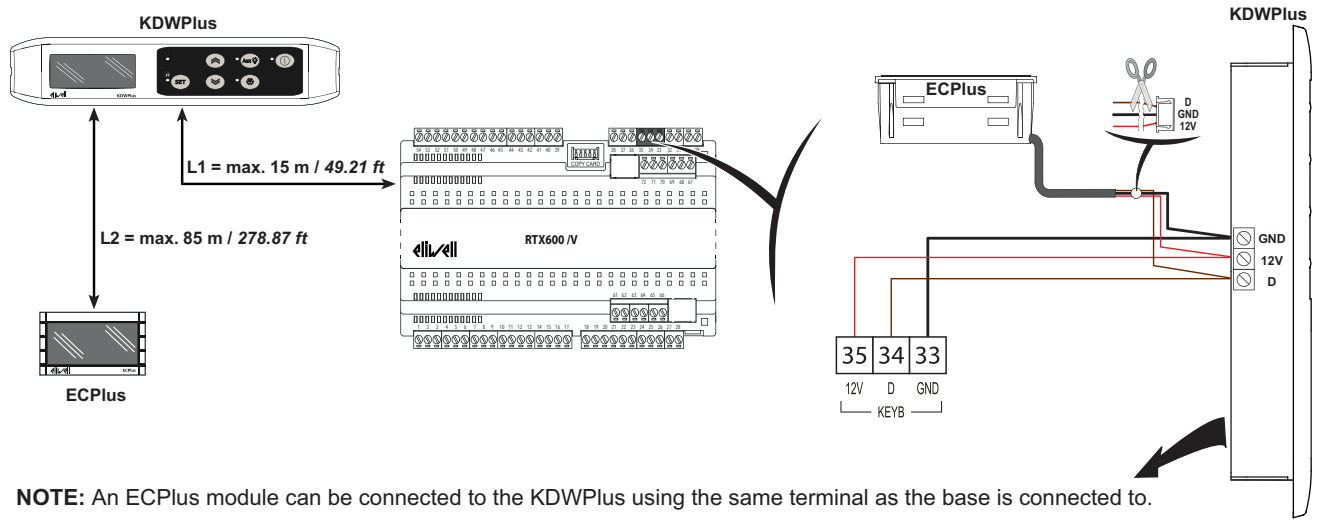

NOTE: An ECPlus module can be connected to the KDWPlus using the same terminal as the base is connected to.

RTX 600 /V + KDT CONNECTION

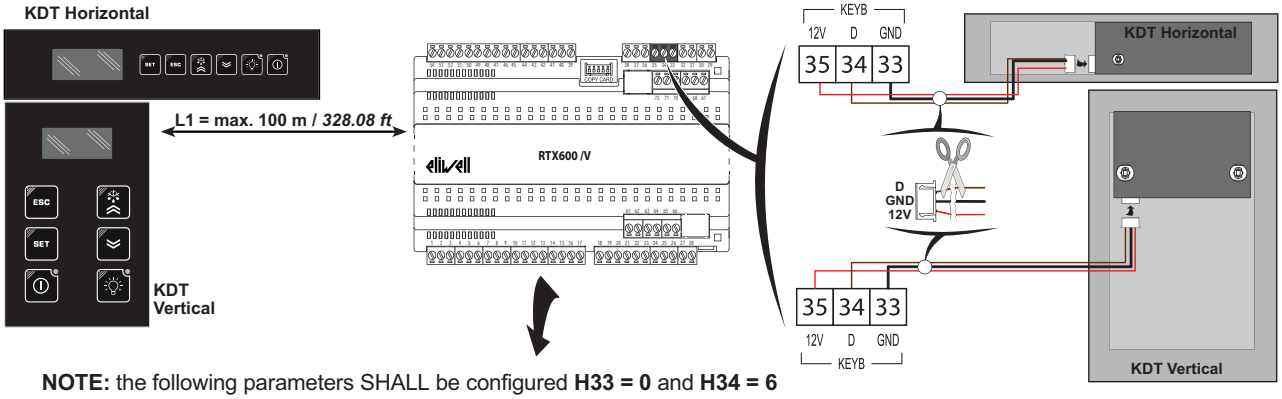

NOTE: the following parameters SHALL be configured **H33 = 0** and **H34 = 6**

RTX 600 /V + ECPlus CONNECTION

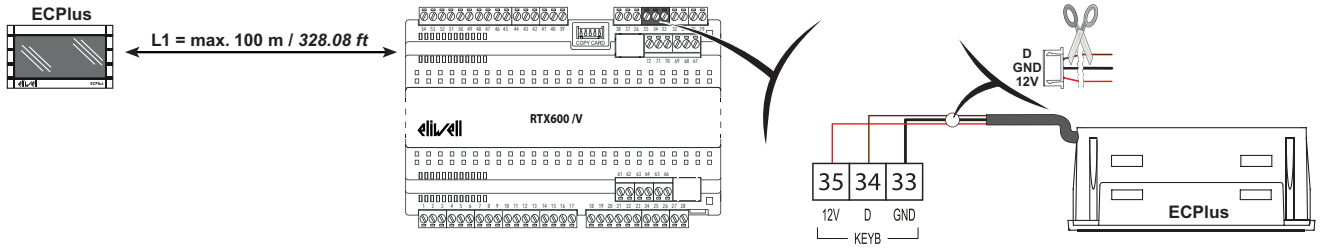

6.6. CONNECTIONS RTD 600 /V WITH KEYBOARD AND DISPLAY

Each **RTD 600 /V** can be connected to a single **KDEPlus**, **KDWPlus** or **KDT** keypad and if required to an **ECPlus** display module for remote display by means of the connector located on the keyboard.

RTD 600 /V + KDEPlus + ECPlus CONNECTION

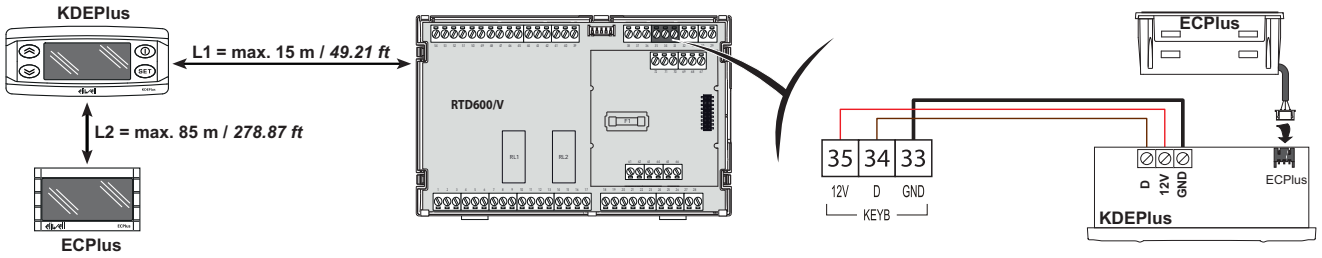

RTD 600 /V + KDWPlus + ECPlus CONNECTION

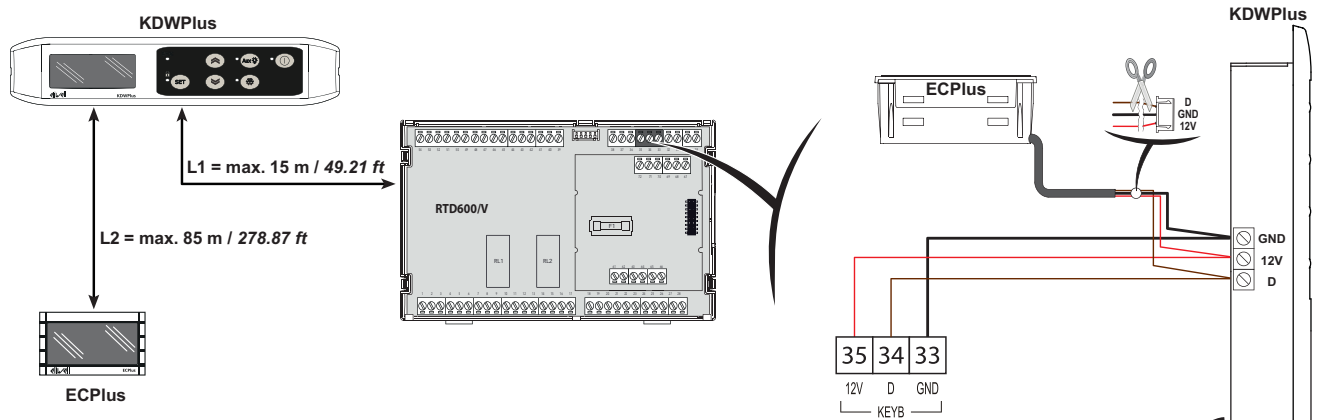

NOTE: An ECPlus module can be connected to the KDWPlus using the same terminal as the base is connected to.

RTD 600 /V + KDT CONNECTION

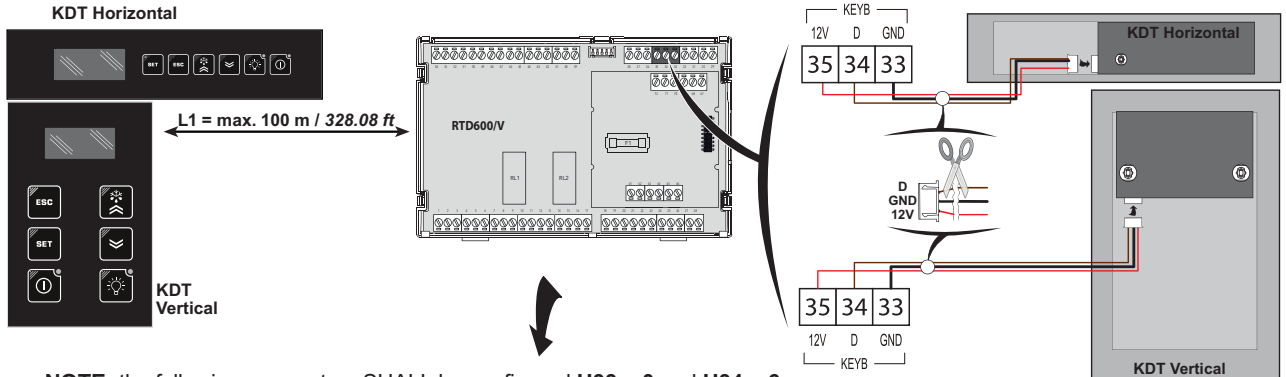

NOTE: the following parameters SHALL be configured **H33 = 0** and **H34 = 6**

RTD 600 /V + ECPlus CONNECTION

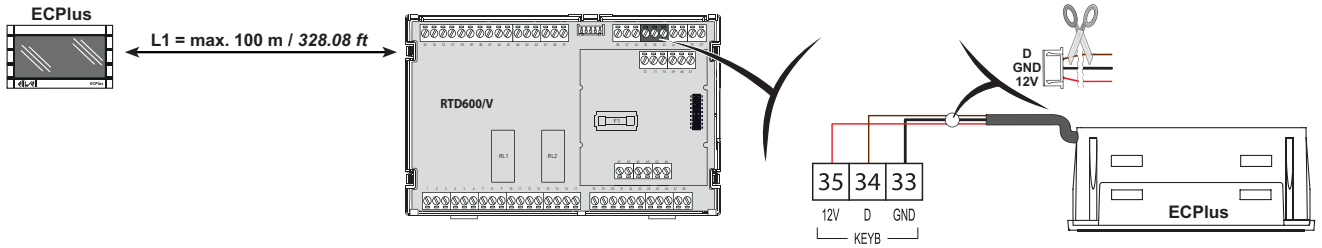

6.7. PRELIMINARY CONFIGURATIONS

After making the electrical connections, simply power up the device to start operation.
At first start-up, Eliwell recommends that you:

1. Select the preset Application that most closely matches your own.
2. Configure the main parameters listed in the USER menu to suit your requirements.
3. Make certain there are no active alarms
   (icon " ((●)) " off and labels E1, E2, E3, E4, E5, E6, E7, EL or Ei not displayed).

6.7.1. Loading default applications

The procedure for loading one of the default applications is:

- When the device is powered up, press and hold the SET key: the label "**AP1**" will appear.
  NOTE: On the **KDT** keyboard, within 30 seconds from the end of the lamp test, press any key for at least 1 s to exit the "stand-by" mode and then press the SET + ⌄⌄ keys together to view label "**AP1**".
- Scroll through the various applications (**AP1** ... **AP8**) using keys ⌃⌃ and ⌄⌄.
- Select the desired application using the SET key or cancel the procedure by pressing the ⏻ key; alternatively wait for the timeout.
- If the operation is successful, the display will show "**yES**", if not it will show "**Err**".
- The device resents and performs the Lamp Test.
- After a few seconds the device will return to the main display.

The loading procedure for the Default Applications restores the factory settings, i.e., restores the default values given in the parameters table with the exception of the parameters which are not in the default applications **AP1**...**AP8** (and which are shown in the "Parameters Table" on a grey background) and which maintain the previously set value. These retained values may not be appropriate and may need to be modified accordingly.

NOTICE
INCORRECT OPERATION OF THE DEVICE Verify all relevant parameters after loading a Default Application. **Failure to follow these instructions can result in equipment damage.**

6.7.2. Default parameter settings

The **RTX-RTD 600 /V** can be used to set the parameters to the default value, by loading one of the default applications (**AP1...AP8**) (see section "LOADING DEFAULT APPLICATIONS").

6.7.3. Setpoint: setting and locking the modification

To display the Setpoint value press the key SET and enter the "Machine Status" menu (**"6.7.7. Machine status menu" on page 58**) and then, when the label "SEt" is displayed press SET again. The Setpoint value appears in the display. To change the Setpoint value, press the ⌃⌃ and ⌄⌄ keys within 15 seconds. Press SET to confirm the modification.
It is possible to disable the keypad on this device.
The keypad can be locked by programming the "LOC" parameter.
With the keypad locked you can still access the "Machine Status" menu by pressing SET to display the Setpoint, but you cannot edit it. To disable the keypad lock, repeat the locking procedure.

6.7.4. Password

Password "**PA1**": allows access to the **User** parameters. By default the password is disabled (**PA1=0**).
To enable (**PA1≠0**): press SET for more than 5 seconds, scroll through the parameters with ⌃ and ⌄ until you see the label **PS1**, press SET to display the value, modify it with ⌃ and ⌄ and press SET or ⏻ to save.
If enabled, it will be required in order to access the User parameters.

Password "**PA2**": allows access to the **Installer** parameters. By default the password is enabled (**PA2=15**).
To modify it (**PA2≠15**): press and hold SET for longer than 5 seconds, scroll through the parameters using ⌃ and ⌄ until you see the label **PA2**, press SET, set the value "15" using ⌃ and ⌄, then confirm using SET. Scroll through the folders until you see the label **diS** and press SET to enter. Scroll through the parameters with ⌃ and ⌄ until you see the label **PS2**, press SET to display the value, modify it using ⌃ and ⌄, then save it by pressing SET or ⏻.

The visibility of '**PA2**' is:

PA1 and **PA2 ≠ 0**: Press SET for more than 5 seconds to view '**PA1**' and '**PA2**'. You can then decide whether to access the '**User**' parameters (**PA1**) or the "**Installer**" parameters (**PA2**).

Otherwise: Password '**PA2**' is amongst the level1 parameters. If enabled, it will be required when accessing the "Installer" parameters; to enter it, proceed as instructed for password "**PA1**".

NOTE: If the value entered is incorrect, label **PA1**/**PA2** will be shown again. Repeat the procedure.

6.7.5. Viewing probe vales

To display the value read by the probes connected to the device, press SET and enter the "Machine Status" menu (**"6.7.7. Machine status menu" on page 58**) and then, when displaying one of the labels relative to probes "Pb1"... "Pb7" then press the SET key again.
The value measured by the associated probe will appear on the display.

NOTE: The displayed value is read-only and cannot be modified.

6.7.6. Key-activated functions

All models have the ⌃ key set to activate the "Manual Defrost" function.
Keys ⌄ and ⏻ can also be set to activate a specific function chosen by the client.
The parameters for configuring the two keys are:

- **H32** = key configuration ⌄ (DOWN)
- **H33** = key configuration ⏻ (ESC)

The values that can be set apply to both keys and the functions that can be activated are:

H32/H33 value	Function enabled
0	disabled
1	defrost
2	reduced set
3	Light
4	energy saving
5	AUX
6	Stand-by
7	quick chill cycle
8	Defrost start/end

6.7.7. Machine status menu

Press and release the SET key to access the “Machine Status” menu.
The various folders of the menu can be scrolled using the ⌃ and ⌄ keys:

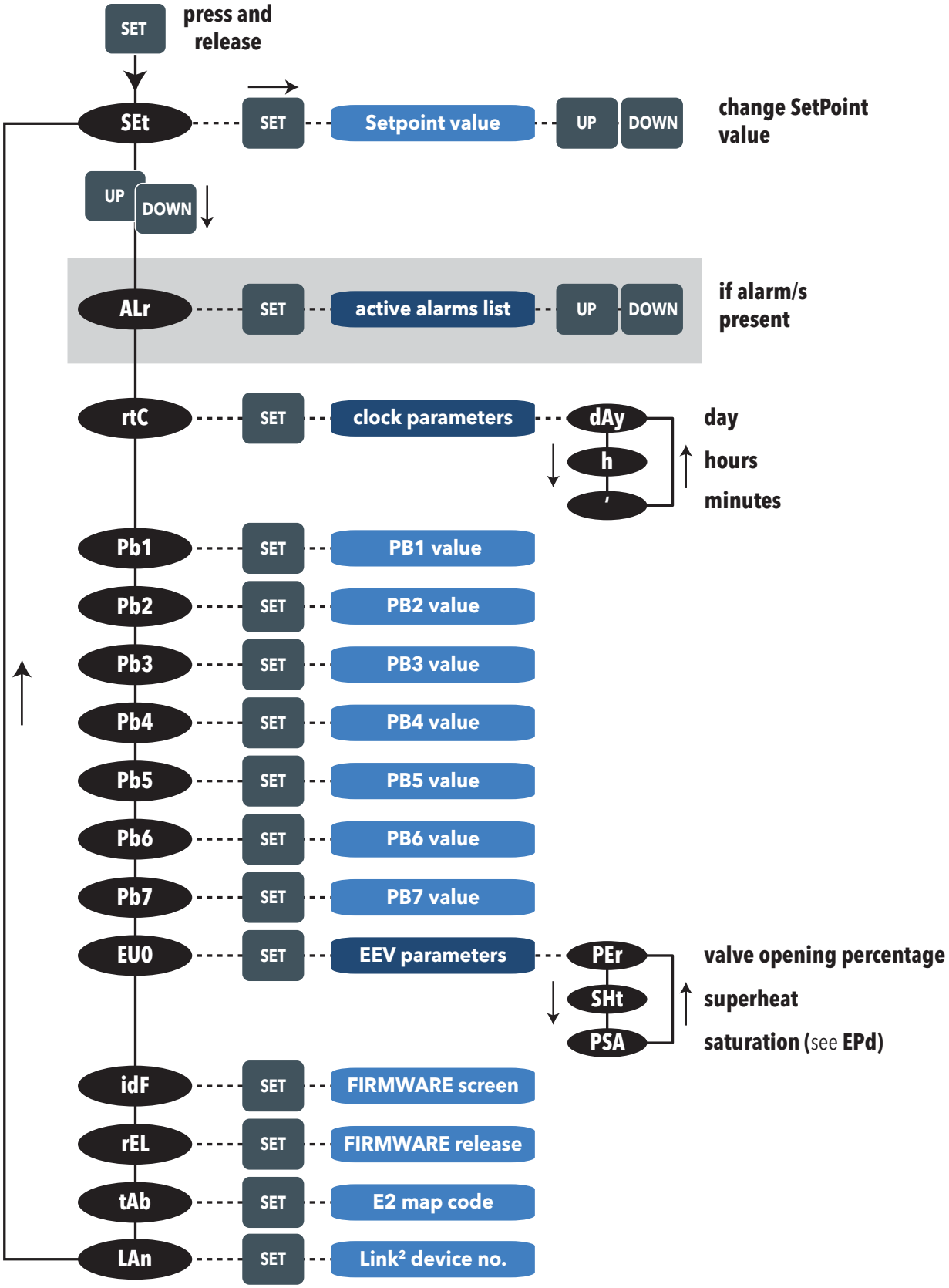

6.7.8. Programming menu

To access the “Programming” menu, press and hold the SET key for at least 5 s. If Password protection is activated, a prompt will appear: enter **PA1** for “**User**” parameters and **PA2** for “**Installer**” parameters (refer to **“6.7.4. Password” on page 57**).

“**User**” parameters: When the menu is accessed, the display will show the first parameter (e.g. “**rE**”). Press ⌃⌃ and ⌄⌄ to scroll through all parameters in the current level. Select the desired parameter by pressing SET. Press ⌃⌃ and ⌄⌄ to edit and SET to save the change.

“**Installer**” parameters: When the menu is accessed, the display will show the first folder (e.g. “**CP**”). Press ⌃⌃ and ⌄⌄ to scroll through the current level folders. Select the desired folder using SET. Press ⌃⌃ and ⌄⌄ to scroll through the parameters in the current folder and select the parameter using SET. Press ⌃⌃ and ⌄⌄ to edit and SET to save the change.

NOTE: Switch the device off and on again whenever you edit the parameter configuration.

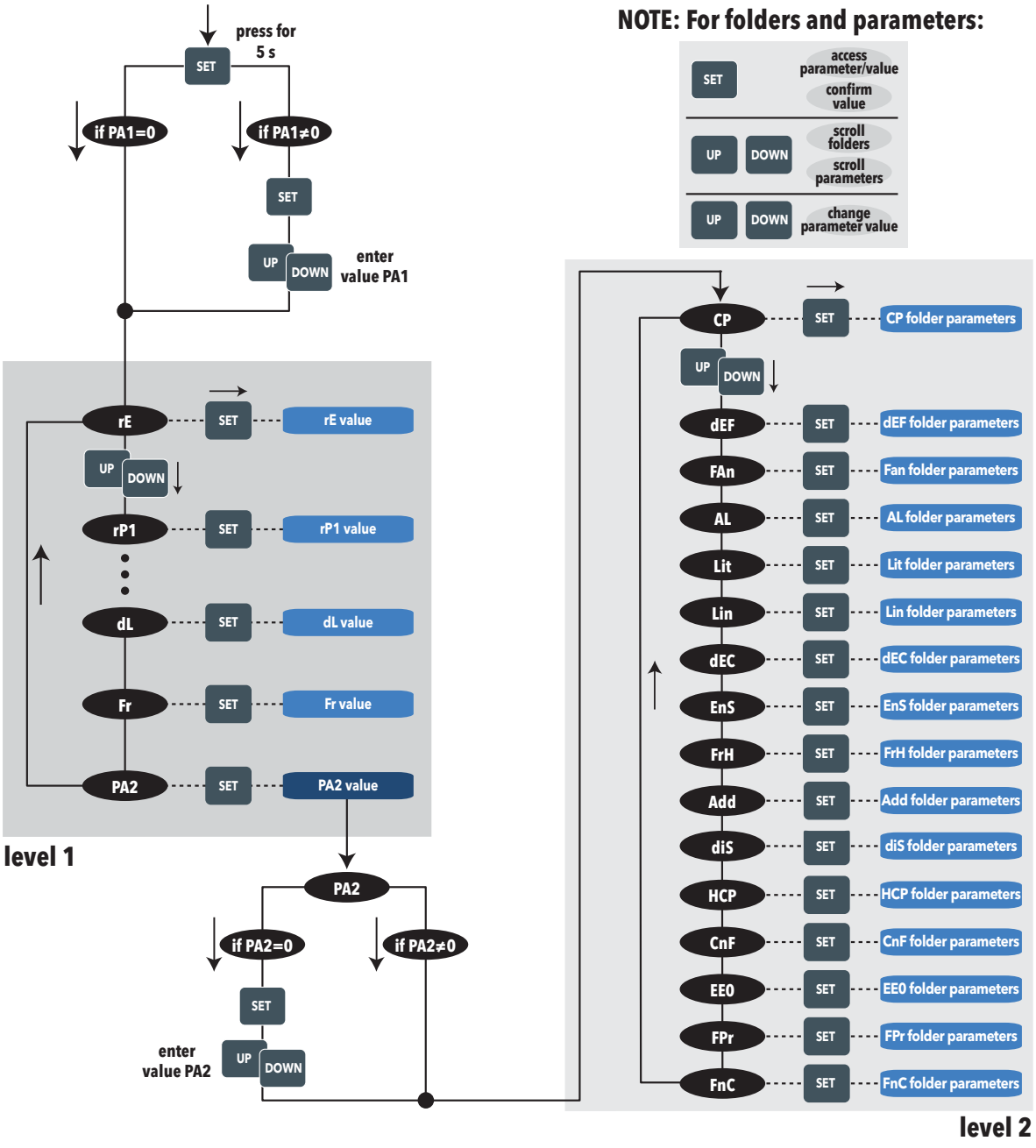

CHAPTER 7
FUNCTIONS

7.1. SETTINGS

7.1.1. Probe setting and calibration

RTX-RTD 600 /V devices have:

- 5 configurable NTC/PTC/Pt1000/DI inputs (**Pb1** ... **Pb5**);
- 1 4...20 mA / DI configurable input (**Pb6**)
- 1 Ratiometric / DI configurable input (**Pb7**)

The temperature probes (**Pb1** ... **Pb5**) must all be of the same type and must be configured using parameter **H00**.

Parameter **H00** is present at User level (**User**) or Installer (**Inst**) level inside the **CnF** folder and is set as follows:

- **H00** = Ptc → if using PTC probes
- **H00** = ntc → if using NTC probes (default)
- **H00** = Pt1 → if using Pt1000 probes

After installation, the values read by the probes can be corrected/calibrated using the following parameters:

- **CA1**: probe 1 offset. Positive or negative value to be added to the value read by Pb1 (Range: **-30.0...30.0**)
- **CA2**: probe 2 offset. Positive or negative value to be added to the value read by Pb2 (Range: **-30.0...30.0**)
- **CA3**: probe 3 offset. Positive or negative value to be added to the value read by Pb3 (Range: **-30.0...30.0**)
- **CA4**: probe 4 offset. Positive or negative value to be added to the value read by Pb4 (Range: **-30.0...30.0**)
- **CA5**: probe 5 offset. Positive or negative value to be added to the value read by Pb5 (Range: **-30.0...30.0**)
- **CA6**: probe 6 offset. Positive or negative value to be added to the value read by Pb6 (Range: **-30.0...30.0**)
- **CA7**: probe 7 offset. Positive or negative value to be added to the value read by Pb7 (Range: **-30.0...30.0**)

7.1.2. Display settings

Inside the **diS** folder at User level (**User**) or at Installer level (**Inst**) you will find the parameters used to set the temperature readout, decimal point usage, unit of measure and display during defrost.

- **ndt**: (**User**) enables/disables decimal point display (with resolution of one-tenth of a degree; e.g.: 10.0 °C). Display with decimal point is only possible within the range of values from -99.9 ... 99.9 °C.
    - **ndt** = yes ➔ displays read values with decimal point (default);
    - **ndt** = no ➔ displays read values without decimal point

    NOTE: enabling/disabling the decimal point only affects the on-screen display of values. The controller will continue to perform calculations with decimal point.
- **ddL**: (**User**) sets the type of display during and up to the end of defrost
    - **ddL** = 0 ➔ displays the probe value (default)
    - **ddL** = 1 ➔ continues to display the value read by the probe at the start of defrosting
    - **ddL** = 2 ➔ displays fixed label "**dEF**" fissa
- **dro**: (**Inst**) sets temperature display to °C or °F.
    - **dro** = C ➔ display in °C (default)
    - **dro** = F ➔ display in °F

    NOTE: switching between °C and °F DOES NOT modify the temperature parameter values (e.g. set=10 °C becomes 10 °F) This means that the maximum and minimum limits of parameters as absolute values are the same for both units of measure and hence the ranges are different.
- **ddd**: (**User**) establishes the value to be shown on the display. All other display and adjustment modes are the same.
    - **ddd** = SP1 ➔ disabled
    - **ddd** = Pb1 ➔ displays the values read by Pb1
    - **ddd** = Pb2 ➔ displays the values read by Pb2
    - **ddd** = Pb3 ➔ displays the values read by Pb3
    - **ddd** = Pb4 ➔ displays the values read by Pb4
    - **ddd** = Pb5 ➔ displays the values read by Pb5
    - **ddd** = Pbi ➔ displays the values read by the virtual probe
    - **ddd** = LP ➔ displays the values read by the remote probe (Link^2)
    - **ddd** = PFi ➔ displays the values read by the filtered virtual probe.

7.2. FUNCTIONS

7.2.1. Upload / Download / Formatting

Description

The UNICARD/Multi Function Key (MFK) is connected to the serial port (TTL) and allows fast programming of device parameters.

NOTE: **DOWNLOAD** from reset operating mode: at power-on, if the UNICARD/MFK is inserted in the device, the controller automatically downloads data.

After connecting the UNICARD/MFK with the device switched off and on completion of the lamp test, one of the following labels will be displayed:

- **dLY** if the operation was successful
- **dLn** if the operation was not successful

After about 5 seconds, the display will display the probe or setpoint value, depending on the default settings.

NOTE: once download has been completed successfully, the device will start to work with the new map loaded.

Operating mode: access "Installer" parameters by entering the password "**PA2**" if enabled (**PA2≠0**), scroll through the folders using ⌃⌃ and ⌄⌄ until the "**FPr**" folder appears. Select it using SET, scroll through the parameters using ⌃⌃ and ⌄⌄ then select one of the functions by pressing SET:

- **UL** (Upload): This function uploads the programming parameters from the device to the card. If the operation is successful, the display will show "**yES**", otherwise it will show "**no**".
- **Fr** (Format): This command is used to format the copy card (which is necessary when using the card for the first time). **NOTE**: The **Fr** parameter deletes all data present and this operation cannot be reversed.
- **dL** (Download): This operation is used to load the programming parameters from the key to the device. If the operation is successful, the display will show "**dLy**", otherwise it will show "**dLn**".
- **Download** (from reset): Connect the UNICARD/MFK with the device switched off. At power-on, data will automatically start downloading from the UNICARD/MFK to the device. At the end of the lamp test, the display will show "**dLy**" if the operation was successful and "**dLn**" if not.

NOTE: before Upload or Download of a map, make confident that there is no communication with the supervisor. This means you should make certain that the RS485 is disconnected from the device or that Supervision system acquisitions have been stopped.

User parameters

The parameters that control this function are:

Label	Description
UL	Transfer programming parameters from device to UNICARD/MFK
Fr	UNICARD/MFK formatting. To erase all data on the Copy Card.
dL	To transfer programming parameters from UNICARD/MFK to device.

MULTI FUNCTION KEY

The Multi Function Key lets you download/upload a parameter map from/to a device.



UNICARD

The UNICARD lets you download/upload a parameter map from/to a device, in the same way as the Multi Function Key (MFK). It is a versatile tool that also allows you to quickly and easily customise devices. It differs from the MFK in the following ways:

1. UNICARD can be connected directly to a computer via USB
2. it can be plugged into a USB socket or USB battery, to power the device directly during upload/download procedures.

The UNICARD can be powered in the following ways:

1) Battery power

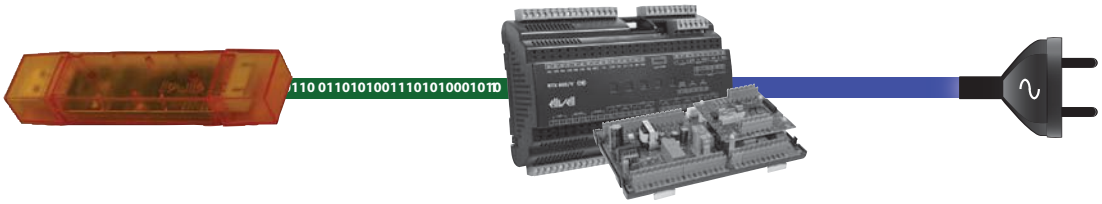

UNICARD | Controller | Controller power supply

2) Field power



USB power supply unit | UNICARD | Controller



USB Battery | UNICARD | Controller

7.2.2. Boot Loader Firmware

The device is equipped with a Boot Loader, so it is possible to update the Firmware directly on site.
Updating may be carried out using UNICARD or MULTI FUNCTION KEY (MFK).

Updating procedure:

- Connect the UNICARD/MFK equipped with the application;
- Power up the device if it is off, otherwise switch it off and on again;
- Wait until the LED of the UNICARD/MFK is blinking (operation in progress);
- The operation will be concluded when the LED of the UNICARD/MFK is:
    - **ON**: operation concluded correctly;
    - **OFF**: operation not performed (application not compatible...)

7.2.3. Keyboard shared on Link²

From each device of a Link² network it is possible, using the local keyboard, to navigate in any one of the other devices connected in the Link².

This menu is activated, from the default menu, by simultaneously holding down the ⩔ and ⓘ keys for 5 seconds. When remote display is active, the 2 icons **°C** and **°F** blink.

You will be asked to enter the modbus address (**Adr**) of the remote device.

To return to the default menu:

- Press the ⩔ and ⓘ keys for 5 seconds;
- By time-out, 60 seconds after a key was last pressed.

During “remote control of the display”, the local keyboard (of the device of which the display has been remote controlled) is blocked. It is released 3 seconds after the release of the viewing of the display.

If the connection is lost during “remote control” viewing, the display will show:

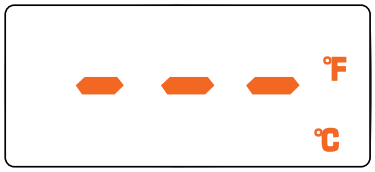

CHAPTER 8
REGULATORS

8.1. PULSE ELECTRONIC EXPANSION VALVE (EEV)

An example of the use of the **RTX-RTD 600 /V** with the different components is given below:

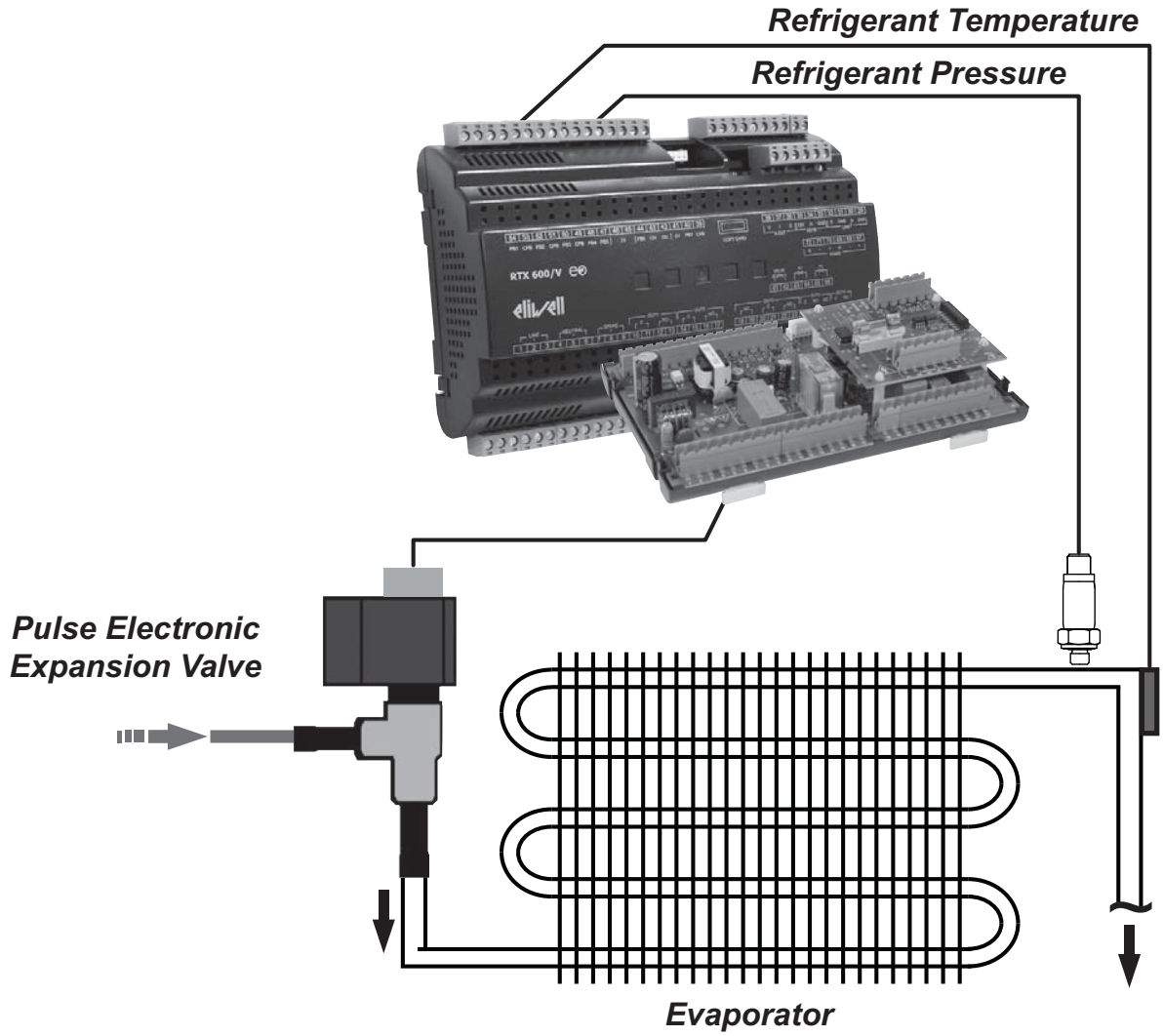

The use of the **EEV** pulse valve requires the configuration of:

- the overheating probe (**rSS** - NTC/PTC/Pt1000 temperature probe)
- the saturation probe (**rSP** - ratiometric transducer or pressure transducer 4...20 mA).

The **DEFAULT** configuration requires the following settings:

- **Pb5** as overheating probe (NTC probe)
- **Pb6** as saturation probe (pressure transducer 4...20 mA).

Take extra care when wiring the valve.
Select the valve coil with care, as appropriate, according to the voltage utilized.

⚠ WARNING

INCORRECT OPERATION OF THE DEVICE

Verify the valve parameters declared by the manufacturer before using the valve in generic valve configuration.

Failure to follow these instructions can result in death, serious injury, or equipment damage.

Schneider Electric and Eliwell are not liable for the data provided by the valve manufacturer, including any technical modifications or updates. Consult the product manual and the valve manual to verify the suitability and correct configuration.

8.1.1. List of compatible / pilotable valves

The list of PULSE valves **COMPATIBLE** with the **RTX-RTD 600 /V** is:

Brand	Valve model	Notes
Eliwell by Schneider Electric	PXV	Orifices from 0,5 to 2,7 mm

The list of PULSE valves **PILOTABLE** with the **RTX-RTD 600 /V** and the reference documents used for tests are:

Brand	Valve model	Reference document
Danfoss	AKV10	DKRCC.PD.VA1.A7.02_AKV_sw.pdf
Danfoss	AKV15	
Danfoss	AKV20	
Danfoss	AKVA (NH3)	DKRCC.PD.VA1.B5.02_AKVA.pdf
Alco	EX2	EN_EX2__35016.pdf

For all not listed valves, contact Eliwell to verify if they are pilotable.

Schneider Electric and Eliwell are not liable for the data provided by the valve manufacturer, including any technical modifications or updates. Consult the product manual and the valve manual to verify the suitability and correct configuration.

8.1.2. Valve type

The **RTX-RTD 600 /V** device is configured to control AC and DC-type 'Pulse' valves.
The connection diagrams are as follows:

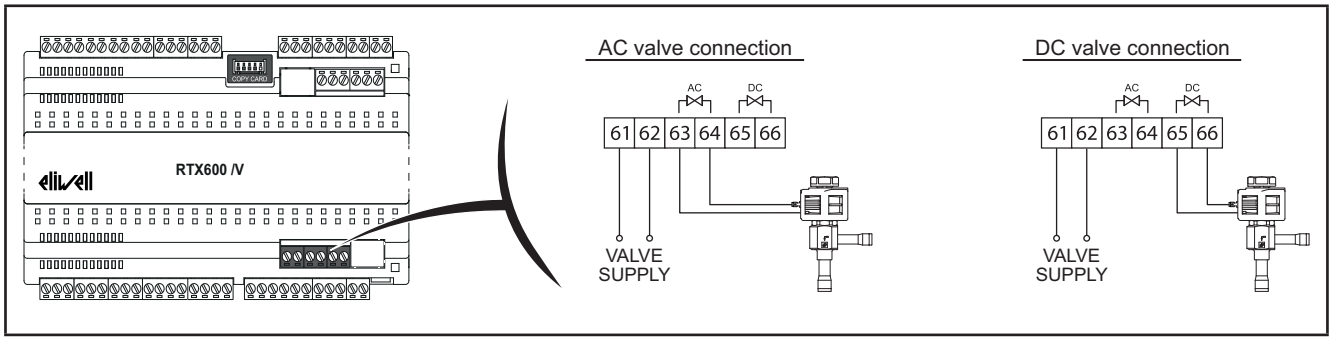

Fig. 40. RTX 600 /V: Connection diagram

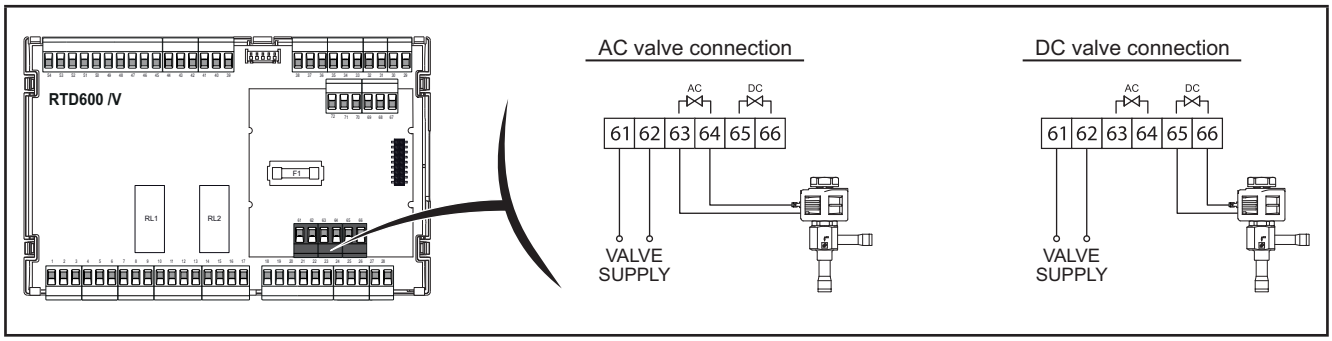

Fig. 41. RTD 600 /V: Connection diagram

Before connecting the valve, carefully configure the **RTX-RTD 600 /V** selecting the type of valve from the list of compatible/pilotable valves.

Schneider Electric and Eliwell are not liable for the data provided by the valve manufacturer, including any technical modifications or updates. Consult the product manual and the valve manual to verify the suitability and correct configuration.

NOTICE

INOPERABLE DEVICE

- Verify all wiring before switching on the electrical power.
- Verify the plate data before connecting the valve.
- Ensure to connect the valve coil to the right terminals of the device. The AC valve coil on terminals 63-64 or the DC valve coil on terminals 65-66.
- Connect the terminals 61-62 to an AC power source rated at RMS voltage value, equal to the RMS voltage value required by the coil in case of AC valve connected, or equal to the DC voltage value required by the coil in case of a DC valve connected (for example to drive a valve with a 240 Vdc coil, it must be applied an AC RMS voltage value of 240 Vac to the terminals 61-62).

Failure to follow these instructions can result in equipment damage.

8.1.3. Coolant type

This device has been designed to operate outside of any dangerous location, and exclusive of applications that generate, or have the potential to generate, hazardous atmospheres. Only install this device in zones and application known to be free, at all times, of hazardous atmospheres.

⚠ DANGER

POTENTIAL FOR EXPLOSION

- Install and use this device in non-hazardous locations only.
- Do not install and use this equipment in applications capable of generating hazardous atmospheres, such as those applications employing flammable refrigerants.

Failure to follow these instructions will result in death or serious injury.

For information concerning the use of control equipment in applications capable of generating hazardous materials, consult your local, regional or national standards bureau or certification agency.

RTX-RTD 600 /V can work with one of the following coolants, already included in the device:

PARA.	DESCRIPTION	M.U.	APPLICATIONS
Ert	Selects the type of refrigerant used: **404** (0) = R404A; **r22** (1) = R22; **410** (2) = R410A; **134** (3) = R134a; **744** (4) = R744 (CO_2); **507** (5) = R507A; **717** (6) = R717 (NH_3); **290** (7) = reserved; **PAr** (8) = refrigerant parameterizable; **407** (9) = R407A; **448** (10) = R448A; **449** (11) = R449A; **450** (12) = R450; **513** (13) = R513A.	num	410 **(DEFAULT)**

NOTE: the Ert parameter is not entered in Applications **AP1** ... **AP8** and does not change if the default values are reset or if a different Application from the default one is loaded.

If a coolant not included in the list has to be used, the “coolant descriptor” can be uploaded (including the key values of the coolant used) via UNICARD/MFK and then set the parameter **Ert** = 8.

NOTE: To obtain the “coolant descriptor” contact the Eliwell technical support department.

8.1.4. Local pressure transducer (4..20 mA)

The pressure transducer connection diagram is as follows:

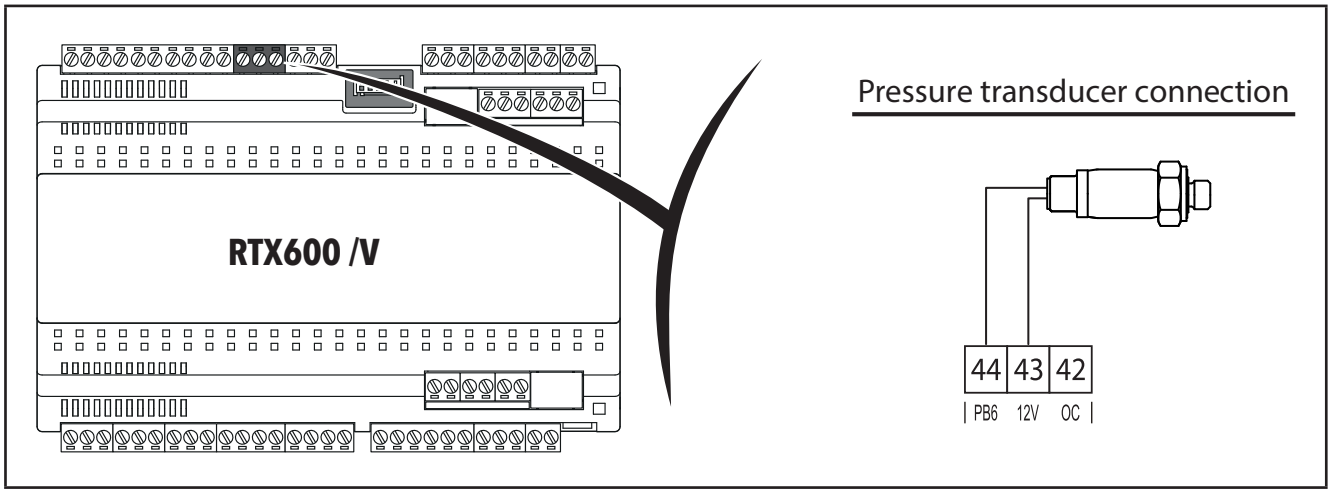

Fig. 42. RTX 600 /V: Connection diagram of pressure transducer 4...20 mA

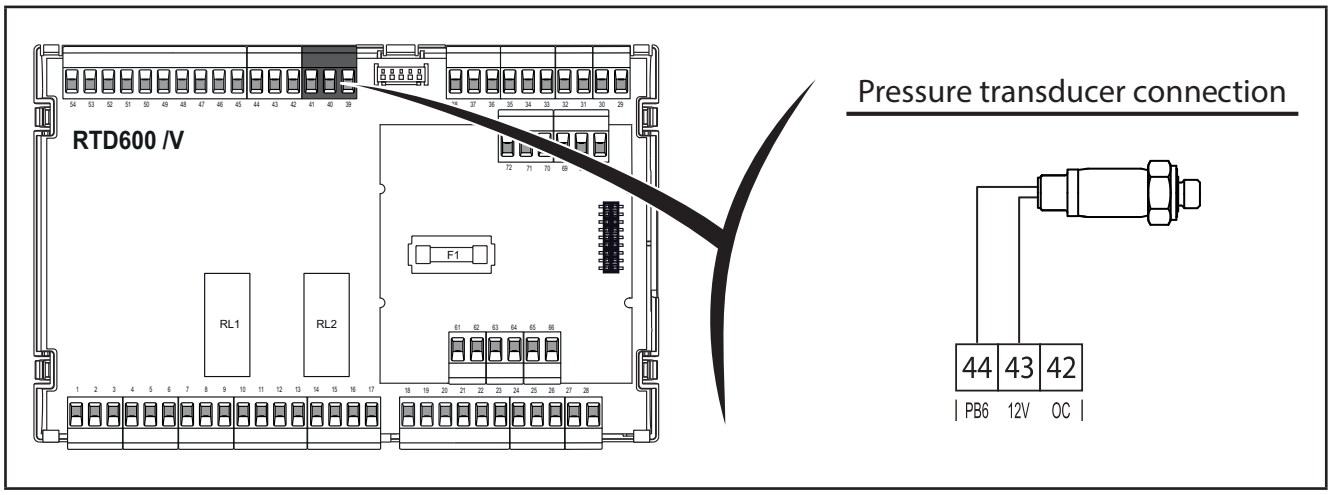

Fig. 43. RTD 600 /V: Connection diagram of pressure transducer 4...20 mA

To use the input 4..20 mA (Pb6) as a saturation probe, set the parameter **rSP** = Pb6.
Via parameters **H03** and **H04** it is possible to set the lower limit (to 4 mA) and the upper limit (to 20 mA).

NOTE: Parameters **H03** and **H04** refer to the relative pressure (atmospheric pressure → 0.0).

8.1.5. Local ratiometric transducer

The ratiometric transducer connection diagram is as follows:

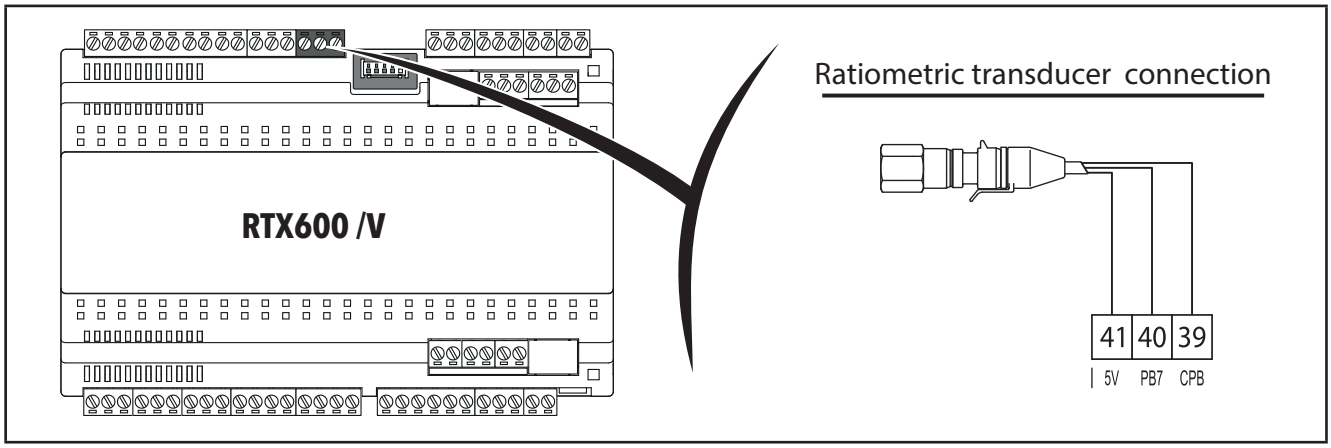

Fig. 44. RTX 600 /V: Connection diagram of ratiometric transducer

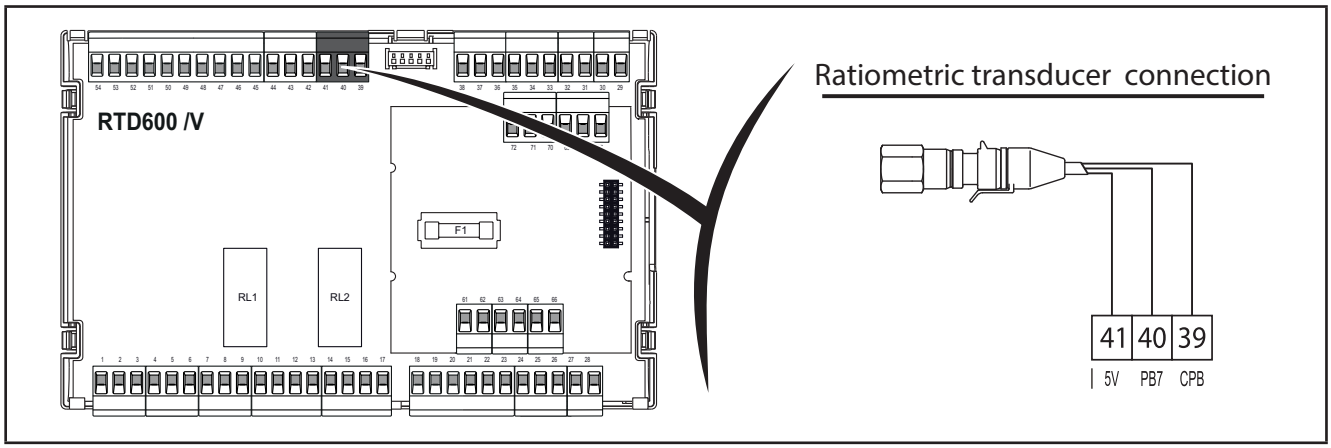

Fig. 45. RTD 600 /V: Connection diagram of ratiometric transducer

To use the ratiometric input (Pb7) as a saturation probe, set the parameter **rSP** = Pb7.
Via parameter **trA** it is possible to select one of the 8 presets, corresponding to the most commonly used ratiometric transducers:

PAR.	DESCRIPTION	M.U.	APPLICATIONS
trA	Selects the model of ratiometric transducer used: **USE** = Generic Probe Settable by the customer **rA1** = EWPA 010 R 0/5V 0/10 BAR FEMALE **rA2** = EWPA 030 R 0/5V 0/30 BAR FEMALE **rA3** = EWPA 050 R 0/5V 0/50 BAR FEMALE **rA4** = AKS 32R -1/6 **rA5** = AKS 32R -1/12 **rA6** = AKS 32R -1/20 **rA7** = AKS 32R -1/34 **rA8** = reserved	num	rA1 (**DEFAULT**)

When using a ratiometric transducer not contemplated in the preset, it can be configured manually by setting the parameter **trA** = "**USE**".

At this point you need to set:

- the lower probe limit, corresponding to 0.5 V (10%) via parameter **H05**
- the upper probe limit, corresponding to 4.5 V (90%) via parameter **H06**

8.1.6. Shared ratiometric transducer (shared via hardware)

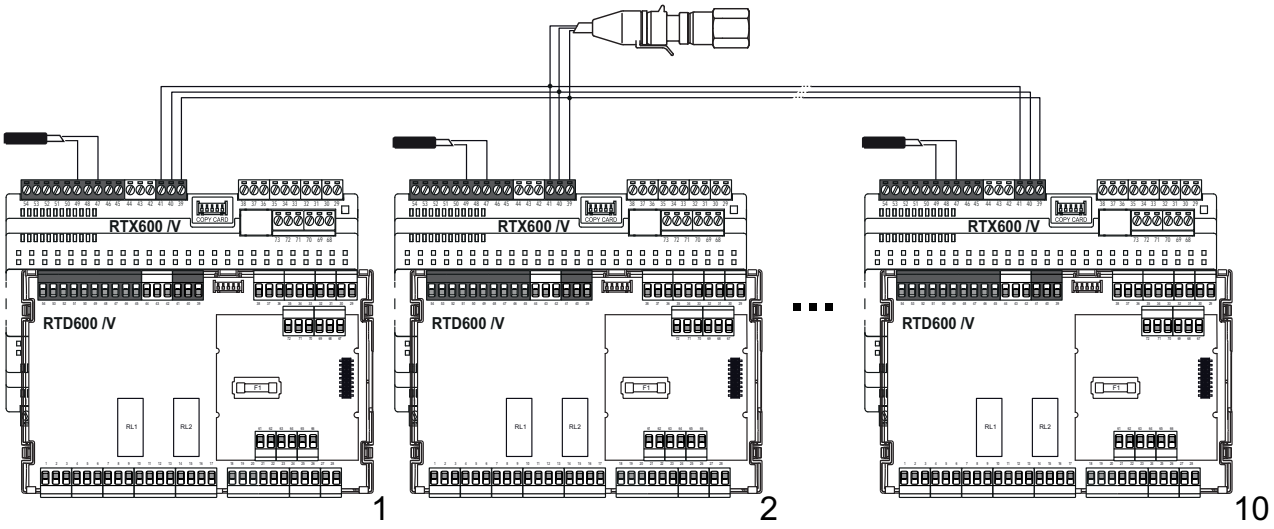

The ratiometric input is configured exactly as described for the non-shared “local ratiometric transducer”.
To use a shared ratiometric transducer (Pb7), set parameter **rSP** = rP.

8.1.7. Sharing the pressure/ratiometric transducer via Link²

When connecting devices in Link², one or two saturation sensors can be connected and their value shared.

EXAMPLE 1

Sharing a single saturation probe:

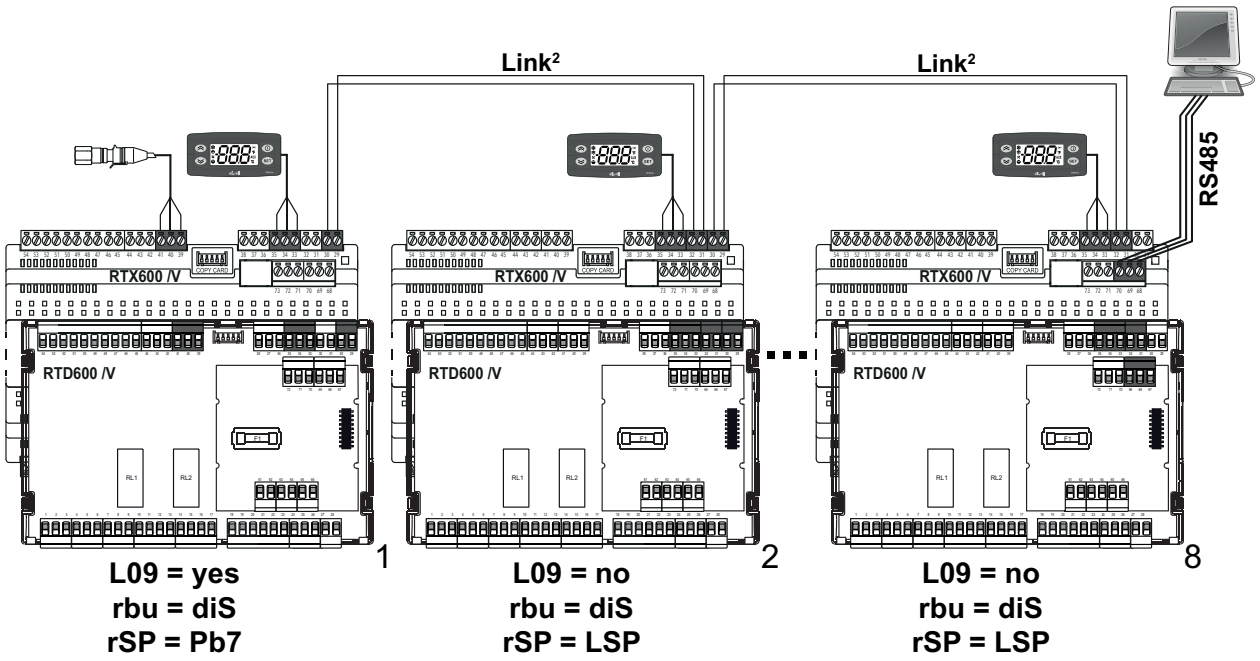

Update the saturation probe sent from the supervision system with a period below 3 minutes otherwise a probe error will be given. In the event of a probe error, all devices will regulate according to what configured with the probe error parameters.

In the event of no-link, all devices in the Link², which are not able to receive the value from the device mounting the probe, will behave as with a saturation probe error.

EXAMPLE 2

To increase the reliability of the system, in the event of a pressure transducer error, two saturation probes linked to two separate Link² cards can be used.

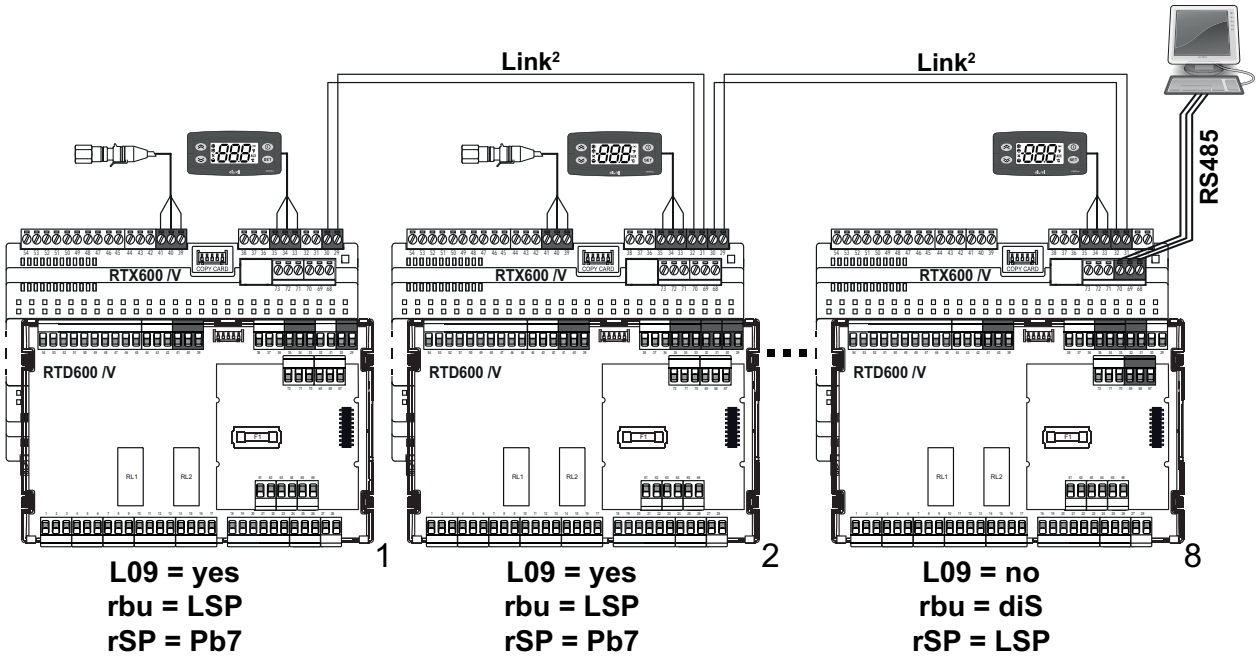

The Link² will automatically share one of the two available values (the first value received by Link²).
The other device, with a pressure transducer, will not use the shared value but the local value, unless this is in error, in which case it will use the shared value.
If the pressure transducer, used for sharing, is in error, the Link² will automatically share the pressure value of the other transducer (provided this is not in error)
If both saturation probes are in error, or there is a no-link condition, the cards will regulate according to the case of a saturation probe in error.

8.1.8. Backup saturation probe from remote

Using serial commands it is possible to send a backup saturation value.
If the device has no valid saturation value (local or shared) it can use the backup saturation value from remote.
If the remote device do not update the value within 3 minutes, the **RTX-RTD 600 /V** will consider the backup probe to be unavailable, and will regulate according to the case of a saturation probe in error.

8.1.9. Overheating probe

Place the superheat probe, the type of which (NTC, PTC or Pt1000) can be selected via parameter **H00**, as shown in the figure:

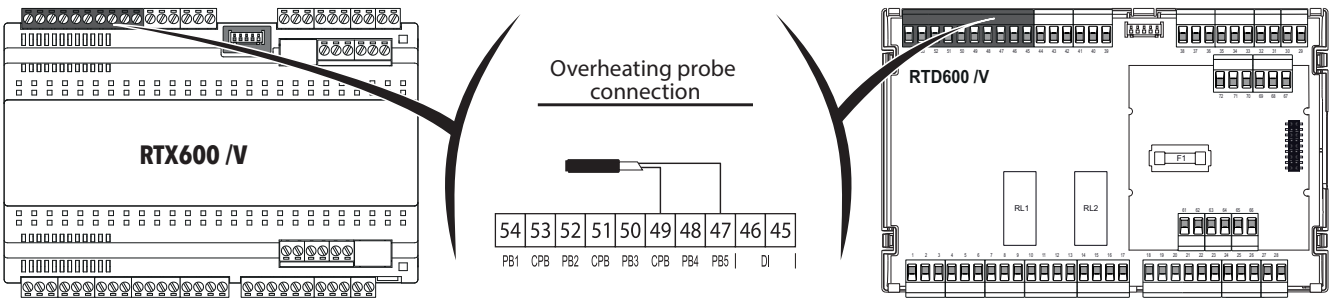

8.1.10. Safety fuse

The device has an internal safety fuse which protects the valve coils.

If the fuse blows it must be replaced.

⚠ ⚠ DANGER

HAZARD OF ELECTRIC SHOCK, EXPLOSION OR ELECTRIC ARC

- Disconnect all power from all devices including connected devices, prior to removing any covers or doors, or installing or removing any accessories, hardware, cables, or wires.
- Always use a properly rated voltage sensing device to confirm the power is off where and when indicated.
- Replace and secure all covers, accessories, hardware, cables and wires.
- Verify the earthing connections on all earthed devices.

Failure to follow these instructions will result in death or serious injury.

⚠ DANGER

RISK OF OVERHEATING AND FIRE

Replace the fuse with a new one with the same characteristics as the one replaced.
For characteristics, refer to the section: ‘Environmental and electrical characteristics’ in the present document.

Failure to follow these instructions will result in death or serious injury.

When handling the equipment use caution to avoid damage caused by electrostatic discharge.

In particular the unshielded connectors and in certain cases the open circuit boards are extremely vulnerable to electrostatic discharge.

⚠ WARNING

INCORRECT OPERATION OF EQUIPMENT DUE TO ELECTROSTATIC DISCHARGE

- Keep the device in the protective packaging until ready for installation.
- The device must only be installed in type-approved cabinets and/or in points that prevent accidental access and provide protection from electrostatic discharge.
- When handling sensitive equipment, use a earthed protective device against electrostatic discharge.
- Before handling the device, always discharge the static electricity from the body by touching an earthed surface or type-approved antistatic mat.

Failure to follow these instructions can result in death, serious injury, or equipment damage.

RTX 600 /V: Replacing the fuse:

To replace the fuse, having switched the power off to all the equipment, proceed as follows:

1. Disconnect all terminals from the Upper Board (electronic expansion valve, RS485 network). Remove the cap by pressing the tabs on both sides with a screwdriver.
2. Remove the fuse to be replaced from the Upper Board.
3. Insert the new fuse (**NOTE**: verify it is the correct size).
4. Replace the cap by pressing down on both side tabs until you hear a “Click”
5. Reconnect all the terminals on the Upper Board.

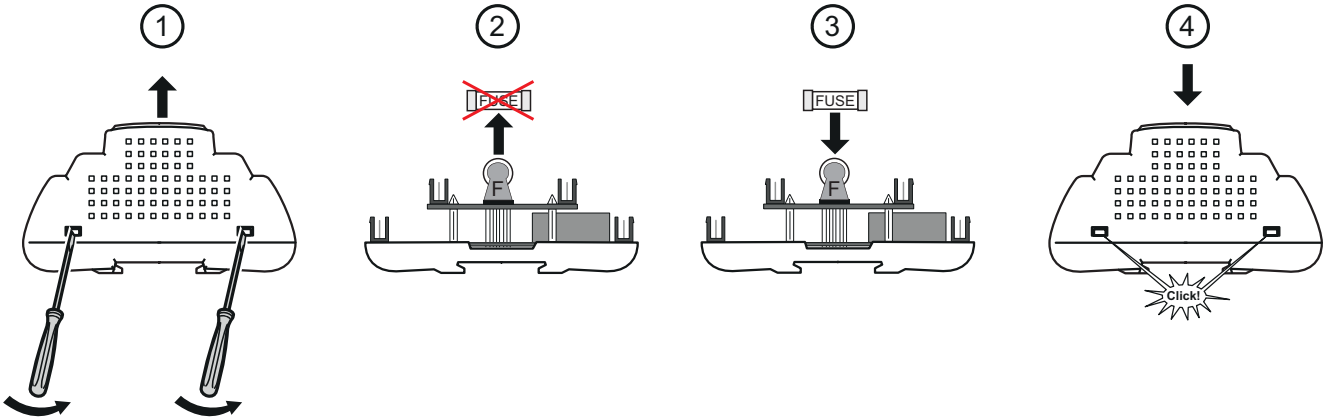

RTD 600 /V: Replacing the fuse:

To replace the fuse, having switched the power off to all the equipment, proceed as follows:

1. Remove the fuse to be replaced from the Upper Board.
2. Insert the new fuse (**NOTE**: verify it is the correct size).



8.1.11. Valve regulation parameters

RTX-RTD 600 /V is a PULSE type electronic expansion valve that regulators the minimum overheating value at the evaporator output.

It is designed for simple installation and the control algorithm is able to adapt to the cabinet conditions to make certain the performance required by the user.

The user is required to set only the setpoint temperature (**OLt**) and the algorithm will adapt to reach the required performance. The algorithm is optimised to work with low overheating setpoints, using predictive calculation models.

The internal driver has user configurations which can be used to set:

- **U01**: the modulation cycle time (the total valve opening/closing times);
- **U02**: the maximum valve opening;
- **U06**: the minimum value in valve opening percentage for modulation;
- **U07**: the maximum value of valve opening in percentage for modulation.

If the regulation requires a value lower than **U06** the valve opening will be 0%, while if he regulation requires an opening value of more than **U07** the valve will be opened to the value **U02**.

NOTES:

- If the regulator controls an output of more than or equal to **U07**, the actual output is equal to **U02**.
- If the regulator controls an output of less than or equal to **U06**, the actual output is equal to 0.
- If the regulator controls an output of more than or equal to **U07**, for more than the time set in **U05** a maximum opening alarm dA07 is generated to indicate an hazardous system situation.

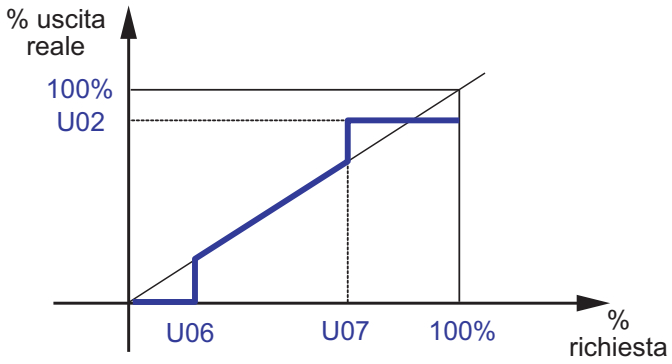

8.1.12. PID overheating regulator and MOP

PID regulator (H60)

RTX-RTD 600 /V calculates the actual overheating value using the two analogue overheating and saturation probes. A PID automatic controller modulates the valve opening so make the overheating reach the setpoint **OLt**. The algorithm is dynamic: the effective overheating value may not reach the set Setpoint or may temporarily fall below this value. If this results in the egress of liquid from the evaporator, increase the Setpoint **OLt**.

MOP regulator (Maximum Operating Pressure)

The driver has a “maximum operating pressure MOP” control function enabled via parameter **HOE**. This function controls the valve closing in a proportional manner as the saturation temperature gets near the value of parameter **HOt** (maximum evaporator temperature threshold) with a proportional band equal to parameter **HPb**.
Above this threshold for more than time **tAP**, a MOP alarm is triggered.

The **MOP** regulation can be disabled:
- via parameter **HOE**.
- when the device is powered up or when returning from a defrost condition, for a time equal to **HdP**.

8.1.13. Regulation in the event of a probe error

In the event of a saturation probe not working (pressure **4...20 mA** or **ratiometric** transducer):
- the output will be modulated with the percentage set in parameter **U08**.

In the event of an overheating probe not working (**NTC, PTC or Pt1000**):
- MOP disabled: the output will be modulated with the fixed percentage set by parameter **U08**
- MOP enabled: the output will be modulated with an opening percentage between 0 and **U08**.

User parameters

The parameters that manage this regulator are:

Label	Description
L09	Enables sharing of saturation (pressure) probe.
trA	Selects the type of ratiometric transducer used.
H00	Selects the type of temperature probes connected (ntc = NTC, Ptc = PTC and Pt1 = Pt1000)
H03	Lower limit of pressure transducer 4-20 mA
H04	Upper limit of pressure transducer 4-20 mA
H05	Lower limit of ratiometric transducer.
H06	Upper limit of ratiometric transducer.
H60	Displays the selected application.
rSP	Selects the saturation probe used.
rSS	Selects the overheating probe used.
rbu	Selects the back-up saturation probe.
EPd	Saturation value display mode (t = temperature and P = pressure).
Ert	Selects the type of refrigerant used.
U01	PWM period.
U02	Maximum valve opening percentage.
U05	Operating time at max opening for alarm signal.
U06	Minimum useful valve opening percentage.
U07	Maximum valve useful opening percentage.
U08	Valve opening percentage during probe error.
OLt	Sets the minimum overheating threshold
HOE	Enable MOP.
tAP	Min time that temp upper threshold is exceeded for alarm activation.
HOt	Evaporator temperature upper threshold.
HdP	MOP disable time at start-up.

8.2. LINK² NETWORK

It is possible to connect up to a maximum of 8 **RTX-RTD 600 /V** devices in a Link² local network and to connect only one device to the Modbus monitoring network.

The Link² is configured using the same addresses as the supervision system.

There is no limit to the addresses (they may also be non-adjacent) and there is no Master device.

The supervision may be connected to a single device belonging to a Link², which acts as a gateway for the other devices connected on the local network.

Each device will make available to the network information on the devices connected in the local network.

See the example connection Link² + Monitoring network below:

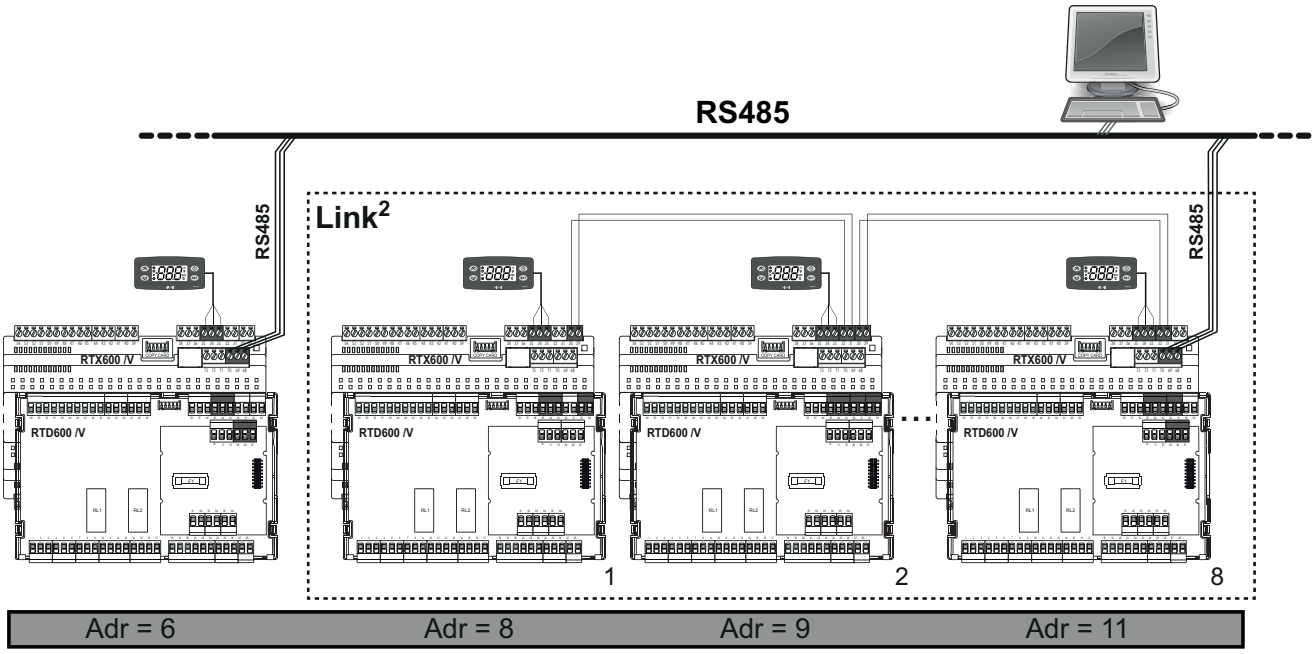

8.2.1. Supervision gateway

Via the Link² network it is possible to simplify the supervision wiring.

More specifically, the **RS485** supervision line can be connected to any of the Link² cards.

The latter will automatically “sort” the communications to other cards.

The **RS485** does not require any specific configuration for the addresses as it uses those already set for the network supervision which use the parameter **Adr**.

8.2.2. Sharing the temperature probe

Via the Link[2] network it is possible to share one of the 5 temperature probes (Pb1…Pb5) or the virtual probe.

EXAMPLE 1

An example of regulation probe sharing (in the example the probe is connected to device 2)

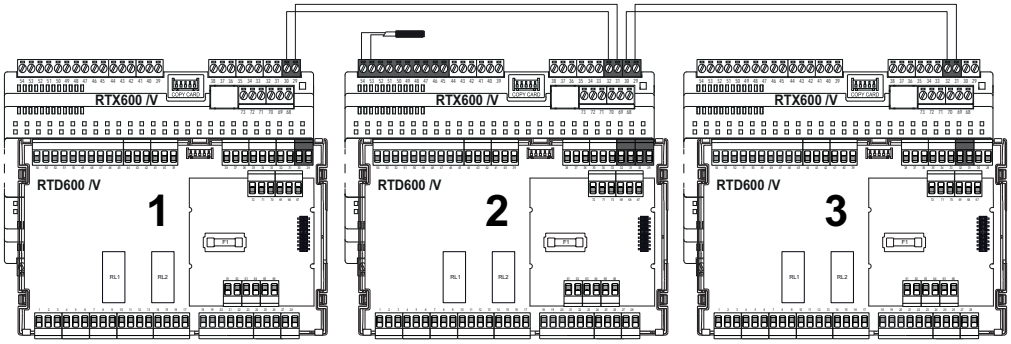

EXAMPLE 2

One example of sharing may be when a remote cabinet, where every section is equipped with its own regulation probe, one of the regulation probes is not working (in the example the probe on device 2 is the one indicated with a red X). In this case it is possible to control this section via the value read by one of the adjacent sections.
This operation can be done directly from remote:

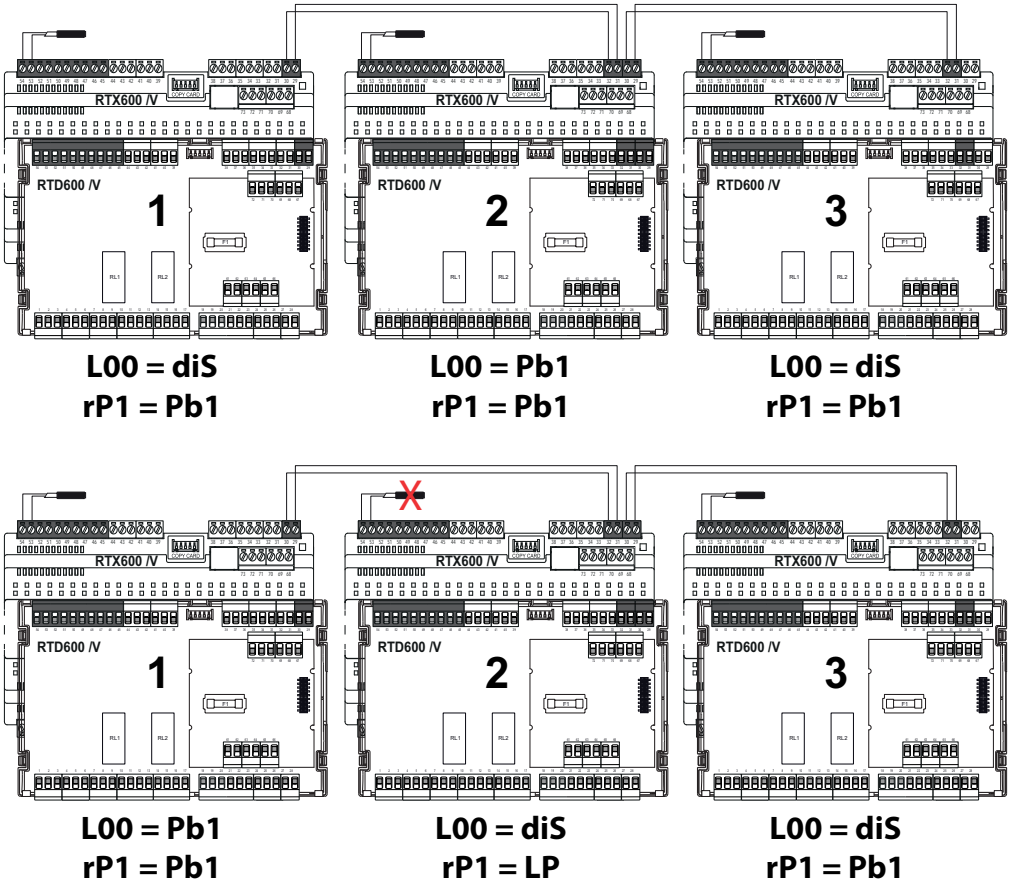

NOTE: The sharing of the temperature probe is valid not only for regulation but also for other regulators (evaporator fans, heaters, etc.).

8.2.3. Defrost

Via the Link² network it is possible to coordinate the defrosts among the various devices in the network.

The coordination is done by setting parameter **L03 = 1** in the device which coordinate the defrost.

Via the parameter it is possible to indicate if, after defrost, the device will wait for all to have finished before re-activating the regulation. In this way a time-out is in any case present (parameter **L10**) which forces the regulation to be reactivated if, within this time, the device which coordinates has not reactivated the regulation (e.g. the line on the Link² network was interrupted during a defrost in progress).

EXAMPLE 1

Below it is shown how to configure a simultaneous defrost, with a resource lock.
The coordinating device is device 1. The value **x** for **L10** represents the number of minutes delay set while **dE1**/**dE2** represent the defrost time-out determined by the coordinating device.

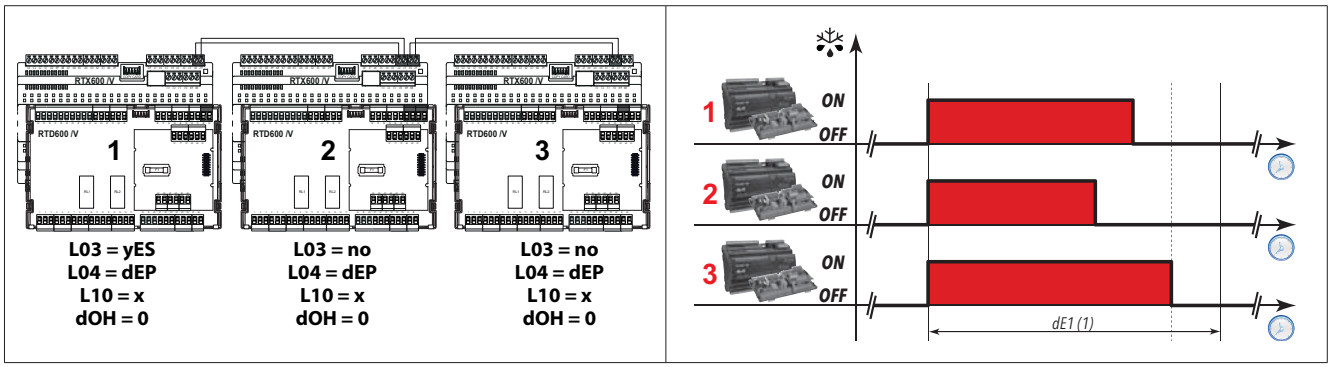

NOTE: When the parameter **L04 = dEP**, it is advised to remove all other active defrosts.
In this situation parameter **L10** is used.

EXAMPLE 2

To run a sequential defrost, simply set parameter **dOH** to activate the defrosts sequentially (in the following example a 30 minute time-out after defrost is hypothesised):

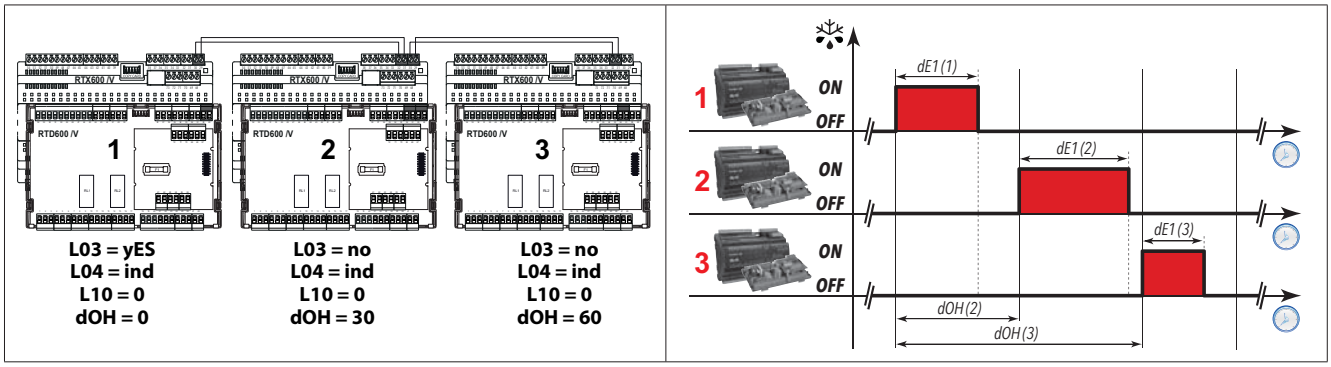

NOTE: In this situation parameter **L10** is not used even if its value is **L10 > 0**.

The devices can implement a protection mechanism if the communication via the Link² network, with the device coordinating the defrosts, is dropped.
This is done by setting the local defrost mode at equipment hours, setting the value of parameter **dit** higher than the maximum time interval between two consecutive defrosts which can be sent by the coordinating device.
Each time the device receives a defrost request from the coordinator it resets the timer **dit**.
If the device receives no defrost command, after a time equal to **dit**, a defrost will be activated automatically and the timer **dit** will be reset and will start again from 0.

The example below shows **Master** as the device coordinating the defrosts and **Slave** is one of any of the other devices in the network.
Box "A" identifies the time in which the **Slave** device lost communication with the **Master**.

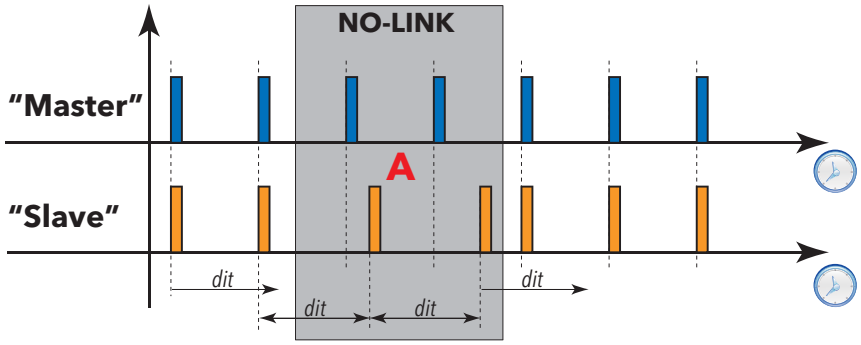

NOTES:
1. To work correctly, set **dit >** maximum interval between 2 subsequent defrosts of the device configured as Master for the defrost.
2. If **dit = 0**, if there is a request from the device configured as Master, the Slaves will defrost while, if the network drops the communication, no defrost will be run.

8.2.4. Shared display

To make certain that all the remote cabinet keyboards display the same value, it is possible to share the display of a given device via the Link[2] network.

EXAMPLE

In the following example all the keyboards will display the value of device 2.
Devices 1 and 3 will display the value of the probe mounted on device 2, and which is selected via parameter **ddd**.

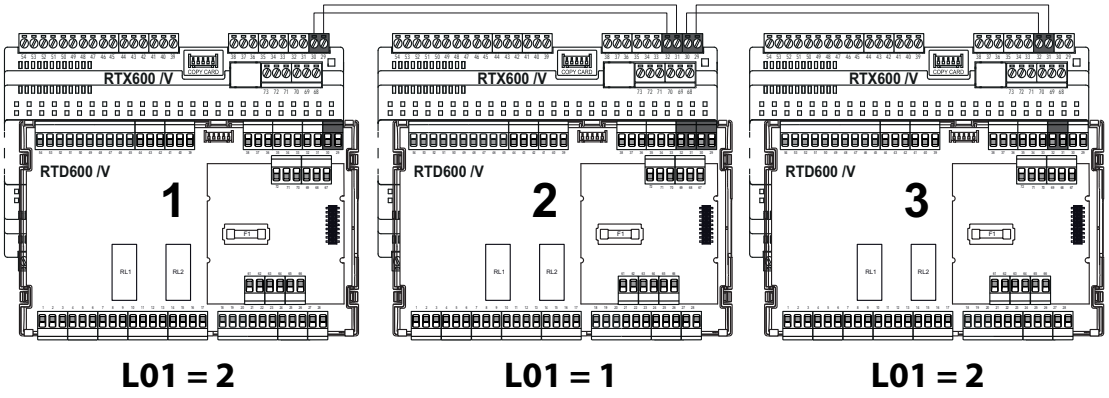

NOTE:
1. If device 2 (the one sharing the value with the network) has an active alarm signal on the display (e.g. probe alarm), this is not shared with devices 1 and 3;
2. If device 2 shares the value of a probe not working, the other devices will display the value selected by the local parameter **ddd**.
3. If device 1 and/or device 3 have additional alarm signals (e.g. local probe alarms), these will be displayed locally;
4. If device 1 and/or device 3 do not receive the value of device 2 (no signal in the Link[2]), they will display the value selected by the local parameter **ddd**.

8.2.5. Sharing the setpoint value

Via the Link² network it is possible to share the SPI regulation setpoint among all cards.
If the setpoint is modified on any of the cards in the Link² network, the setpoint of all other cards in the Link² network will automatically be updated.

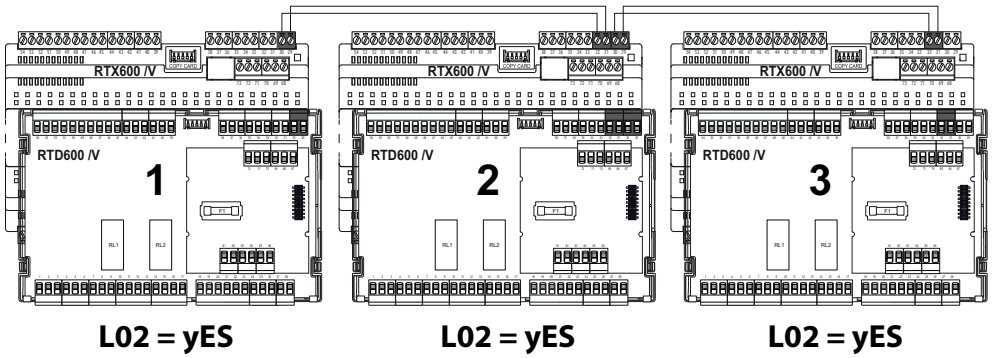

NOTE: When parameter **L02 = yES**, if the setpoint value of any device is modified, the same value will also be set in all the other devices in the network.
If one of the devices is removed from the network or communication is dropped after a change in the setpoint value, it will continue to use the new set value.

8.2.6. Sharing commands

Via the Link² network it is possible to share the following commands:

- Alarms
- Stand-By;
- Lights;
- AUX;
- Energy saving.

(See parameters **L00** ... **L12** present in folder **Lin**)

User parameters

The parameters that manage this regulator are:

Label	Description
rP1	Sets which is the regulation probe 1 to use.
dit	Interval between the start of two consecutive defrost cycles. 0 = function disabled.
dOH	Defrost cycle enabling delay from request.
L00	Selects which probe to share.
L01	Shares the displayed value with the Link².
L02	Sends the setpoint value to the Link² network when it has been changed.
L03	Enables sending of call for defrost to the Link² network.
L04	End defrost mode.
L05	Enables synchronization of Stand-by command.
L06	Enables synchronization of lights command.
L07	Enables synchronization of Energy Saving command.
L08	Enables synchronization of AUX command.
L09	Enables sharing of saturation (pressure) probe.
L10	Sets the timeout for the end of dependent defrosts.
L11	Sets the number of devices connected in the Link² (max 8)
L12	Enables alarm sharing in Link².
Adr	Modbus protocol controller address
ddd	Selects the type of value to show in the display.
rbu	Backup saturation probe selection.

8.3. REGULATION

RTX-RTD 600 /V has several different regulation modes:

- Single Thermostat;
- Double Thermostat “in series”;
- Double Thermostat “in parallel”;
- with 2 independent regulators

NOTE:when using “Single Thermostat” mode it is possible to have an auxiliary regulator for each application customised by the user (e.g. light sensor management, etc.)

8.3.1. Single Thermostat Regulation

The “Single Thermostat” regulator is always enabled and can work in hot or cold mode (see **HC1**).
Only in the case of the “Single Thermostat” (**rE = 0**) is it possible to manage the regulation differential in relative or absolute mode:

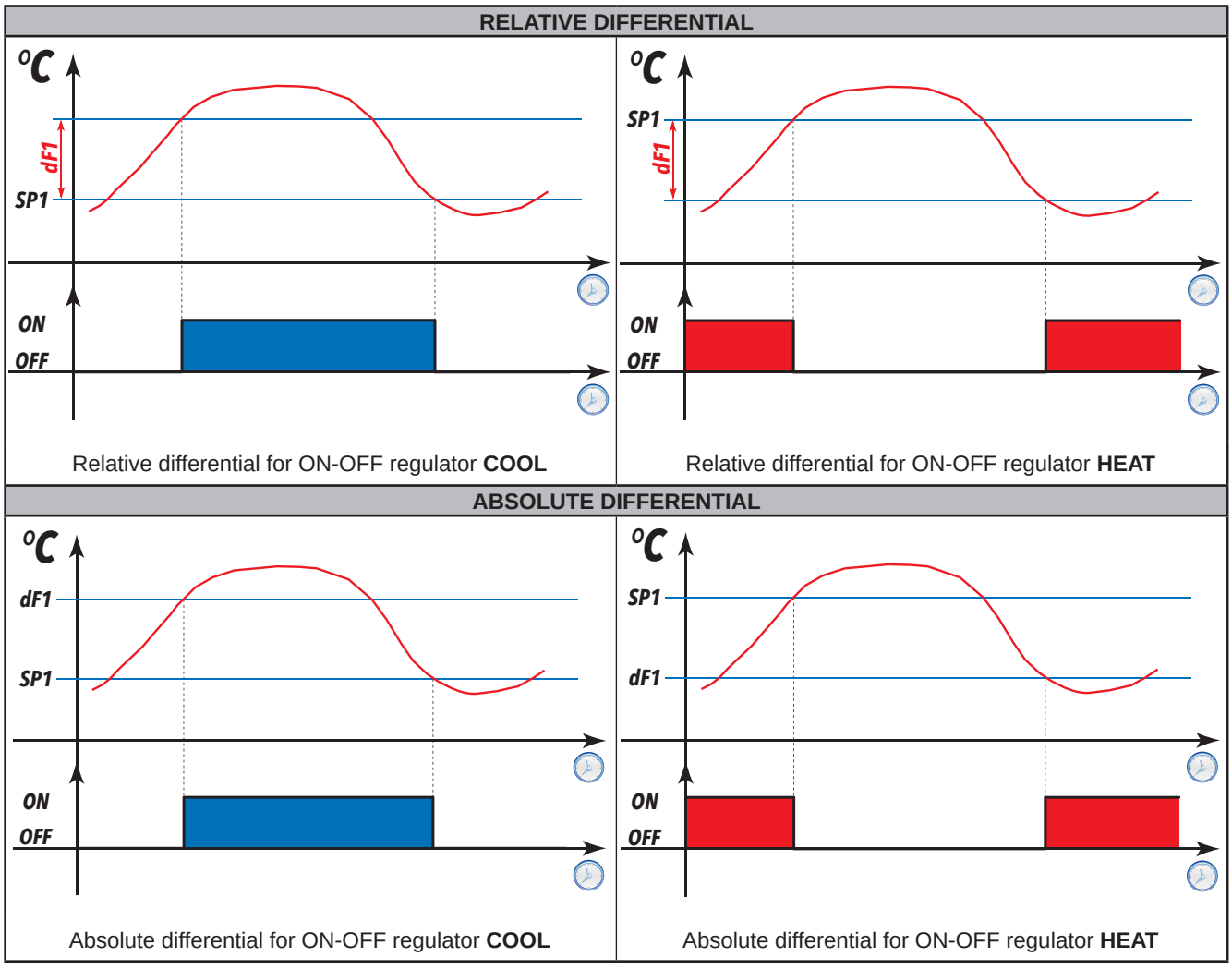

The regulator settings are managed via the following parameters:

- **rP1**: regulation probe 1 settings
- **SP1**: first regulator setpoint / (switch ON) switch off setpoint settings
- **dF1**: first regulator differential / (switch OFF) switch on setpoint settings
- **Stt**: differential mode settings (Absolute or Relative)
- **HC1**: first regulator hot/cold mode settings

8.3.2. Double Thermostat “in series” regulation

This regulator activates cold/hot only if both thermostats have been requested, and disables it when at least one of the two thermostats has been satisfied (cabinet with probe regulation in both inlet and outlet).
If one or both of the thermostats has a probe error, the regulation will use the probe error parameters.
In the following graph, **1_T1** represents the trend of the probe set as thermostat 1 and **1_T2** represents the trend of the probe set as thermostat 2.

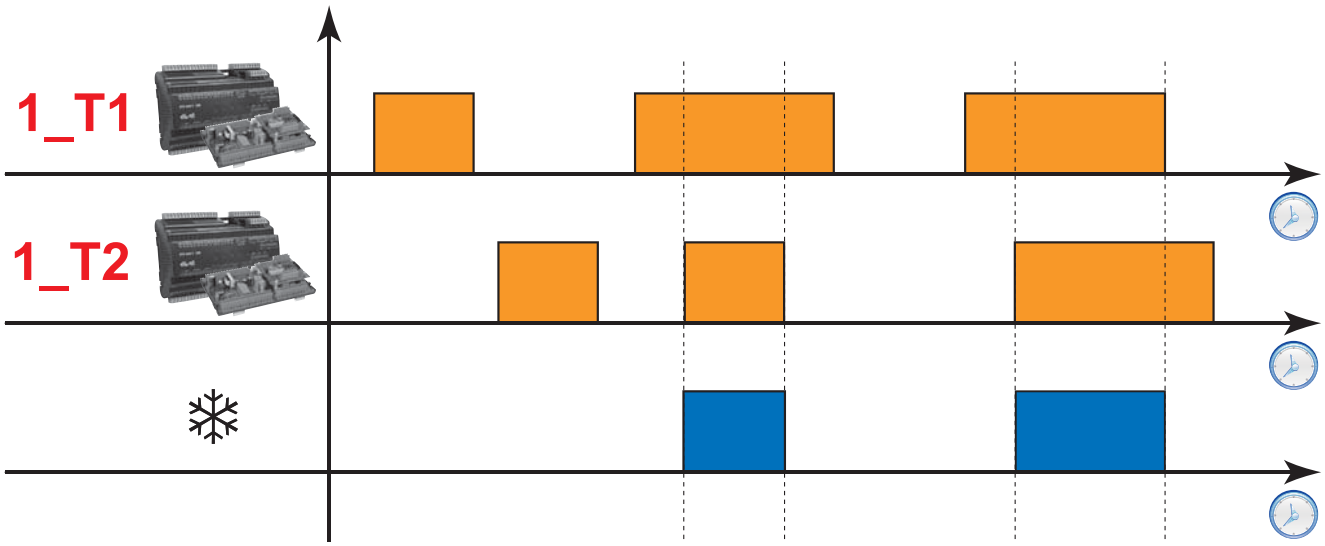

The 2 regulators are set via the following parameters:

- First regulator:
  - **rP1**: regulation probe 1 settings
  - **SP1**: first regulator setpoint settings
  - **dF1**: first regulator differential settings
  - **HC1**: first regulator hot/cold mode settings
- Second regulator:
  - **rP2**: regulation probe 2 settings
  - **SP2**: second regulator setpoint settings
  - **dF2**: second regulator differential settings
  - **HC2**: second regulator hot/cold mode settings

8.3.3. Double Thermostat “in parallel” regulation

This regulator activates cold/hot only if both thermostats have been requested, and disables it when both thermostats have been satisfied (combined cabinet: island and vertical).
If one or both of the thermostats has a probe error, the regulation will use the probe error parameters.
In the following graph, **1_T1** represents the trend of the probe set as thermostat 1 and **1_T2** represents the trend of the probe set as thermostat 2.

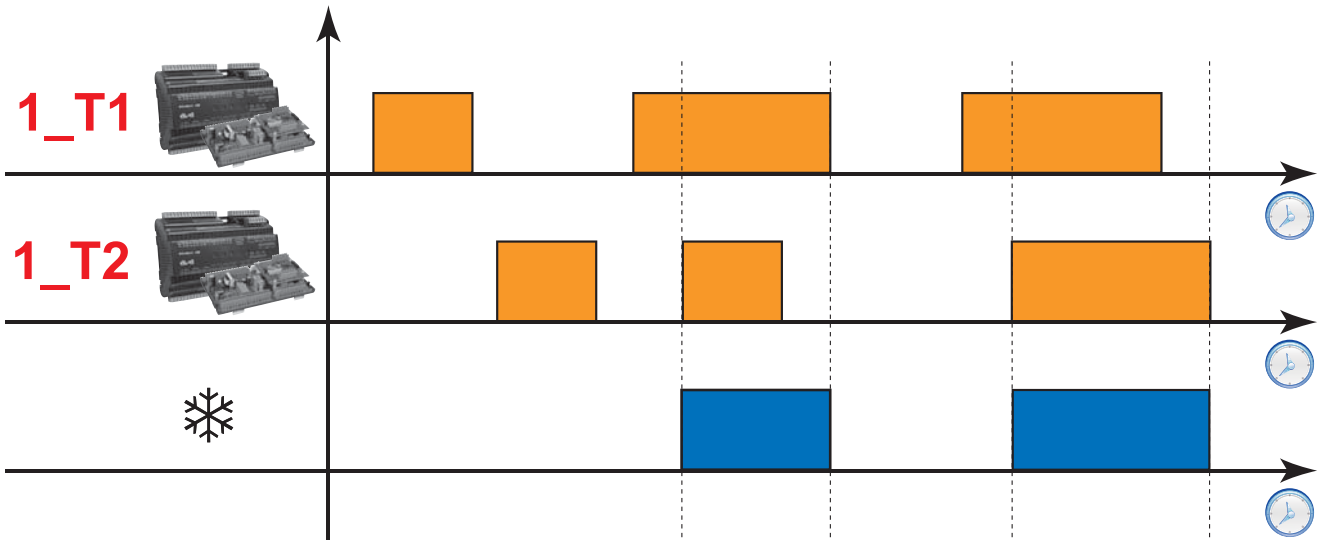

The 2 regulators are set via the following parameters:

- First regulator:
  - **rP1**: regulation probe 1 settings
  - **SP1**: first regulator setpoint settings
  - **dF1**: first regulator differential settings
  - **HC1**: first regulator hot/cold mode settings
- Second regulator:
  - **rP2**: regulation probe 2 settings
  - **SP2**: second regulator setpoint settings
  - **dF2**: second regulator differential settings
  - **HC2**: second regulator hot/cold mode settings

8.3.4. Regulation with 2 independent regulators

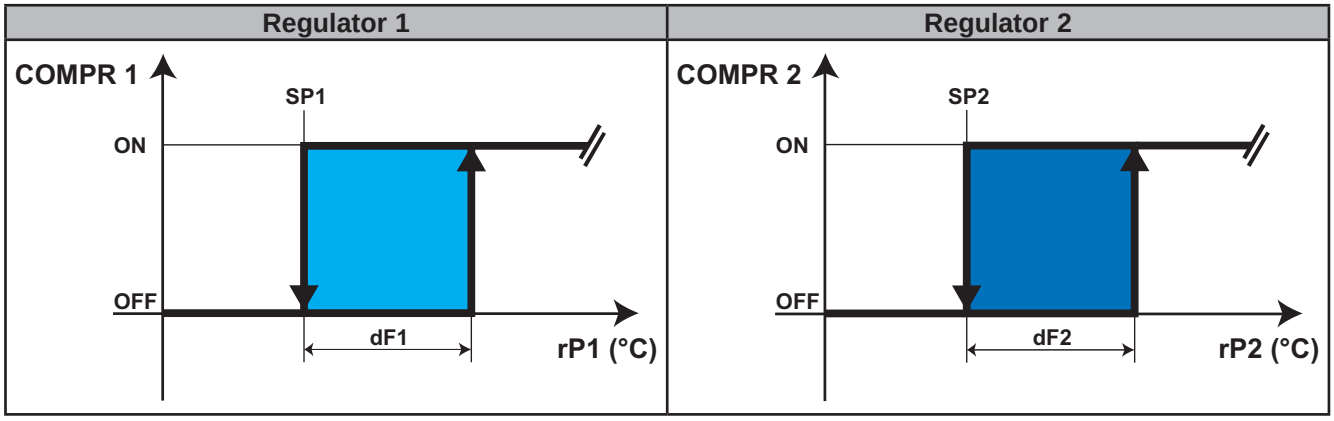

The first regulator actuates the output **COMPR 1**, which depends on the values and parameters indicated in the diagram, as well as the compressor safety timing.

The second regulator actuates the output **COMPR 2**, which is not necessarily a compressor, but a generic auxiliary output, which is not dependent on the timing described in parameters **Cit**, **CAt**, **dOn**, **dOF**, **dbi**.

The second regulator:
- may work in both HEAT and COOL modes;
- has its own setpoint (**SP2**) and differential (**dF2**);
- has no safety timing, with the exception of **OdO**;
- in the event of a probe error, the output will always be in OFF.

This regulator is independent from other regulations, with the exception of stand-by, in which the output is placed in OFF. It may be used, for example, to manage the lights depending on a light sensor connected to one of the 5 analogue inputs **Pb1**…**Pb5**

NOTE: in this case set the setpoint **SP2** and the differential **dF2** according to the transcoding tables associated to the compatible sensors. Contact Eliwell for the choice of sensor.

The 2 regulators are set via the following parameters:

- First regulator:
  - **COMPR 1**: (**Compressor**; H21...H27 = 1) output trend for first regulator
  - **rP1**: regulation probe 1 settings
  - **SP1**: first regulator setpoint settings
  - **dF1**: first regulator differential settings
  - **HC1**: first regulator hot/cold mode settings
- Second regulator:
  - **COMPR 2**: (**AUX**; H21...H27 = 5) output trend for second regulator
  - **rP2**: regulation probe 2 settings
  - **SP2**: second regulator setpoint settings
  - **dF2**: second regulator differential settings
  - **HC2**: second regulator hot/cold mode settings

8.3.5. Continuous Modulation Regulation

Continuous Modulation regulation is enabled via parameter **rE** (**rE** = 5).
The function comes on when the cabinet reaches the temperature set in parameter **SP1**, or in the case of energy saving, by the sum of parameters **SP1+OS1**.
When the function is activated, the device controls the valve opening to maintain the cabinet temperature constant and keep the overheating above the value set in parameter **OLt**.
This function prevents drastic variations in the cabinet temperature, so a higher saturation temperature can be set on the compressors, increasing system efficiency.

8.3.6. Regulation in the event of a probe error

If there is a probe error on the first regulator, and/or the second regulator in the case of a double thermostat, the output is managed according to the parameters **Ont** and **OFt**.

8.3.7. Energy Saving

The Energy Saving mode can be activated in one of the following ways:

- from digital input (where appropriately configured);
- from a key (where appropriately configured);
- remotely (directly from the supervision system);
- from an RTC (where appropriately configured);
- from Link[2]

During these modes, in addition to the regulation setpoints **SP1** and **SP2**, will be offsets **OS1** and **OS2**.
If the second regulator is active, the offset will also be added to this.

NOTE: if you do not want the Offset to be added to the second regulator too, set **OS2** = 0.

During this mode, the value of the differential worked on will also be changed, **dF1** will be replaced by **dn1** and **dF2** by **dn2**. If the second regulator is active, the differential will also be added to this.

NOTE: if you do not want to change the value of the differential during Energy Saving mode, set **dn1** = **dF1** and **dn2** = **dF2**.

8.3.8. Dynamic setpoint

If a dynamic setpoint is active (and which is in any case disabled during Energy Saving mode), it is possible to increase or decrease the setpoint of value **Od1** (for setpoint 1) and **Od2** (for setpoint 2) when the door stays closed for a given time (defined by parameter **Cdt**).
As soon as the door is open for a time defined in **ESo** in an hour (not necessarily continuous but cumulative) it returns to the normal setpoint value.
Via parameter **ESo** you can set the disabling “threshold”:

- **ESo** = 0: high use before disabling
- **ESo** = 10: low use before disabling

The function is active if parameter **Cdt** ≠ 0 and if a DI is configured as a door switch.
If the auxiliary regulator is active, the offset will also be added to this.

NOTE: if you do not want the Offset to be added to the second regulator too, set **Od2** = 0.

The graph below shows the algorithm operation. The settings are:

- **ESt** = 2
- **H11** = 8
- **ESF** = yES (enabled if the “Energy Saving” mode is active).

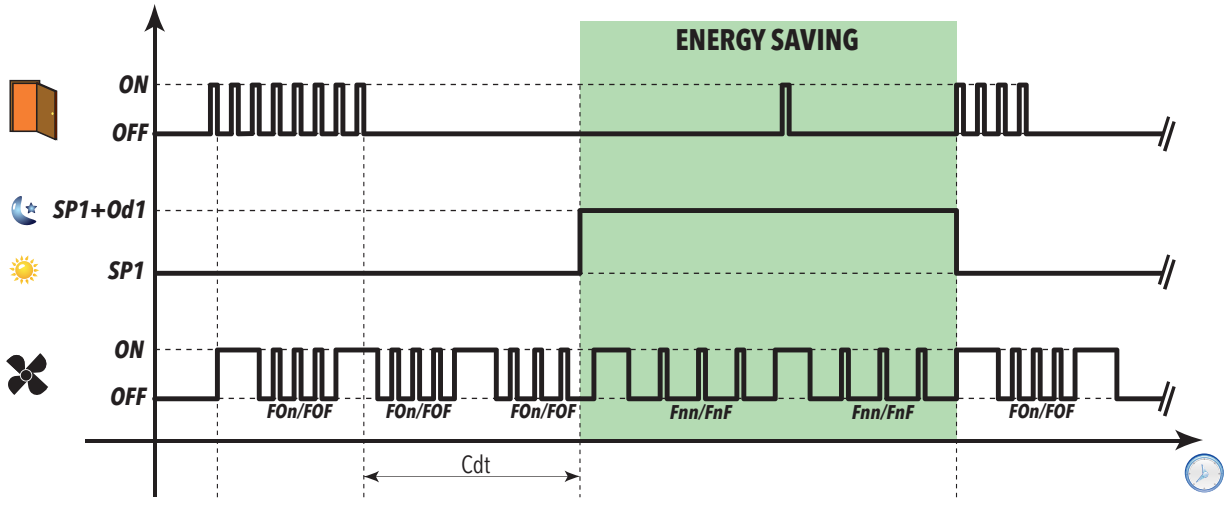

8.3.9. Remote Offset (managed only by the Supervisor)

Via the serial commands it is possible to increase/decrease the current quantity regulation setpoint value **OF1** (added to setpoint **SP1** and any offset **OS1** or **Od1**).

NOTE: This increase/decrease is valid only for the first setpoint (**SP1**).

This function is typically used for systems with hot gas defrost, which requires a certain number of cabinets in cooling, to make certain there is enough hot gas to tun the most efficient defrost.

User parameters

The parameters that manage this regulator are:

Label	Description
rE	Sets the type of control to be used.
SP1	Temperature control SEtpoint regulator 1.
dF1	Activation differential (absolute or relative) regulator 1.
SP2	Temperature control SEtpoint regulator 2.
dF2	Activation differential of the second thermostat (absolute or relative) regulator 2.
HC1	Hot/Cold mode regulator 1.
HC2	Hot/Cold mode regulator 2.
Ont	Controller switch-on time in the event of probe in error.
OFt	Controller switch-off time in the event of probe in error.
dOn	Compressor output activation delay from request.
dOF	Compressor output activation delay from shutdown.
dbi	Delay between two consecutive starts of the compressor output.
OdO	Delay in activating outputs after the device is switched on or after a power outage.
Cdt	Door close time.
ESo	Cumulative door open time that will disable Energy Saving mode.
OS1	Setpoint offset regulator 1.
OS2	Setpoint offset regulator 2.
Od1	Energy Saving Offset glass door display cabinets regulator 1.
Od2	Energy Saving Offset glass door display cabinets regulator 2.
dn1	Activation differential regulator 1 in energy saving mode.
dn2	Activation differential regulator 2 in energy saving mode.

8.4. COMPRESSOR/GENERAL PROTECTIONS

Description

If the cold room probe is in error E1 the output relay configured as compressor/general regulates in accordance with the times set in parameters **Ont** and **Oft**.
The first time to consider is **Ont**.
If **Ont** > 0 the protection programmed with parameters **dOn**, **dOF** and **dbi** must be respected (see Safety Compressor timers).

NOTE: The parameter **OdO** inhibits the activation of all outputs commanding a relay for its entire duration (compressor/general, defrost, fans etc.), excluding buzzers or alarm relays.

Operating conditions

The table below lists the ways the compressor relay output can be managed:

Ont	OFt	Compressor OUT
0	**0**	OFF
0	**>0**	OFF
>0	**0**	ON
>0	**>0**	DUTY CYCLE

If **Ont** > 0 and **OFt** = 0, the compressor regulator will remain on.
If **Ont** > 0 and **OFt** > 0: the compressor regulator activates in operating cycle mode irrespective of the values read by the probes (cabinet probe inoperable) and of requests from other utilities (**Duty Cycle**).

If the cold room probe is working properly, the Duty Cycle mode does **NOT** activate as it does not have priority over normal compressor regulator settings.
The following diagram shows the **Duty Cycle** operating mode based on parameters **Ont** and **OFt > 0**:

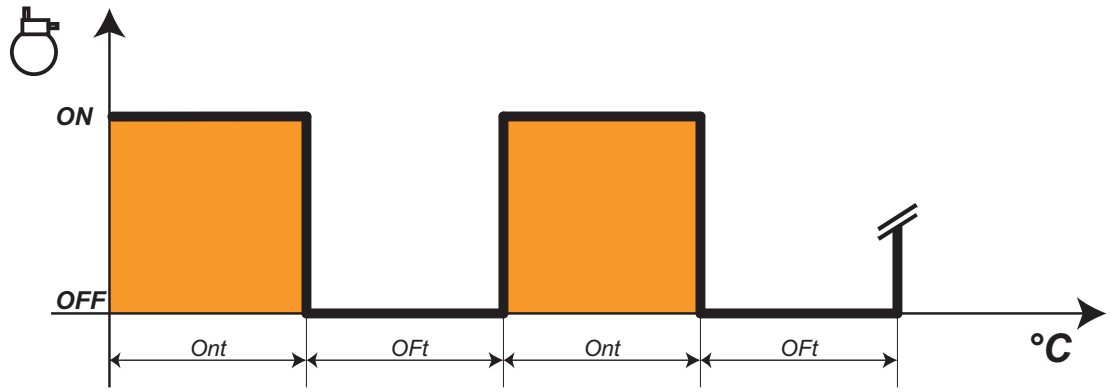

8.4.1. Compressor protection timers

Compressor on-off operations must respect the safety times that you can set using the special parameters as described below. The compressor LED will flash to indicate when an activate compressor request has been received but a safety protection exists.
A safety time (compressor On... Off safety time) regulated by the parameter **dOF** must be respected between a switch-off and switch-on of the same compressor.
This waiting time also occurs at switch-on of the device.
A safety time regulated by the parameter **dbi** must be respected between one switch-on and the next.
The safety time set in parameter **dOn** must elapse between a start-up request and actual start-up. Times set with parameters **dOn**, **dOF** and **dbi**, if active, are not accumulative but parallel.
The following diagram illustrates the operation of the compressor protection with parameters **dOn**, **dOF**, **dbi** set:

IN	Input status for compressor regulator.
OUT	Output status for compressor regulator.

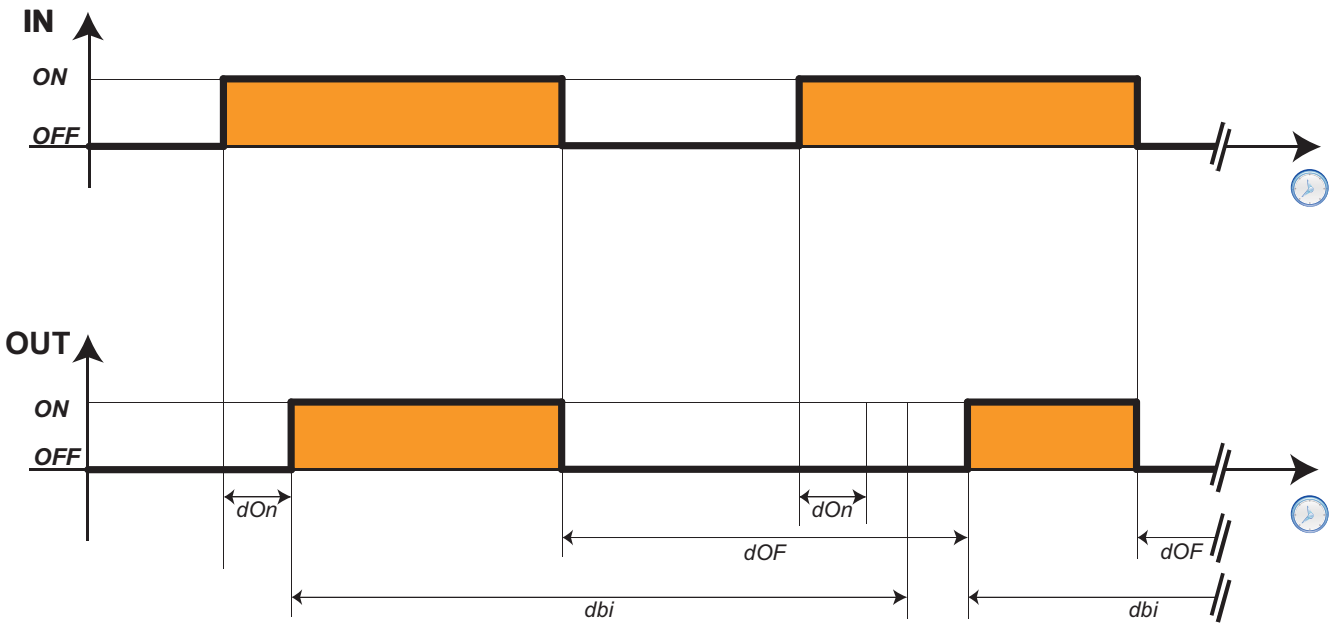

NOTE: See the section entitled Compressor Function During Defrost for other protections and compressor timings.

User parameters

The parameters that manage this regulator are:

Label	Description
Ont	Compressor output ON time in the event of a Pb1 probe in error.
OFt	Compressor output OFF time in the event of a Pb1 probe in error.
dOn	Compressor output activation delay from request.
dOF	Compressor output activation delay from shutdown.
dbi	Delay between two consecutive starts of the compressor output.
OdO	Output activation delay from power-on.

8.5. DEFROST/DRIPPING

8.5.1. Enable defrost

Defrost is used to stop ice from forming on the surface of the evaporator.
Its **activation** can be:

- automatic, in one of the following modes selected via **dCt**:
  - compressor hours (Digifrost);
  - appliance hours;
  - compressor stopped;
  - via clock (see corresponding section under RTC);
  - from probe (not applicable in systems with double evaporator).
- via LINK[2];
- via DI;
- from key;
- from remote.

The **type** of defrost can be selected via the parameter **dtY** and can be:

1. defrost with electric heaters;
2. defrost with electric heaters: Smart Defrost
3. inverse;
4. hot gas for plug-in;
5. hot gas for cabinets with remote control

Dripping

On completion of defrost, given that there will be water on the evaporator, it is better not to start “cooling” right away as this would ruin the effect of the defrost by creating ice immediately. The dripping interval is regulated via parameter **dt**.

Defrost conditions and operation

Defrosting is enabled if:

- the evaporator temperature, read by probe 2, is lower than the defrost end setpoint configured via parameter **dSt**.
- manual defrosting has not already been activated, in which case the request for automatic defrost will be cancelled.

Defrost requests can be made in the following ways:

Controller power-on	If parameter **dPO** (defrost at power-on) is programmed accordingly.
Time intervals	If **di**t > 0 whenever the defrost time interval set in parameter **dit** elapses.
Manually (via key)	by pressing the key if enabled (H31 = 1). The cycle will not start if **OdO** ≠ 0, the request will be refused and the display will flash three times to indicate that defrost is impossible.
External request via DI	If DI appropriately configured. Activation from DI respects the protections of the automatic cycle. The cycle will not start if **OdO** ≠ 0, the request will be refused and the display will flash three times to indicate that defrost is impossible.

8.5.2. Automatic defrosting

The defrost cycle is programmed to start at intervals.

NOTE: To disable the automatic cycle, set **dit**=0.

If **dit>0**, then defrost cycles will be run at fixed intervals, as indicated in parameter **dit**, and the interval time is counted as follows:

Par.	Value	M.U.	Description	Notes
dCt	0	num	Defrosting disabled	-
	1	num	Compressor running hours --- DIGIFROST® method	In this case, the counter runs only if the compressor is on. A new count starts when the defrost interval elapses and a new defrost cycle starts if conditions permit. **NOTE**: compressor running time is counted separately from the evaporator temperature. If the evaporator probe were missing or inoperable, the count would still be active for the period of activity of the compressor.
	2	num	Controller running time	The defrosting interval is counted continuously when the device is on and starts at each power-on. A defrost cycle starts when the defrosting interval elapses (indicated by dit) if conditions permit and the controller immediately starts counting a new defrosting interval.
	3	num	Compressor stop	Each time the compressor stops, a defrost cycle is run according to the mode set in parameter dty.
	4	num	RTC (clock)	The clock can be used to set: • defrost times (**6** bands for weekdays and 6 bands for weekends), • regular defrosts (every **n** days) • daily events (**1** event for weekdays and **1** event for weekends) Time band defrosts and periodic defrost are mutually exclusive functions (they cannot be activated simultaneously). If defrost by RTC has been enabled and the clock is inoperable, the defrost will run according to the mode set in **dit** (provided **dit** ≠ 0).
	5	num	Temperature	The defrost is activated when the evaporator temperature falls below threshold **dSS**. If probe dP1 is inoperable, the defrost is activated according to the interval **dit**.

NOTE: regardless of how the interval is counted, the following conditions apply:

If parameter **OdO** is underway or the temperature read by the evaporator probe is higher than **dS1**, then defrost will not be permitted: a new interval will be counted and only at the end of this subsequent count will conditions be tested for the start of a defrost cycle.

MANUAL DEFROST

Press the manual defrost key  (or from Digital Input if appropriately configured **H11...H18** = 1), the appliance enters defrost.

Procedures for the activation of this defrost cycle are the same as for external defrost.

The defrosting interval will now be counted as described for Automatic Defrost (time **dE1** is not cleared, it continues).

If the conditions for defrost activation are not present, i.e.:

- the time set in parameter **OdO** has not elapsed
- the evaporator temperature is higher than the value set in parameter **dS1**

this will be signalled on the display (screen flashes three times) and defrost will stop.

Manual defrost is always enabled except when **dit** = 0.

8.5.3. External defrost

If the Digital Input is configured for this function (if **H11...H18** = 1) and if conditions permit, defrost can be requested and the relative regulator activated.
Time graphs for signals in each of the various function modes are presented below.

NOTE: Defrost activation occurs when the signal is toggled and the polarity can be selected.
Hence you can only activate a defrost, NOT stop one that is underway.
Defrost or dripping currently underway and the defrost or dripping interval count cannot be suspended.

IN (Digital Input)	Input status for defrost regulator, with activation from Digital Input.
OUT (Defrost)	Output status for defrost regulator.
DurDI	Digital Input duration.

NOTE: dS1 indicates end defrost time when Setpoint temperature reached and **dEt** indicates end of defrost due to timeout.

The control diagram is as follows:

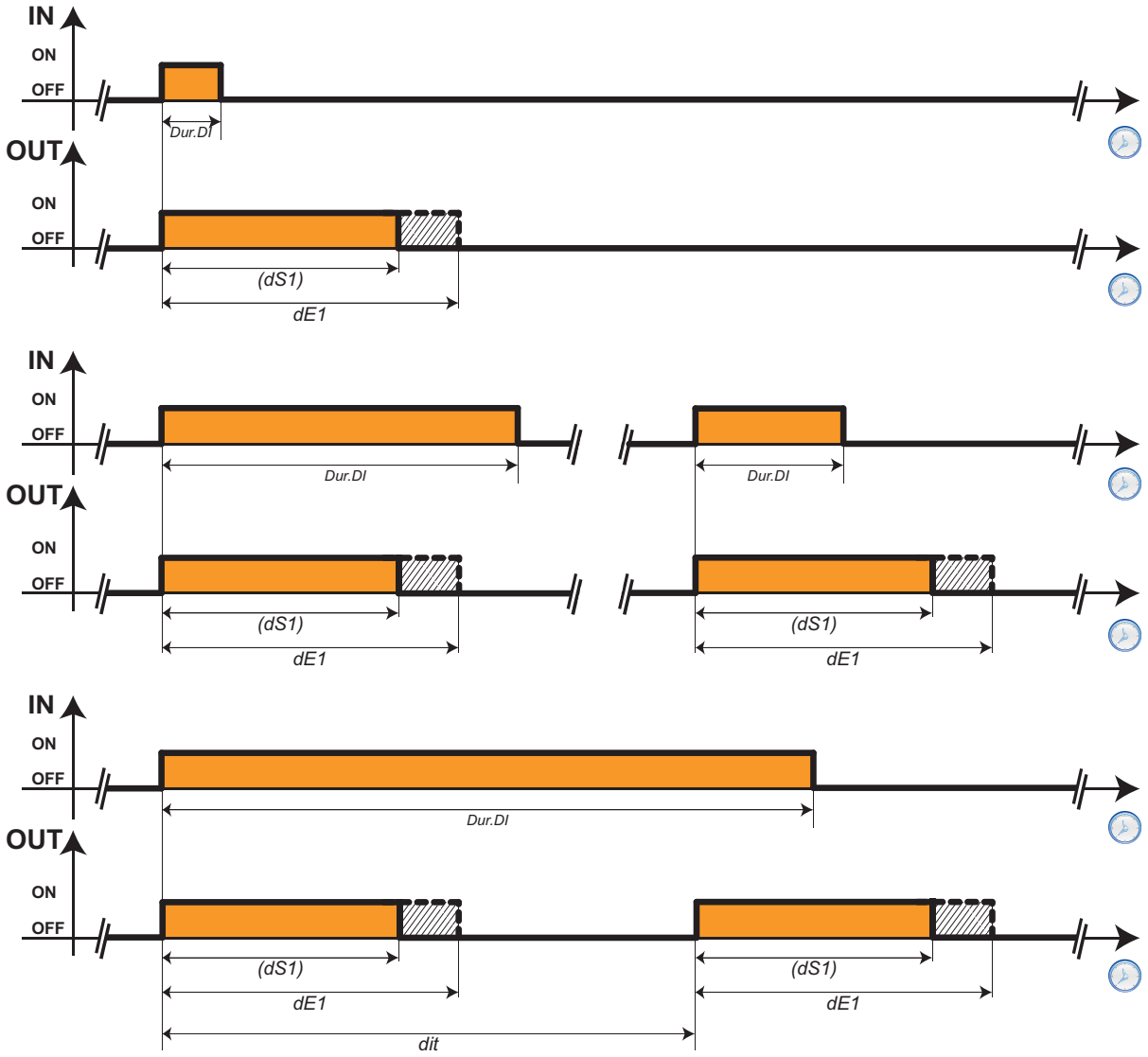

8.5.4. Defrost mode

Defrost with electric heaters

Defrost with electrical heaters is configured by setting **dtY = 0**.
It is used in "**LOW TEMPERATURE**" applications.
The compressor remains stopped for the duration of the defrost cycle and the relay configured as defrost regulator output, to which the electrical heaters are connected, activates.
On completion of defrost, the electrical heaters are switched off and the compressor remains off for the dripping time set in parameter **dt**, if it is not equal to zero.
Defrost ends due to:

Evaporator probe (dP1)	End of defrost description
dP1 ABSENT	Due to timeout set in parameter **dE1** (defrost timeout).
dP1 PRESENT	Temperature setpoint for the end of defrost set in parameter **dS1** reached. If this setpoint is not reached within the time set in parameter **dE1** (defrost timeout), the defrost will end due to timeout.

NOTES:
- If **dS1** intervenes before **dE1**, dripping (**dt** and **Fdt**) aligns with **dS1**.
- If **Fdt** < **dt** then **Fdt** = **dt**.
- During defrost, fans are OFF if parameter **dFd** is set accordingly, otherwise they will behave as set for the fan regulator.

The operating diagram is as follows:

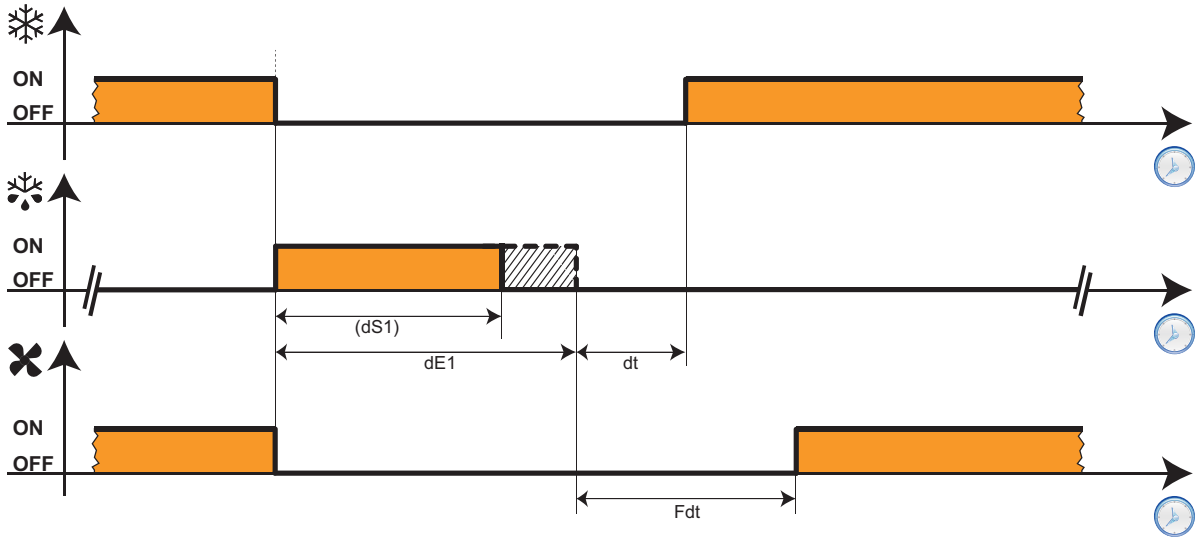

Legend:

	Output status for Compressor regulator
	Output status for Defrost regulator
	Output status for Evaporator Fan regulator

Defrost with electrical heaters: Smart Defrost

This algorithm is used to optimise the defrost via the use of the heaters.

Via this algorithm it is possible to reduce the defrost end setpoint, compared to standard mode, as the controller, appropriately modulating the heaters, is able to detect when all the ice has been melted and it is therefore possible to end the defrost (before time-out **dE1**).

NOTES: • This algorithm is valid for both single and double evaporators.
• The function is active if **dty = 4** and ends in time (**dE1**) or for temperature (**dS1**).

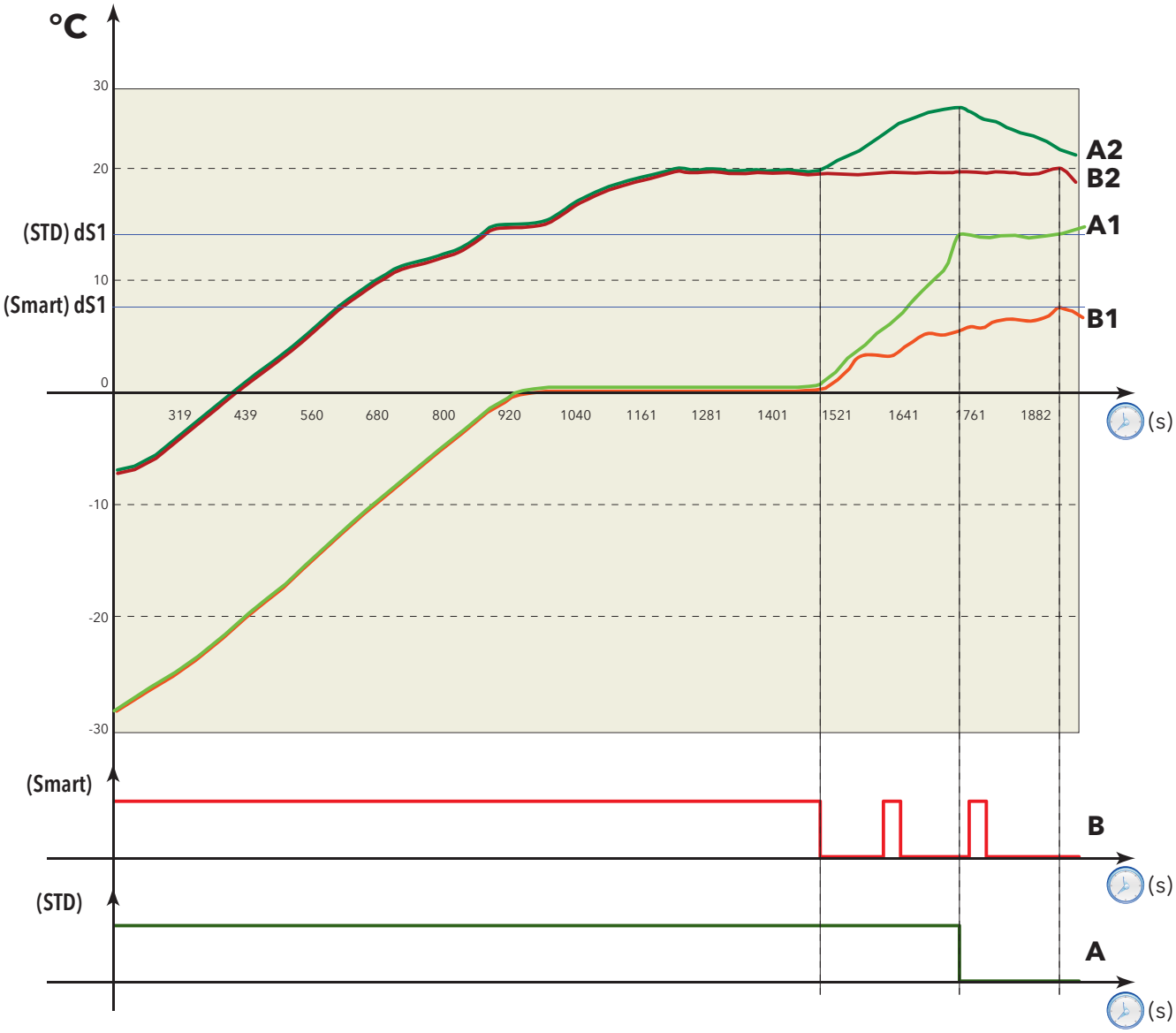

The meaning of the letters in the graph is described in the following table:

Legend	Curve Description
A	“Standard Defrost” Relay Activation
A1	“Standard Defrost” Evaporator Temperature
A2	“Standard Defrost” Cabinet Temperature
B	“Smart Defrost” Relay Activation
B1	“Smart Defrost” Evaporator Temperature
B2	“Smart Defrost” Cabinet Temperature

The configuration of this mode is similar to that for conventional defrost.
Set the same time-out, while the defrost end setpoint can be reduced.

Inverse defrost

Hot gas defrost is configured by setting parameter **dtY = 1**.
It is used in "**LOW TEMPERATURE**" applications.
The compressor stays on for the entire duration of the defrost cycle and the relay configured as defrost regulator output, and that the solenoid valve is connected to, activates.
On completion of the defrost cycle, the solenoid valve relay is de-energised and the dripping phase set in parameter **dt** (if not equal to zero) is interrupted. The compressor relay is once again controlled by the compressor regulator. Defrost ends due to:

Evaporator probe (dP1)	End of defrost description
dP1 ABSENT	Due to timeout set in parameter **dE1** (defrost timeout).
dP1 PRESENT	Temperature setpoint for the end of defrost set in parameter **dS1** reached. If this setpoint is not reached within the time set in parameter **dE1** (defrost timeout), the defrost will end due to timeout.

NOTES:
- parameters **dOn**, **dOF** and **dbi** still have priority.
- If **dS1** intervenes before **dE1**, dripping (**dt** and **Fdt**) aligns with **dS1**.
- If **Fdt** < **dt** then **Fdt** = **dt**.
- During defrost, fans are OFF if parameter **dFd** is set accordingly, otherwise they will behave as set for the fan regulator.

The operating diagram is as follows:

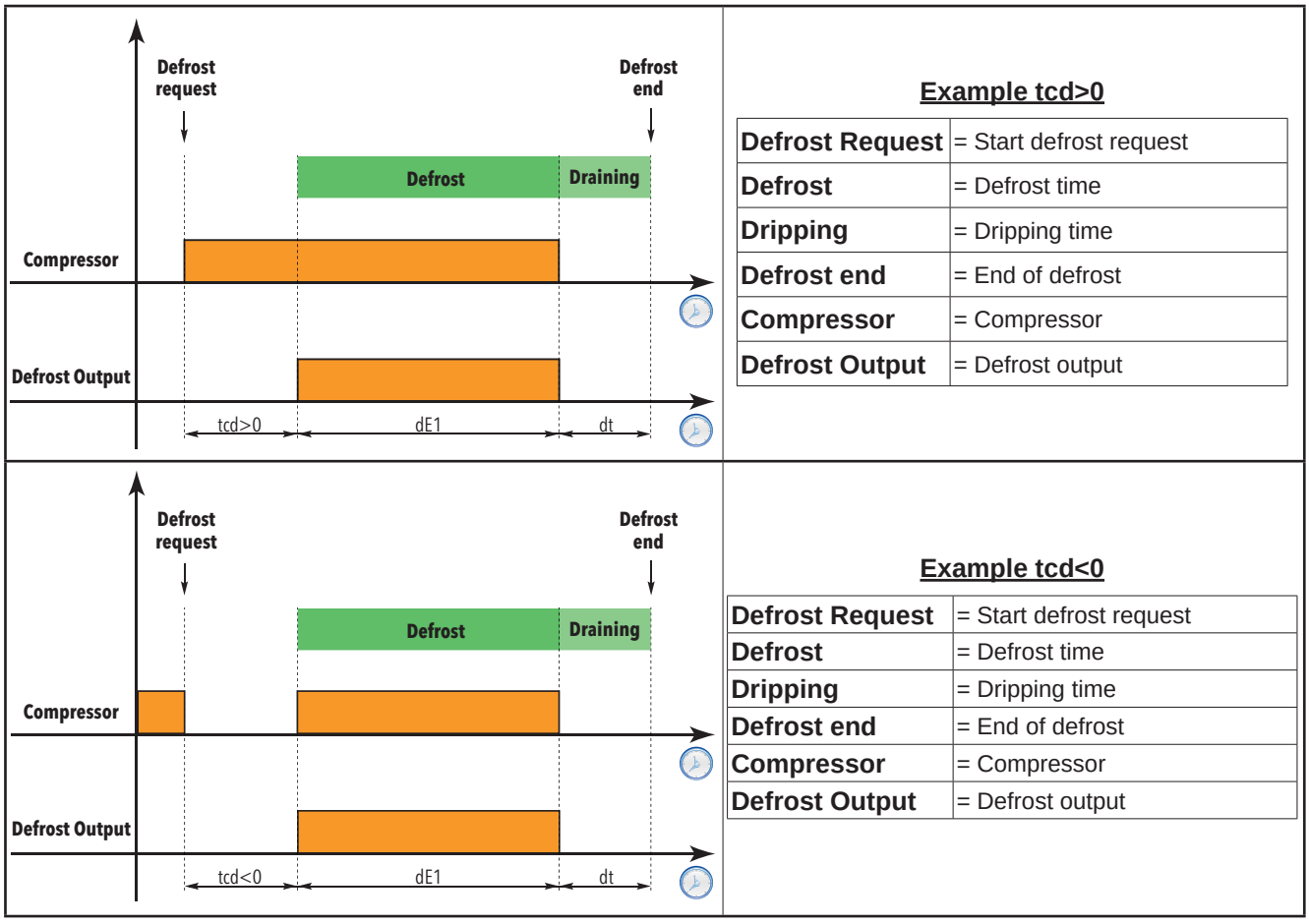

Example tcd>0

Defrost Request	= Start defrost request
Defrost	= Defrost time
Dripping	= Dripping time
Defrost end	= End of defrost
Compressor	= Compressor
Defrost Output	= Defrost output

Example tcd<0

Defrost Request	= Start defrost request
Defrost	= Defrost time
Dripping	= Dripping time
Defrost end	= End of defrost
Compressor	= Compressor
Defrost Output	= Defrost output

Hot gas defrost for plug-in systems

Hot gas defrost for **PLUG-IN** systems differs from cycle inversion defrost because as the refrigerant needed to be sufficiently heated before starting the defrost.
The defrost cycle consists of the following phases (or a subgroup thereof):

- **Deep-cooling**: gas heating and accumulation of cold in the cabinet for time **tdC** > 0
- **Pump-down**: cold gas evacuation from the evaporator, for time **tPd** > 0;
- **Defrost**: hot gas injection for time between **ndE** and **dE1**;
- **Dripping**: completion of water “evacuation” from the evaporator (for time **dt**).

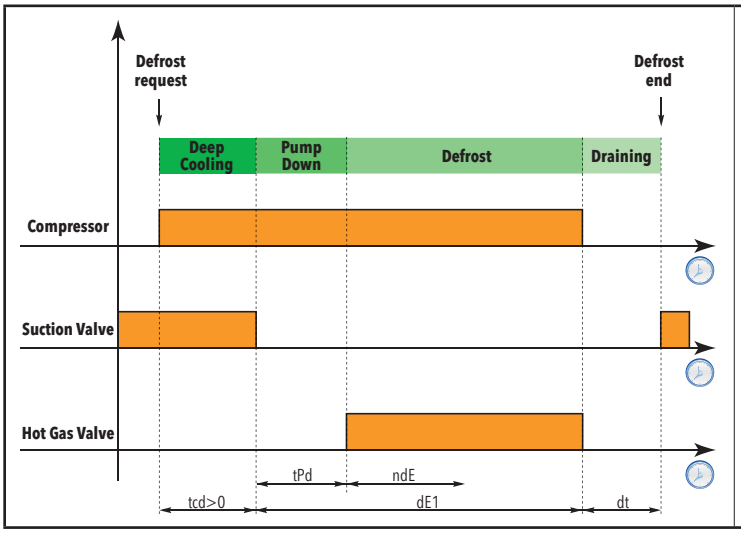

Example: dty=2; tcd>0 and PdC=0

Defrost Request	= Start defrost request
Deep Cooling	= Deep Cooling Period
Pump Down	= Pump Down Period
Defrost	= Defrost time
Dripping	= Dripping time
Defrost end	= End of defrost
Compressor	= Compressor (**H2x** = 1 with **x** = 1...5)
Suction Valve	= Suction Valve output (**H2x** = 13 with **x** = 1...5)
Hot Gas Valve	= Hot Gas Valve output (**H2x** = 2 with **x** = 1...5)

During the whole defrost phase: • (if present and enabled) the EEV valve output is off (OFF).
• The fans are off (OFF).

Hot gas defrost for systems with remote control

The hot gas defrost, in systems with **REMOTE CONTROL**, requires the following phases (or a subgroup thereof):

- **Pump-down**: cold gas evacuation from the evaporator (parameter tdC < 0);
- **Defrost**: hot gas injection (duration between ndE and dE1);
- **Dripping**: completion of water “evacuation” from the evaporator (for time dt);
- **Pump-down**: cold gas evacuation from the evaporator, for time PdC;
- **Regulation**: if required the EEV valve is reactivated.

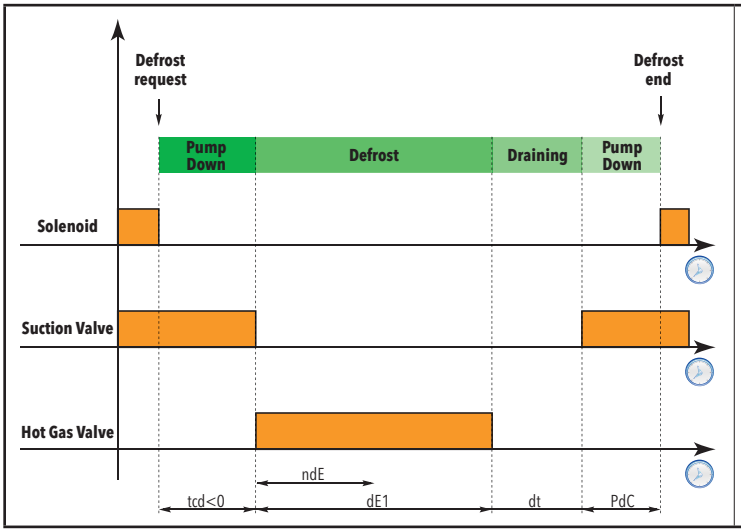

Example: dty=3; tcd<0 and PdC≠0

Defrost Request	= Start defrost request
Pump Down	= Pump Down Period
Defrost	= Defrost time
Dripping	= Dripping time
Pump Down	= Pump Down Period
Defrost end	= End of defrost
Solenoid	= Solenoid (**H2x** = 1 with **x** = 1...5)
Suction Valve	= Suction Valve output (**H2x** = 13 with **x** = 1...5)
Hot Gas Valve	= Hot Gas Valve output (**H2x** = 2 with **x** = 1...5)

During the whole defrost phase: • (if present and enabled) the EEV valve output is off (OFF).
• The fans are off (OFF).

Double evaporator defrost

In applications with double evaporator, it is possible to optimise the defrost using a probe, and an output, for every single evaporator, to optimise the heat phase, of every single evaporator, according to actual needs.

NOTES: 1) This mode is active if at least two outputs are configured as defrost (evap.1 and evap.2);
2) Every evaporator has its own defrost end set and time-out.

The decision if there are the conditions for defrosting (temperature below the threshold), as there are two sensors (one for each evaporator) can be made in one of the following ways:

- **dFt = 0**: verifying that only the defrost probe of evaporator 1 (**dP1**) is below the threshold **dS1**;
- **dFt = 1**: at least one evaporator has the conditions for defrosting.
  Defrost probe evaporator 1 (**dP1**) is below the threshold **dS1** and/or the defrost probe evaporator 2 (**dP2**) is below the threshold **dS2**;
- **dFt = 2**: both evaporators have the conditions for defrosting.
  Defrost probe evaporator 1 (**dP1**) is below the threshold **dS1** and the defrost probe evaporator 2 (**dP2**) is below the threshold **dS2**.

The defrost for every single evaporator ends when the following conditions have been met:

- the **dE1**/**dE2** timeout period has begun
- the **dS1**/**dS2** temperature has been reached

NOTE: The dripping counter starts when both evaporators have finished defrosting.

NOTE: It is also possible to use the control via two sensors with only one defrost output.
EXAMPLE: double evaporator, each with its own probe, but common defrost, or only one evaporator with two sensors (fixed in two different positions).

User parameters

The parameters that manage this regulator are:

Label	Description
dty	Selects defrost type
dit	Time interval between 2 consecutive defrost cycles
dCt	Selects the count mode for the defrost interval
dOH	Defrost cycle activation delay after request
dE1	Defrost timeout, evaporator 1. Determines the maximum defrost duration
dE2	Defrost timeout evaporator 2. Determines the maximum defrost duration
dS1	Defrost 1 end temperature - determined by evaporator probe 1
dS2	Defrost 2 end temperature - determined by evaporator probe 2
dSS	Start defrost temperature threshold (only if dCt = 5 - temperature)
dPO	Determines whether or not the device defrost at power-up
Fdt	Fan activation delay after a defrost cycle
dt	Dripping time
dFd	Used to exclude the evaporator fans to be selected or not selected during defrosting.
dAO	Temperature alarm disabling time after defrost cycle
dAt	Alarm signalling end of defrost due to timeout
ddL	Display mode during defrost cycle (lock display)
Ldd	Timeout value for display unlock - label dEF

8.6. EVAPORATOR FANS

8.6.1. Operating conditions

The regulator is active when:

- time set in parameter **OdO** has elapsed.
- the evaporator probe temperature is lower than the value of parameter **FSt**.
- during defrost it is not excluded by the parameter **dFd** (**dFd = On**).
- dripping is not active (**dt**).
- the fan delay is not active after defrost (**Fdt**).

The request to switch fans on or off can be made in the following ways:

- by the compressor regulator to help in the “cooling” process (temperature control mode).
- by the defrost regulator to verify and/or limit the diffusion of hot air.

		DAY		NIGHT (Energy Saving)	
	FCO	Compressor ON	Compressor OFF	Compressor ON	Compressor OFF
Probe present and working	**0**	Thermostat controlled	Off	Thermostat controlled	Off
	1	Thermostat controlled	Thermostat controlled	Thermostat controlled	Thermostat controlled
	2	Thermostat controlled	Thermostat controlled	Thermostat controlled	Thermostat controlled
	3	Thermostat controlled	Duty Cycle day	Thermostat controlled	Duty Cycle night
	4	Thermostat controlled	Duty Cycle day INV	Thermostat controlled	Duty Cycle night INV**
Probe present but in error	**0**	Duty Cycle day	Off	Duty Cycle night	Off
	1	On	Off	On	Off
	2	Duty Cycle day	Duty Cycle day	Duty Cycle night	Duty Cycle night
	3	Duty Cycle day	Duty Cycle day	Duty Cycle night	Duty Cycle night
	4	Duty Cycle day	Duty Cycle day	Duty Cycle night	Duty Cycle night
Probe absent	**0**	On	Off	On	Off
	1	On	On	On	On
	2	Duty Cycle day	Duty Cycle day*	Duty Cycle night	Duty Cycle night*
	3	On	Duty Cycle day*	On	Duty Cycle night*
	4	On	Duty Cycle day INV**	On	Duty Cycle night INV**

* See section **“8.6.5. Fan operation without probe” on page 102** (**H42** ≠ 0).
** Normal Duty Cycle operation reversed

The graphs below illustrate fan operation on the basis of the **FCO** value.
In the graphs, we can see that:

Legend:

DAY	Day
NIGHT	Night (Energy Saving)
COOL	Cooling
Probe OK	Fan operation with the probe present and working
Probe KO	Fan operation with the probe present but in error

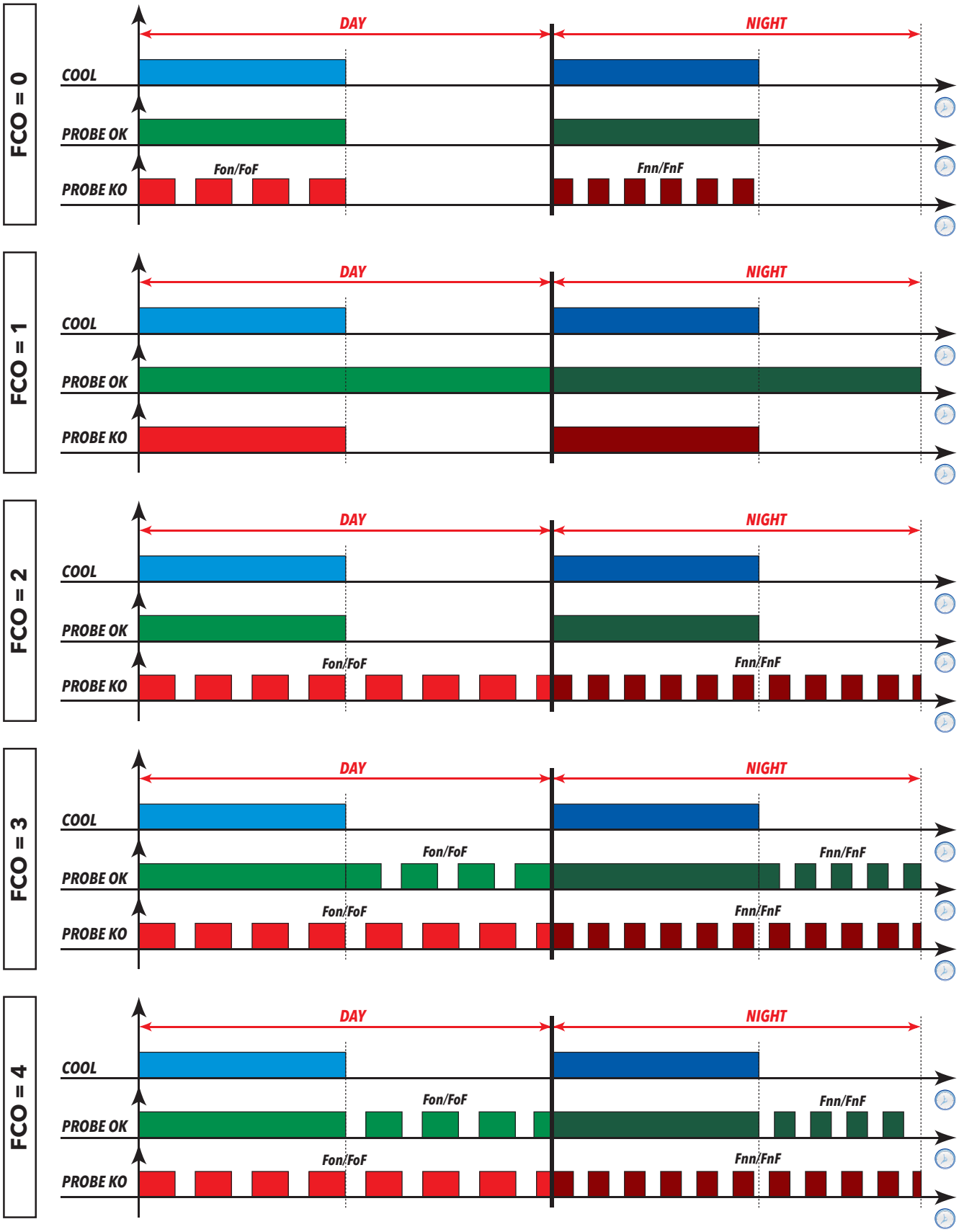
FCO = 0
DAY
NIGHT
COOL
PROBE OK
PROBE KO
Fon/FoF
Fnn/FnF
FCO = 1
DAY
NIGHT
COOL
PROBE OK
PROBE KO
FCO = 2
DAY
NIGHT
COOL
PROBE OK
PROBE KO
Fon/FoF
Fnn/FnF
FCO = 3
DAY
NIGHT
COOL
PROBE OK
PROBE KO
Fon/FoF
Fnn/FnF
Fon/FoF
Fnn/FnF
FCO = 4
DAY
NIGHT
COOL
PROBE OK
PROBE KO
Fon/FoF
Fnn/FnF
Fon/FoF
Fnn/FnF

8.6.2. Fan operation in thermoregulation mode

During “cooling”, the fans operate as shown in this diagram:
Thermostat control of fans takes place at the values set in parameters

- **FSt** (fan stopping temperature)
- **FAd** (fan differential).

The fan disabling temperature, set via parameters **FSt** (fan disabling temperature) and **FAd** (fan differential), is an absolute value as **FPt = 0** (actual temperature value).

NOTE: Around the fan start temperature (-50 °C) the differential will always take account of the parameter **FAd** but with the sign inverted.

The fan regulator operates as indicated below:

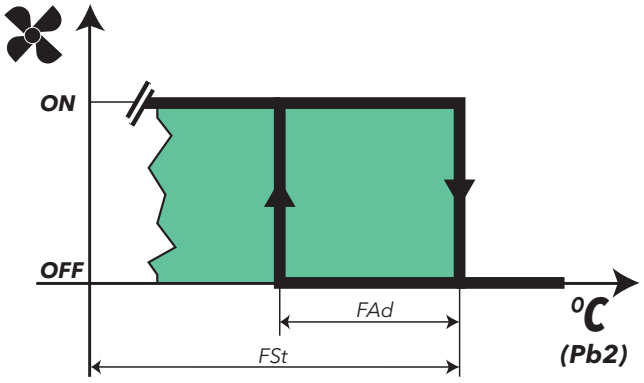

The control probe may be:

- single one for normal regulation and defrost (**FP1** ≠ 0 and **FP2** = 0);
- one specific probe for regulation and one during the defrost phase (**FP1** ≠ 0 and **FP2** ≠ 0).

The fans can be excluded:

- during the defrost;
- if a digital input is configured as a door switch.

When the evaporator fans are enabled during defrost (**FdF** = ON) and the relative probe has an error, the fans are kept on.

If the evaporator probe is not present, and **FdF** = ON, the evaporator fans are active during defrost.
The Energy saving (night) mode is active only if enabled in parameter **ESF** (of course when the controller is in Energy saving).

8.6.3. Fan operation in Duty Cycle mode

There are two Duty Cycle modes:

- **Day** (DAY)
- **Night** (NIGHT - Energy Saving).

The activation of the **Night** mode depends on parameter **ESF**:

ESF = n	Night Mode disabled
ESF = y	Night mode active when Energy Saving mode is active

Duty Cycle operation depends on the operating mode, e.g.:

- **Day**: set the parameters **Fon** and **FoF**;
- **Night**: set the parameters **Fnn** and **FnF**.

The fans operate as follows:

DUTY CYCLE DAY

Fon	FoF	Fan operation
0	0	OFF
0	≠0	OFF
≠0	0	ON
≠0	≠0	DUTY CYCLE DAY

DUTY CYCLE NIGHT

Fnn	FnF	Fan operation
0	0	OFF
0	≠0	OFF
≠0	0	ON
≠0	≠0	DUTY CYCLE NIGHT

The fan regulator will operate in Duty Cycle mode as illustrated below:

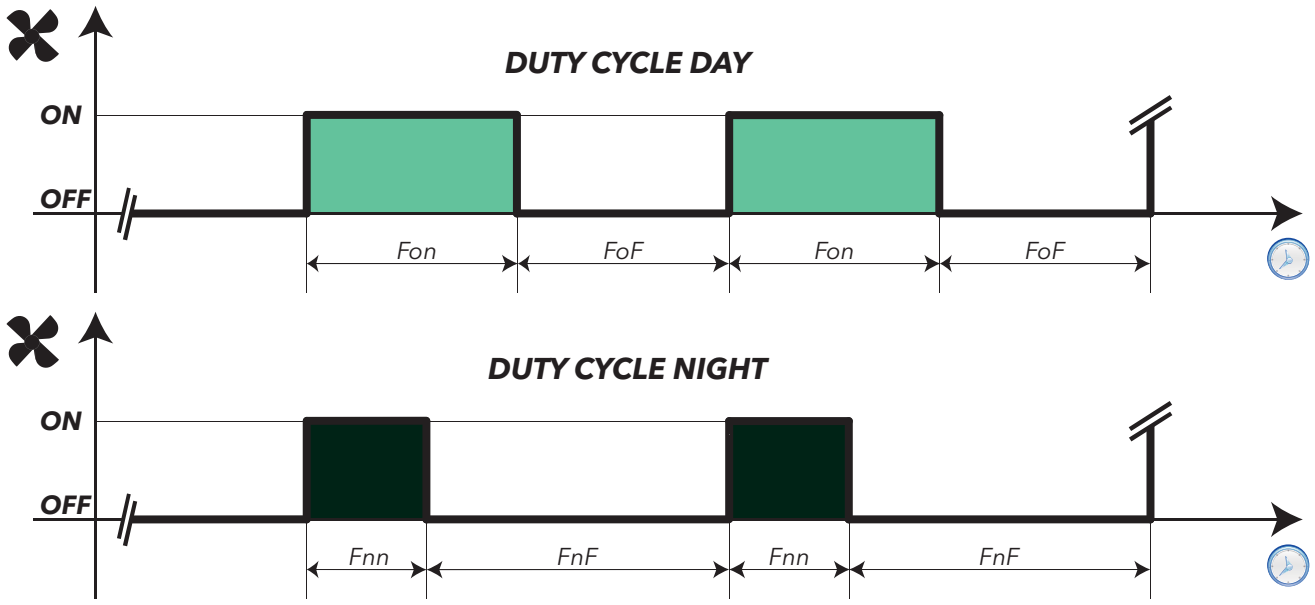

8.6.4. Fan operation in defrost

During defrost, the fans operate as shown in this diagram:

dFd = OFF: exclusion of fans during defrost	**OFF**
dFd = ON: the fans are not excluded during defrost	**ON**

Thermostat control of fans takes place at the values set in parameters:

- **FSt** (fan stopping temperature)
- **FAd** (fan differential).

NOTE: during defrost with electrical heaters, the compressor is OFF but the fans work as if the compressor was still ON, unless they have been disabled during defrost (see parameter **dFd**).

When the evaporator fans are enabled in defrost (**dFd** = On) and regulate the evaporator probe Pb2 in thermoregulated mode, when the latter enters error “E2” during defrost, maintain the fans always ON, regardless of the values set via the Duty Cycle.

8.6.5. Fan operation without probe

If parameter **H42** = n (probe Pb2 absent), depending on the **FCO** value and the status of the compressor, the fans may assume the status “On”, “Off”, “Duty Cycle Day and “Duty Cycle Night”.
The parameter **FCO** will determine the operating mode of the evaporator fans during the DAY phase and the NIGHT phase.
The following is an example of fan operation on the basis of the value set for **FCO**.

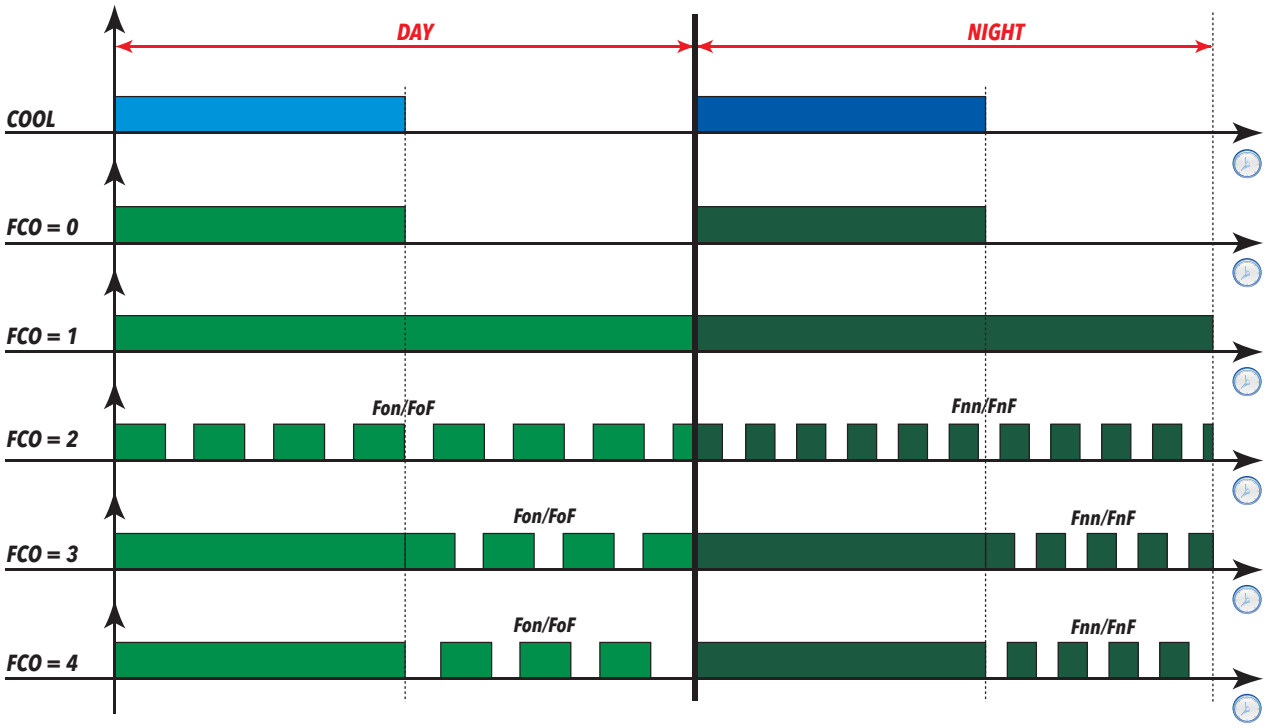

8.6.6. Fan function during dripping

If parameter **dt** ≠ 0 (dripping time), the fans will stay OFF for the time set in this parameter.
Refer to "**Defrost with heaters**".
Note that if **Fdt** (fan delay time) is greater than **dt** (dripping time) the fans stay OFF for the time set in **Fdt** rather than **dt** (e.g. whichever timing is longer will be applied).

8.6.7. Post-ventilation

Parameter **FdC** delays the switching off of the fans after the compressor has stopped (increasing efficiency of the system by making better use of inertia). Post-ventilation is active with any **FCO** value and without a configured probe. If **FdC = 0** the function is disabled.

NOTE: Post-ventilation does not have priority over the delay set by parameter **dcd**.

User parameters

The parameters that manage the fan regulator are:

Label	Description
FPt	Characterises parameter "**FSt**" which can be expressed either as an absolute value or relative to the setpoint
FSt	Evaporator fans disabling temperature
Fdt	Evaporator fans delay after defrost cycle
dFd	Evaporator fans disabling during defrost time
FCO	Evaporator fans operating mode
FAd	Evaporator fans activation differential
dt	Dripping time
FdC	Evaporator fans switch-off delay after compressor disabled
Fon	Evaporator fans ON time in duty cycle day mode
FoF	Evaporator fans OFF time in duty cycle day mode
Fnn	Evaporator fans ON time in duty cycle night mode
FnF	Evaporator fans OFF time in duty cycle night mode
ESF	Night mode activation (Energy saving)

8.7. RTC

8.7.1. Weekdays / holidays

The controller can manage up to two holidays. These are chosen via parameters **Fd1** and **Fd2**.
For example:

EXAMPLE 1: Let's imagine we wish to set only one holiday, for example Monday.
- Set: **Fd1 = 1** (Monday), **Fd2 = 7** (disabled)

EXAMPLE 2: Let's imagine we wish to set two holidays, for example Wednesday and Sunday.
- Set: **Fd1 = 3** (Wednesday), **Fd2 = 0** (Sunday) or
- Set: **Fd1 = 0** (Sunday), **Fd2 = 3** (Wednesday)

8.7.2. Defrost with time bands

The controller can manage up to 6 daily defrosts, with two sets, one applicable to weekdays and another specific one for weekends/holidays.
In addition to the defrost start times, it is possible to decide whether to use a defrost end setpoint, and a time-out the same for all defrosts, or to set a specific value for each event.

If **Edt = 0**, each band will use the same defrost end set **dS1** (and **dS2**) and the same time-out **dE1** (and **dE2**).

If **Edt = 1**, it is possible to define a setpoint **dS1** and a time-out **dE1** specific to each event.

This allows longer and/or more intense defrosts to be set during sales point closures (when there is less thermal load on the cabinets). This mode is advisable for systems with single evaporator defrost.
For double evaporator defrosts, all defrosts use the same **dS2** and **dE2** and cannot be customised.

8.7.3. Periodic defrost

In some cabinets it is sufficient to run a defrost cycle every two / three / … days.
This is possible using the set of periodic defrost parameters, where the activation time and every how many days it is repeated are set.

8.7.4. Events

The controller can manage two specific events, one applicable every weekday and one applicable every holiday. These events have a start time and a duration. A typical example is the sales point closure period, where via the events it is possible to automatically switch the lights off, close the curtains, increase the setpoint and other energy saving functions.
This result is obtained by indicating the time at which the sales point is closed, while the duration of the event is simply the duration of the period of closure.
Every event can run one of the following functions:

- Nothing (function disabled);
- Activate Energy saving mode (*);
- Activation of Energy Saving(*) and light OFF;
- Activation of Energy Saving (*), light OFF and activation of AUX output (e.g. To close the curtains);
- Activation of device stand-by;

(*) for the functions associated to Energy Saving, see the specific section.

8.8. PREHEATER

In the period when the preheat output is active:

- the compressor output and evaporator fans will be forced to OFF;
- the compressor icon (❄) will blink.

If activated during defrost, the Preheater may continue normally, except in defrost modes which require the compressor to be on:

- Cycle inversion (**dty**= 1)
- Hot gas Plug-in (**dty**= 2).

8.9. ENERGY SAVING

The Energy Saving mode (sometimes referred to as night function) is used to activate a series of functions which reduce consumption during the period of closure:

- modification of the weighted average of the virtual probe/switching of the regulation probe;
- increase in setpoint (reduced setpoint);
- modification of the regulation differential;
- modulation of the evaporator fans with setpoint satisfied;
- reduction of power output from the anti-condensation heaters.

The Energy Saving mode can be activated by:

- appropriately configured digital input:
- events from RTC;
- remote control (from supervision and/or via Link[2]);
- key (hotkey).

The light and curtain output (AUX) can be managed by appropriately configuring:

- RTC events (see section on RTC);
- dedicated digital input;
- key (Hotkey);
- remote control (from supervision and/or via Link[2]).

For the “reduced setpoint”, the “evaporator fans” and the “anti-condensation heaters” see the relative section.

8.9.1. Virtual probe/ change probe

In addition to controlling the values for the single probes, the controller can also regulate the weighted average of the value read by two probes, done by what is known as a virtual probe.

- Virtual probe in Day mode:

$$\textbf{Virtual probe} = \frac{(\text{probe 1})^{*}\ \textbf{H72} + (\text{probe 2})^{*}(100 - \textbf{H72})}{100}$$

- Virtual probe in Energy Saving mode (Night):

$$\textbf{Virtual probe} = \frac{(\text{probe 1})^{*}\ \textbf{H73} + (\text{probe 2})^{*}(100 - \textbf{H73})}{100}$$

In the formula, **probe 1** is selected by parameter **H70**, and **probe 2** by parameter **H71**.
The regulation probe change, from DAY mode to NIGHT mode (Energy Saving) is obtained by setting **H72=100** and **H73= 0**:

- Virtual probe in Day mode: **Virtual probe = probe 1**.
- Virtual probe in Energy saving mode (Night): **Virtual probe = probe 2**.

8.10. DEEP COOLING CYCLE - DCC

Description

This regulator means that the compressor regulates the setpoint **dCS**, with differential equal to the value set via parameter **dF1**. When the **DCC** (Deep Cooling Cycle) activates, the interval between defrost cycles is cleared and defrosts disabled.
Ending of the **DCC** is time-based, by setting the parameter **tdc≠0**, or when the setpoint **dCS** is reached if **tdc** = 0.
When a **DCC** has ended and once the time set in parameter **dcc** has elapsed, a defrost cycle is forced and the counters restart for the interval between defrost cycles (value set via parameter **dit**).
If **dcc=0** defrost begins at the end of the **DCC**.
During the **DCC** the temperature alarms are disabled.
Normal temperature alarm management is restored at the end of the **DCC**, when the temperature value read by probe **rP1** reaches the regulation setpoint value **SP1**.

Operating conditions

The Deep Cooling Cycle can be run:

- from Digital Input (where appropriately configured)
- from a key (where appropriately configured)
- remotely (supervisor).

In the event of a probe error and/or power outage, the Deep Cooling Cycle is stopped and standard controller function restored. If parameters **dCS**, **tdc** and **dCC** are modified, the Deep Cooling Cycle is recalculated with the new values set.

NOTE: After a Deep Cooling Cycle, wait until the **dCC** time is elapsed before a new cycle can begin.

The control diagram is as follows:

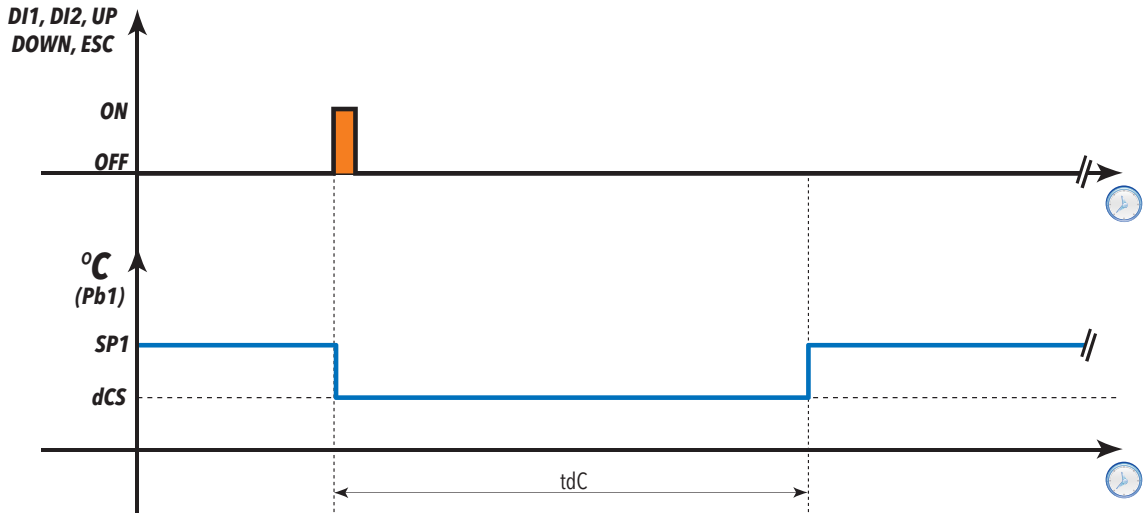

User parameters

The parameters that manage the fan regulator are:

Label	Description
dCS	Deep Cooling Setpoint
tdc	Deep Cooling Time
dcc	Defrost Delay after Deep Cooling.

8.11. AUXILIARY OUTPUT (AUX/LIGHT)

Description

If one of the parameters **H21...H27** is set to the value **5**, it anticipates the relay control as AUX and, by pressing the associated key **H31...H37** (active if it is set to the value **5**), the relay is activated if it was off previously and vice-versa.
The on/off status is saved in non-volatile memory hence when power returns after a blackout, the device will restart in the status that was active prior to the blackout.
If one of the parameters **H11**...**H18** is set to the value **5**, it anticipates the AUX relay control by the digital input; in this case the relay will mirror the status of the input. In this case, on/off status is not saved in non-volatile memory.

NOTE: maintain always the same meaning of the DI: for example, if the relay is activated by DI and switched off by key, when the DI is reset to the starting position, the relay does not change status (since it was already de-energised by key). With the instrument OFF, if set accordingly, only the digital input (DI) and the associated key can change the status of the output.

Operating conditions

The regulator is activated by:

- from Digital Input (where appropriately configured)
- from a key (where appropriately configured)
- from a Function
- from activate Energy Saving mode

The regulator is not active when:

Condition	AUX output status
during start-up	OFF
during stand-by	status depending on parameter H08

The control diagram is as follows:

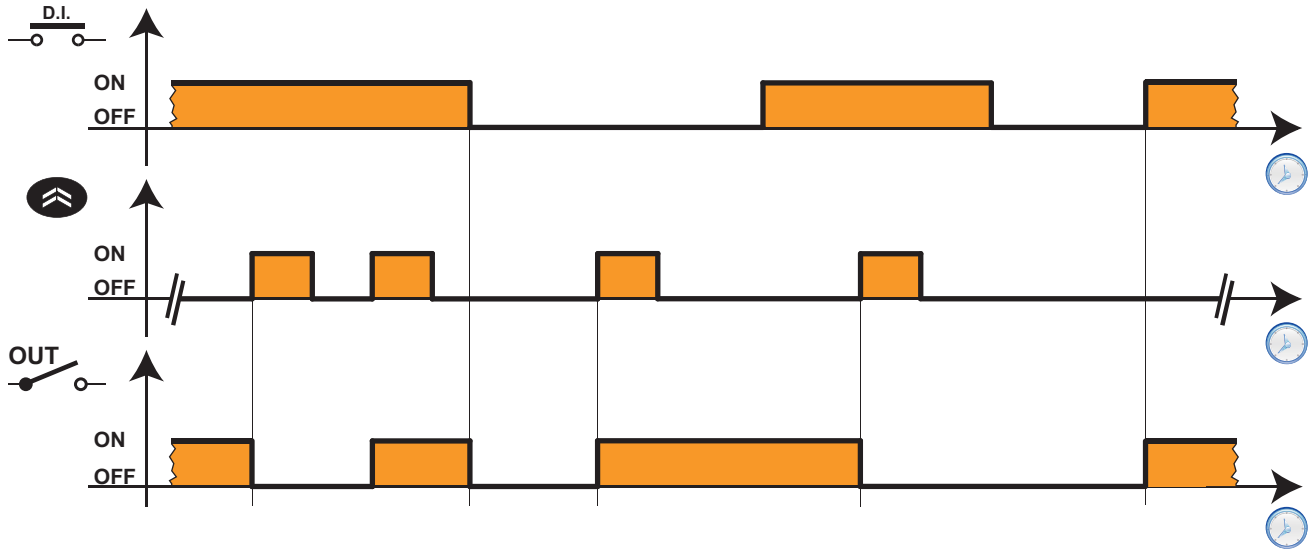

User parameters

The parameters that manage the auxiliary (AUX) output regulator are:

Label	Description
H08	Stand-by operating mode
H11...H18	Configuration of digital input 1...8 / Polarity
H21...H27	Configuration of digital output 1...7
H31...H37	Configuring keys 1...7

8.12. EXTERNAL ALARM/DOOR MANAGEMENT

The door switch input is associated to an appropriately configured digital input (one of the parameters **H11...H18** is set to the value **±4**).
By controlling the opening of the door, it is possible to deactivate the compressor output and/or the fans.
It is also possible to associate a deactivation delay to the compressor output by means of parameter **dCO**.
If the door is opened during a defrost cycle, the cycle is not shut down.
The values that can be set for the parameters involved are:

- **dod**: Door switch switches off loads on DI command.
  Any protective timers (e.g. compressor start delay, etc.) will still be observed.
  - **0** = function disabled
  - **1** = disables Fans (FAN)
  - **2** = disables the Compressor (COMP)
  - **3** = disables the Compressor (COMP) and Fans (FAN)
- **EAL**: Locks compressor, defrost and fan regulators if the digital input (configured as external alarm) is activated.
  - **0** = no resource locked
  - **1** = Compressor and Defrost locked
  - **2** = Compressor, Defrost and Fans locked
- **dOA**: Establishes what should be activated/deactivated on activation/deactivation of the digital input (Only if **PEA** ≠ 0).
  - **0** = activates the Compressor (COMP)
  - **1** = activates Fans (FAN)
  - **2** = activates the Compressor (COMP) and Fans (FAN)
  - **3** = disables the Compressor (COMP)
  - **4** = disables the Fans (FAN)
  - **5** = disables the Compressor (COMP) and Fans (FAN)
- **PEA**: Establishes which of the door switch and alarm should be linked to the parameter **dOA** in the following way:
  - **0** = function disabled
  - **1** = function linked to door switch
  - **2** = function linked to external alarm
  - **3** = function linked to door switch and external alarm
- **dCO**: Compressor resource activation/power off delay (0 ... 250 min).
- **dFO**: Evaporator Fan resource activation/power off delay (0 ... 250 min).
- **tdO**: Door open alarm exclusion time (0 ... 250 min). The door open alarm will be activated if the door remains open for a time period greater than the setting for this parameter.

The way in which parameters **dCO** and **dFO** act depends on how the parameter **dOA** is configured. To better understand the meaning of these parameters, refer to the figures below.

The graphs below illustrate fan operation on the basis of the **doA** value.
In the graphs, we can see that:

	Door
	Evaporator fans
	Compressor

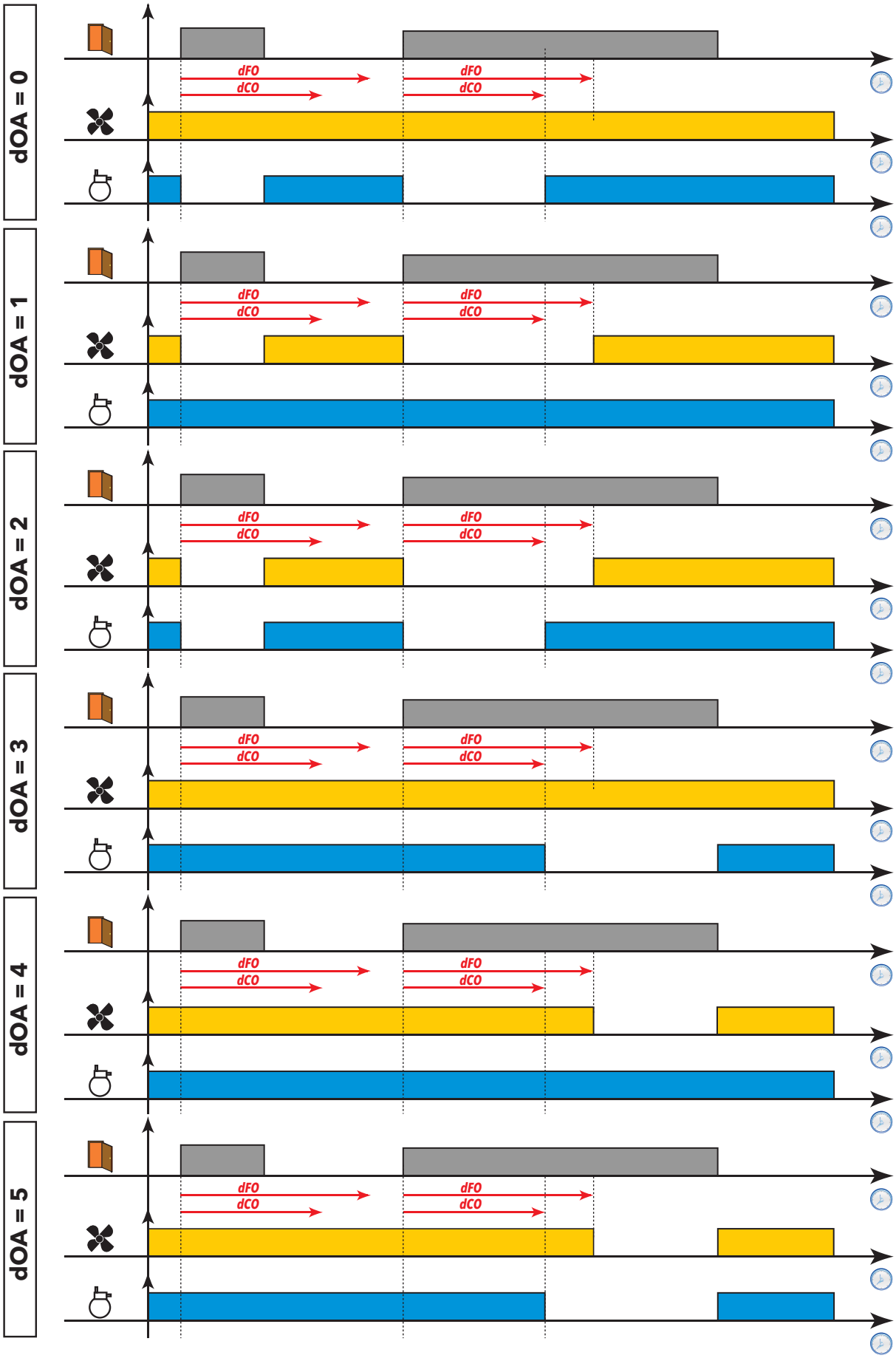
dOA = 0
dOA = 1
dOA = 2
dOA = 3
dOA = 4
dOA = 5
dFO
dCO

8.13. FRAME HEATERS (FH)

This regulator makes it possible to activate the anti-condensation heaters of a display window or refrigerated cabinet.

Control can be:

- With fixed Duty Cycle (only if **FH** = dc)
- Proportional to temperature
- Proportional to the difference between the temperature and the DewPoint from remote.

The device is used to pilot Frame Heater via:

- External SSR relay with Open Collector output
- External module with analogue input (0...10 V, 4...20 mA).

8.13.1. Example of connections

Some examples of connections are as follows:

FH with external SSR relay

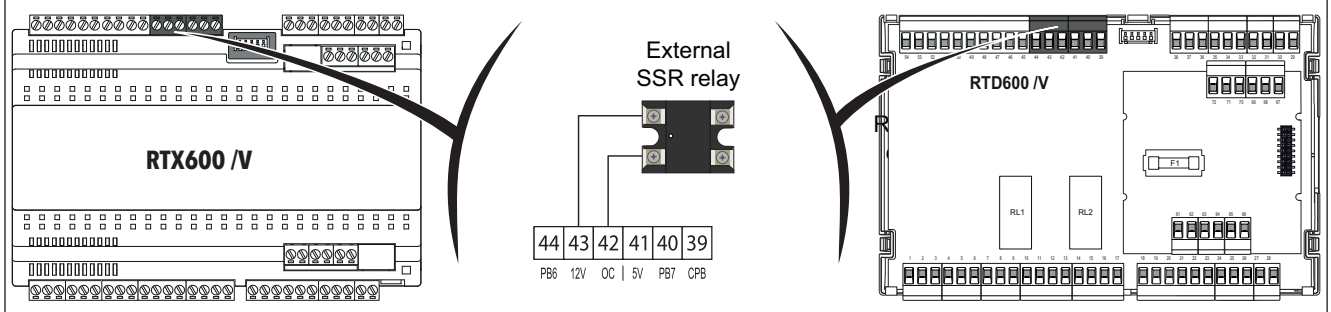

FH with CFS-xx/I on 4...20 mA output

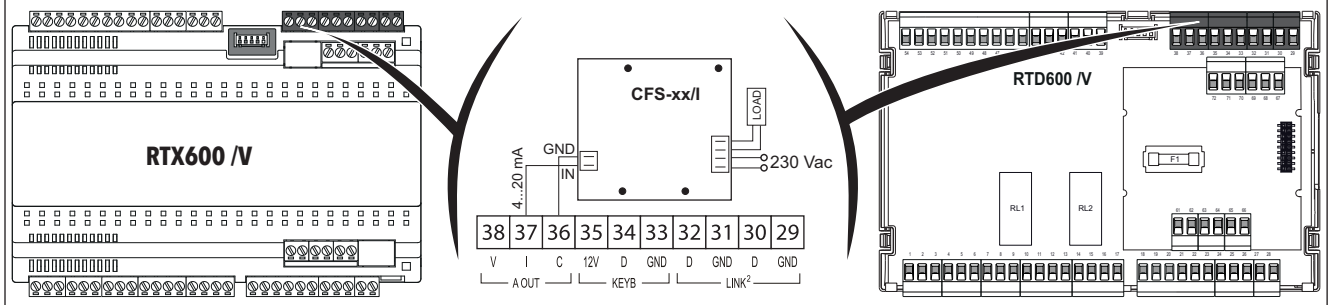

Modules CFS-xx/I control the voltage of a load and have input values of I = 4...20 mA.

FH with CFS-xx/V on 0...10 V output

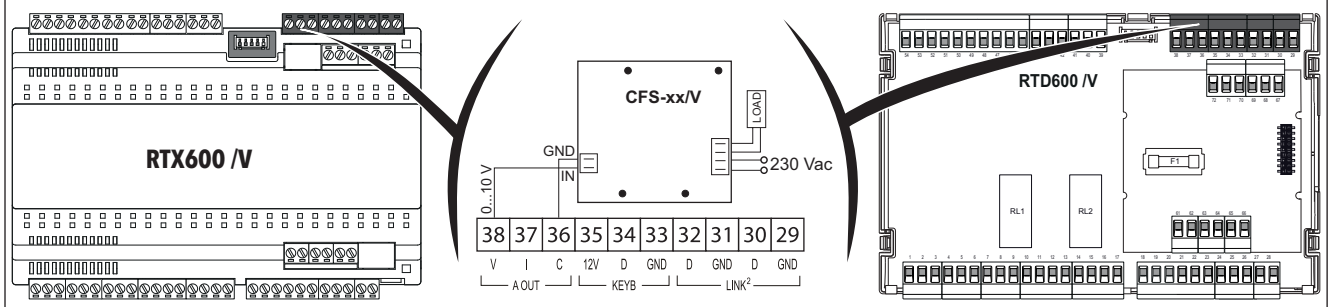

Modules CFS-xx/I control the voltage of a load and have input values of V = 0...10 V.

8.13.2. Fixed duty cycle regulation

Fixed Duty Cycle regulation is done via parameter **FH** = dc and sets a fixe actuation percentage from the parameter, according to the following regulation percentages:

- Parameter **FH4**: Day (Day)
- Parameter **FH5**: Night (Energy Saving)
- Parameter **FH6**: Defrost (both Day and Night)

When using the open collector output (or relay, although this is not recommended), the regulation takes place via modulation, where parameter **FHt** sets the modulation period.

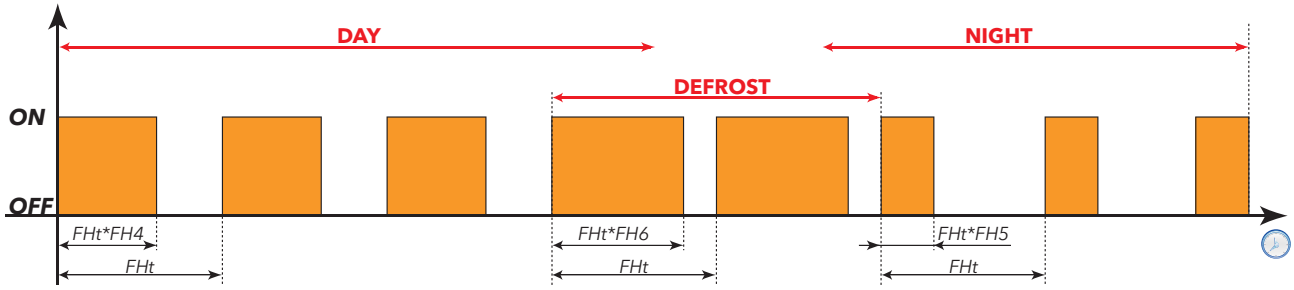

It is also possible to use the analogue output (4…20 mA / 0…10 V).
In this case the output value will remain fixed at the regulation percentage of the respective phases.

8.13.3. Proportional temperature regulation

Proportional temperature regulation is done by selecting in parameter **FH**, the required probe (**diS**=disabled; **dc**=Duty Cycle; **Pb1**...**Pb5**=probe Pb1...Pb5; **Pbi**=virtual probe; **PFi**=filtered virtual probe).

The output value depends on the value of the probe according to the following graphs:

FH4 > FH3 (Day) - FH5 > FH3 (Night)

DAY CYCLE

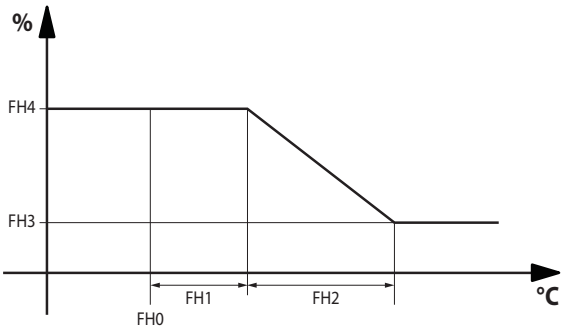

NIGHT CYCLE

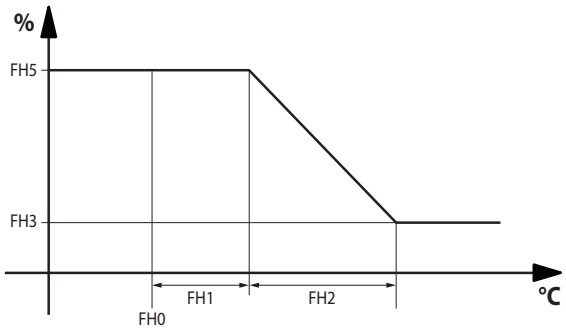

FH4 < FH3 (Day) - FH5 < FH3 (Night)

DAY CYCLE

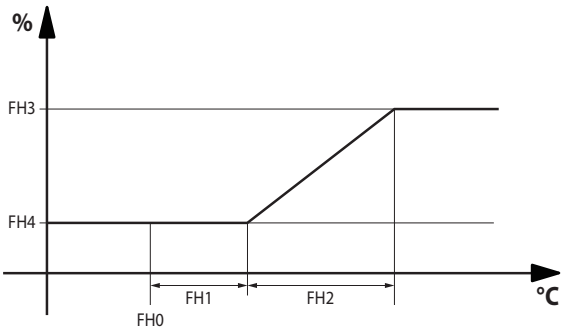

NIGHT CYCLE

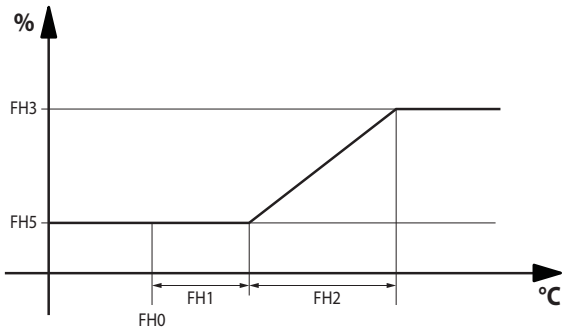

During defrost the output will be set to the fixed value indicated in parameter **FH6**.

In the event of a probe error, the output will be positioned on the maximum value (**FH4** day, **FH5** night - Energy Saving).

The regulator can go to modulate the analogue output (4…20 mA / 0…10 V), or go to modulate the Open Collector output (in this case the period is given by parameter **FHt**).

NOTE: The analogue output (4…20 mA / 0…10 V) does not use parameter **FHt**.

NOTE: The counter managing the timers in parameter **FHt** (according to parameters **FH4**, **FH5**, **FH6**) is not reloaded immediately on state change (Day, Night, Defrost); wait until the current count is completed.

8.13.4. Proportional temperature regulation with dewpoint

The regulation is very similar to what stated in the previous section, the only difference being the setpoint value **FH0** which is modified remotely (remote dewpoint) and is managed by the Supervisor via serial commands.

On start-up the regulator loads the setpoint value indicated in parameter **FH0**.

The regulation setpoint value can be updated from remote (value in volatile memory).

NOTE: Sent the remote updating within 60 seconds otherwise the regulator will reload the value of parameter **FH0**.

User parameters

The parameters that manage the stand-by regulator are:

Label	Description
FH	Selects which probe will be used by the anti-condensation heaters (Frame Heaters).
FHt	Duration of Frame Heaters (FH) operation, only used when OC (Open Collector) output is used with SSR relay.
FH0	Setpoint setting of the anti-condensation heaters (Frame Heaters).
FH1	Offset setting of the anti-condensation heaters (Frame Heaters).
FH2	Band setting of the anti-condensation heaters (Frame Heaters).
FH3	Minimum percentage setting of the anti-condensation heaters (Frame Heaters).
FH4	Sets maximum percentage for day Duty Cycle.
FH5	Sets maximum percentage for night-time Duty Cycle.
FH6	Setting of percentage during defrost.

8.14. GENERIC INPUT

The generic input has no local function in the controller.

Its function consists in being able to remotely monitor the state of that input to which the output of a specific device/sensor is associated.

EXAMPLE:

The generic input can be connected to the output of an ice sensor to monitor whether the cold cabinet drain (e.g. fruit and vegetable cabinet) is blocked.
In this case, during defrosts as the water cannot flow out it pools and ices, slowly blocking the evaporator. Via an ice presence sensor it is possible to monitor whether the cavity between the evaporator and the bottom of the cabinet is blocked by ice.

8.15. STAND-BY

Operating conditions

The stand-by regulator can be activated by digital input (if configured) or by key (if programmed).

With the device OFF the display shows “OFF” and all regulators are blocked including alarms.

When the device is switched on via a key or an appropriately configured digital input, regular operation commences, the same as from power-on.
After power-on, the temperature alarm is excluded for a time set in parameter **PAO**, and the delay set by parameter **OdO** is activated.
Each time that the device is switched off, all cycle times are reset.
The on/off status is saved in non-volatile memory hence when power returns after a blackout, the device will restart in the status that was active prior to the blackout.
The output from stand-by is linked to the delay set in parameter **OdO**.

NOTE: With the device off, all relays are de-energized except for AUX: button/AUX input-light-door switch are active.

User parameters

The parameters that manage the stand-by regulator are:

Label	Description
PAO	Alarm disabling after power-on
OdO	Output activation delay from power-on
OAO	High/low temperature alarm exclusion time after door closing

8.16. SOFT START REGULATION

The soft start requires the opening of the hot gas valve just before the compressor starts, to reduce the pressure differential and consequently demand less torque from the compressor.

After the compressor starts the valve will be closed.

The regulation parameters are **SS1** and **SS2**.

Parameter **SS1** is used to set the time in seconds from the opening of the hot gas valve and the start of the compressor. This counter starts when all the protection times relative to the compressor start-up, have expired.

Parameter **SS2** is used to set the time in seconds from the start of the compressor and the closure of the hot gas valve.

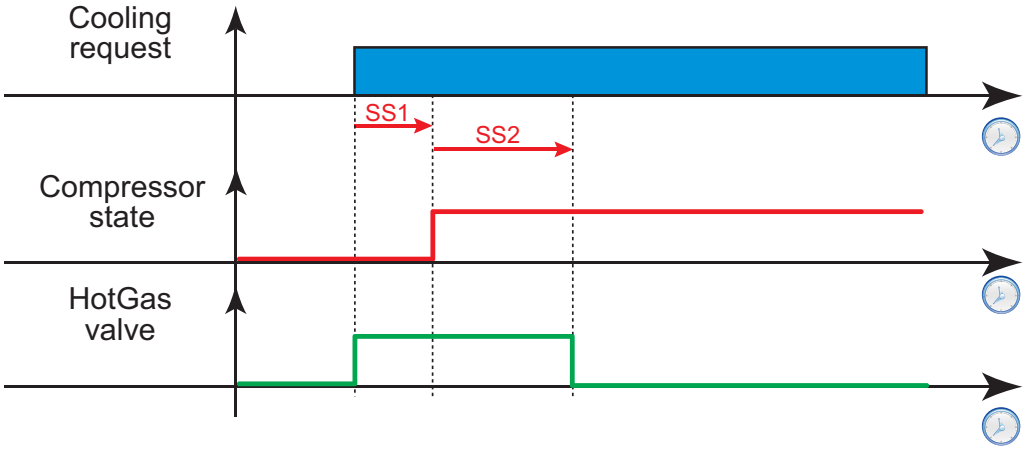

The HotGas valve is the same valve used for hot gas defrost (defrost output 1).

The valve will be activated if at least one of the two timers set in parameters **SS1** and **SS2** is different from zero.

8.17. CABINET CLEANING FUNCTION

This function is used for cabinet maintenance and implements a machine with 2 states:

- function activating
- state progress by pressing the associated key (one of the parameters **H31...H37** set to value **9**).

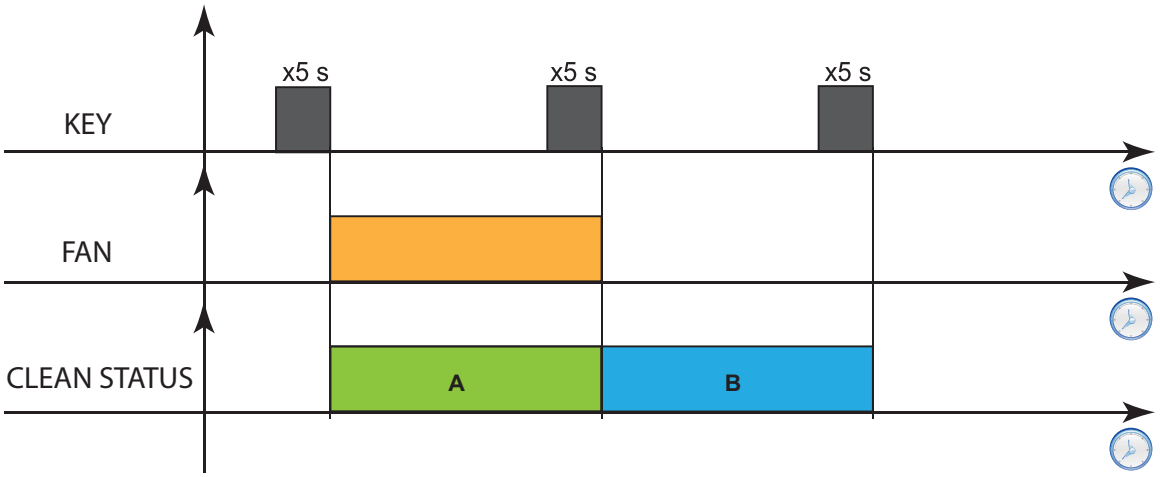

During normal operation:

- Press the associated key (**KEY**) to enter the “Cleaning state 1” mode (**A**) and:
  - Fans on and all other loads deactivated
  - Fans icon (**FAN**) on
  - Display shows label **CLn**
- Press the associated key (**KEY**) again to move to “Cleaning state 2” mode (**B**) with:
  - All loads deactivated
  - Display shows label **CLn**
- Press the associated key (**KEY**) a third time to exit the cabinet Cleaning function and return to normal operation

In the event of a power outage, when switching on the power again the device returns to normal operation (the function is cancelled).

CHAPTER 9
PARAMETERS

9.1. PARAMETER TABLE

The table below gives the parameters of the **RTX-RTD 600 /V** indicating their visibility level (**LIV**):

- LEV. = 1 → Parameter visible at "**User**" level
- LEV. = 2 → Parameter visible at "**Installer**" level
- LEV. = 1&2 → Parameter visible at "**User**" and "**Installer**" level

NOTES: • the parameters and visibility pre-loaded in the instrument are those in the application **AP1**.
• parameters with grey background ( ) are not in the applications and do not change if another application **AP1...AP8** is loaded.

PAR.	DESCRIPTION	M.U.	RANGE	AP1 AP3...AP8	LEV.	AP2	LEV.
	COMPRESSOR (CP)						
rE	Sets the type of control to be used: **0**: single thermostat; **1**: double thermostat series; **2**: double thermostat parallel; **3**: reserved; **4**: double thermostat with two independent regulators; **5**: continuous modulation.	num	0...5	0	2	0	2
rP1	Sets the probe used by thermostat 1. **diS** (0) = disabled; **Pb1** (1) = Pb1 probe; **Pb2** (2) = Pb2 probe; **Pb3** (3) = Pb3 probe; **Pb4** (4) = Pb4 probe; **Pb5** (5) = Pb5 probe; **Pbi** (6) = virtual probe; **LP** (7) = remote probe (Link[2]); **PFi** (8) = filtered virtual probe (see **H74**).	num	diS, Pb1...Pb5, Pbi, LP, PFi	Pb1	1&2	Pb1	1&2
rP2	Sets the probe used by thermostat 2 (only if **rE** ≠ 0). Same as **rP1**.	num	diS, Pb1...Pb5, Pbi, LP, PFi	diS	2	diS	2
SP1	Thermostat 1 regulation setpoint.	°C/°F	LS1...HS1	0.0	1&2	0.0	1&2
dF1	Activation differential of the first thermostat (absolute or relative). **NOTE**: diF cannot be equal to 0.	°C/°F	-58.0...302	2.0	1&2	2.0	1&2
SP2	Thermostat 2 regulation setpoint (only if **rE** ≠ 0).	°C/°F	LS2...HS2	0.0	2	0.0	2
dF2	Activation differential of the second thermostat (absolute or relative) (only if **rE**≠0). N.B.: diF cannot be equal to 0.	°C/°F	-58.0...302	0.0	2	0.0	2
Stt	Management mode of differentials **dF1** and **dF2**. **AbS** (0) = absolute value; **rEL** (1) = relative value.	flag	AbS/rEL	rEL	2	rEL	2
HS1	Maximum value assignable to setpoint SP1. **NOTE**: The two setpoints are interdependent: HS1 cannot be less than LS1 and vice versa.	°C/°F	LS1...HdL	20.0	1&2	20.0	1&2
LS1	Minimum value assignable to setpoint SP1. **NOTE**: The two setpoints are interdependent: LS1 cannot be greater than HS1 and vice versa.	°C/°F	LdL...HS1	-35.0	1&2	-35.0	1&2
HS2	Maximum value assignable to setpoint SP2 (only if **rE** ≠ 0). **NOTE**: The two setpoints are interdependent: HS2 cannot be less than LS2 and vice versa.	°C/°F	LS2...HdL	0.0	2	0.0	2
LS2	Minimum value assignable to setpoint SP2 (only if **rE** ≠ 0). **NOTE**: The two setpoints are interdependent: LS2 cannot be greater than HS2 and vice versa.	°C/°F	LdL...HS2	0.0	2	0.0	2
HC1	Selection of thermostat 1 regulation mode. **C** (0) = Cold, **H** (1) = Hot.	flag	C/H	C	2	C	2

PAR.	DESCRIPTION	M.U.	RANGE	AP1 AP3...AP8	LEV.	AP2	LEV.
HC2	Selection of thermostat 2 regulation mode (only if **rE** ≠ 0). **C** (0) = Cold, **H** (1) = Hot.	flag	C/H	C	2	C	2
Cit	Minimum activation time of compressor before possible deactivation. If **Cit** = 0 not active.	min	0...250	0	2	0	2
CAt	Maximum activation time of compressor before possible deactivation. If **CAt** = 0 not active.	min	0...250	0	2	0	2
Ont	Controller switch-on time in the event of error probe. If **Ont** = 1 and **OFt** = 0, the compressor stays on permanently (ON). If **Ont** > 0 and **OFt** > 0, it operates in Duty Cycle mode.	min	0...250	3	1&2	3	1&2
OFt	Controller switch-off time in the event of error probe. If **OFt** = 1 and **Ont** = 0, the compressor will always stay off (OFF). If **Ont** > 0 and **OFt** > 0, it operates in Duty Cycle mode.	min	0...250	3	1&2	3	1&2
dOn	Delay between switch-ons; Wait the time indicated between two consecutive compressor power-ons.	s	0...250	0	2	0	2
dOF	Delay time after power-off: Wait the time indicated between deactivation of the compressor relay and the next power-on.	min	0...250	0	2	0	2
dbi	Delay between switch-ons; wait the time indicated between two consecutive compressor power-ons.	min	0...250	0	2	0	2
OdO	Delay in activating outputs after the device is switched on or after a power outage. **0** = not active.	min	0...250	0	1&2	0	1&2
OF1	Represents the (Offset) value which will be added or not to the thermostat 1 setpoint (SP1) in the presence of remote controls: **nOS** = Activation of setpoint offset forcing (**SEt** = **SP1**+**OF1**) **nOS** = Disactivation of setpoint offset forcing (**SEt** = **SP1**)	°C/°F	-50.0...50.0	0.0	2	0.0	2
SS1	Compressor Softstart: hotgas valve opening advance. Sets the delay time between the opening of the hot gas valve and the start of the compressor.	s	0...250	0	2	0	2
SS2	Compressor Softstart: hotgas valve opening delay. Sets the delay time between the start of the compressor and the closure of the hot gas valve.	s	0...250	0	2	0	2
	DEFROST (dEF)						
dP1	Sets the probe used by defrosting 1: **diS** (0) = disabled; **Pb1** (1) = Pb1 probe; **Pb2** (2) = Pb2 probe; **Pb3** (3) = Pb3 probe; **Pb4** (4) = Pb4 probe; **Pb5** (5) = Pb5 probe; **Pbi** (6) = virtual probe; **LP** (7) = remote probe; **PFi** (8) = filtered virtual probe (see **H74**).	num	diS, Pb1...Pb5, Pbi, LP, PFi	Pb2	1&2	Pb2	1&2
dP2	Sets the probe used by defrosting 2. Same as **dP1**.	num	diS, Pb1...Pb5, Pbi, LP, PFi	diS	2	diS	2
dty	Type of defrost **0** = electric defrost (using heaters) or air defrost; **1** = reverse cycle defrost; **2** = hot gas defrost for plug-in applications (with integrated compressor); **3** = hot gas defrost for applications with remote control (e.g. ducted counters); **4** = electric defrost (via heaters) or air defrost with energy saving algorithms (smart defrost).	num	0...4	0	1&2	0	1&2
dFt	Defrost activation mode using 2 probes: **0** = activation linked to probe 1 only; **1** = activation in response to at least one of the two probes; **2** = activation in response to both probes.	num	0/1/2	0	2	0	2
dit	Interval between the start of two consecutive defrost cycles. **0** = function disabled (defrost NEVER performed).	see **dt1**	0...250	24	1&2	6	1&2

PAR.	DESCRIPTION	M.U.	RANGE	AP1 AP3...AP8	LEV.	AP2	LEV.
dt1	Unit of measurement for defrost interval (parameter **dit**). **0** = hours; **1** = minutes; **2** = seconds.	num	0/1/2	0	2	0	2
dt2	Unit of measurement for duration of defrost (parameters **dE1**/**dE2**). (only if **dFt** ≠ 0). **0** = hours; **1** = minutes; **2** = seconds.	num	0/1/2	1	2	1	2
dCt	Selects the count mode for the defrost interval: **0** = defrost disabled; **1** = compressor running time (DIGIFROST® method); defrost active ONLY when the compressor is on; **NOTE**: compressor running hours are counted separately from the evaporator probe (count active also when evaporator probe missing or inoperable). **2** = appliance running time; counting is always active when the machine is on and starts at each power-on; **3** = compressor stop. Every time the compressor stops, a defrost cycle is performed according to parameter **dtY**; **4** = RTC; **5** = temperature.	num	0...5	4	1&2	2	1&2
dOH	Delay preceding start of first defrost after call.	min	0...250	0	2	0	2
dE1	Evaporator 1 defrost timeout. Sets the maximum defrost time on Evaporator 1.	see **dt2**	1...250	30	1&2	30	1&2
dE2	Evaporator 1 defrost time-out (only if **dFt** ≠ 0). Sets the maximum defrost time on Evaporator 2.	see **dt2**	1...250	30	2	30	2
dS1	Defrost 1 end temperature (only if **dP1** ≠ diS).	°C/°F	-58.0...302	7.0	1&2	7.0	1&2
dS2	Defrost 2 end temperature (only if **dP2** ≠ diS).	°C/°F	-58.0...302	7.0	2	7.0	2
dSS	Start defrost temperature threshold (only if **dCt** = 5).	°C/°F	-58.0...302	-5.0	1&2	-5.0	1&2
dPO	Determines whether or not the device defrost at power-up (provided that the temperature measured at the evaporator will allows defrost). **no** (0) = no, does not defrost on power-up; **yES** (1) = yes, defrost on power-on.	flag	no/yES	no	1&2	no	1&2
tcd	Minimum time period with the compressor ON or OFF before defrost is activated.	min	-60...60	0	2	0	2
ndE	Minimum defrost duration. **NOTE**: If **dtY**=0, **dtY**=1 or **dtY**=4, set **ndE**=0.	min	0...250	0	2	0	2
PdC	Hot gas extraction time at defrost end.	min	0...250	0	2	0	2
tPd	Minimum pump down time before defrost starts.	min	0...255	0	2	0	2
dPH	Periodic defrost start hour (only if **dCt** = 4). **0...23** = start hour; **24** = disabled.	hours	0...24	24	1&2	24	1&2
dPn	Periodic defrost start minutes (only if **dCt** = 4).	min	0...59	0	1&2	0	1&2
dPd	Interval between one periodic defrost and the next (only if **dCt**=4).	days	1...7	1	1&2	1	1&2
Fd1	Holiday 1 (only if **dCt** = 4). **0...6** = start day; **7** = disabled	days	0...7	7	1&2	7	1&2
Fd2	Holiday 2 (only if **dCt** = 4). **0...6** = start day; **7** = disabled.	days	0...7	7	1&2	7	1&2
Edt	Sets whether you wish to enter the duration and temperature for defrost end of each event (only if **dCt** = 4). **no** (0) = values all the same; **yES** (1) = customised values for each event.	flag	no/yES	0	2	0	2
d1H	Weekday defrost 1 start hour (only if **dCt** = 4). **0...23** = start hour; **24** = disabled.	hours	0...24	0	1&2	0	1&2
d1n	Weekday defrost 1 start minutes (only if **dCt** = 4).	min	0...59	0	1&2	0	1&2
d1t	Weekday defrost 1 duration (only if **dCt** = 4).	min	0...250	0	2	0	2
d1S	Weekday defrost 1 end temperature (only if **dCt** = 4).	°C/°F	-58.0...302	0	2	0	2
d2H	Weekday defrost 2 start hour (only if **dCt** = 4). **d1H...23** = start hour; **24** = disabled.	hours	d1H...24	6	1&2	24	1&2
d2n	Weekday defrost 2 start minutes (only if **dCt** = 4).	min	0...59	0	1&2	0	1&2
d2t	Weekday defrost 2 duration (only if **dCt** = 4).	min	0...250	0	2	0	2

PAR.	DESCRIPTION	M.U.	RANGE	AP1 AP3...AP8	LEV.	AP2	LEV.
d2S	Weekday defrost 2 end temperature (only if **dCt** = 4).	°C/°F	-58.0...302	0	2	0	2
d3H	Weekday defrost 3 start hour (only if **dCt** = 4). **d2H...23** = start hour; **24** = disabled.	hours	d2H...24	12	1&2	24	1&2
d3n	Weekday defrost 3 start minutes (only if **dCt** = 4).	min	0...59	0	1&2	0	1&2
d3t	Weekday defrost 3 duration (only if **dCt** = 4).	min	0...250	0	2	0	2
d3S	Weekday defrost 3 end temperature (only if **dCt** = 4).	°C/°F	-58.0...302	0	2	0	2
d4H	Weekday defrost 4 start hour (only if **dCt** = 4). **d3H...23** = start hour; **24** = disabled.	hours	d3H...24	18	1&2	24	1&2
d4n	Weekday defrost 4 start minutes (only if **dCt** = 4).	min	0...59	0	1&2	0	1&2
d4t	Weekday defrost 4 duration (only if **dCt** = 4).	min	0...250	0	2	0	2
d4S	Weekday defrost 4 end temperature (only if **dCt** = 4).	°C/°F	-58.0...302	0	2	0	2
d5H	Weekday defrost 5 start hour (only if **dCt** = 4). **d4H...23** = start hour; **24** = disabled.	hours	d4H...24	24	1&2	24	1&2
d5n	Weekday defrost 5 start minutes (only if **dCt** = 4).	min	0...59	0	1&2	0	1&2
d5t	Weekday defrost 5 duration (only if **dCt** = 4).	min	0...250	0	2	0	2
d5S	Weekday defrost 5 end temperature (only if **dCt** = 4).	°C/°F	-58.0...302	0	2	0	2
d6H	Weekday defrost 6 start hour (only if **dCt** = 4). **d5H...23** = start hour; **24** = disabled.	hours	d5H...24	24	1&2	24	1&2
d6n	Weekday defrost 6 start minutes (only if **dCt** = 4).	min	0...59	0	1&2	0	1&2
d6t	Weekday defrost 6 duration (only if **dCt** = 4).	min	0...250	0	2	0	2
d6S	Weekday defrost 6 end temperature (only if **dCt** = 4).	°C/°F	-58.0...302	0	2	0	2
F1H	Holiday defrost 1 start hour (only if **dCt** = 4). **0...23** = start hour; **24** = disabled.	hours	0...24	0	1&2	24	1&2
F1n	Holiday defrost 1 start minutes (only if **dCt** = 4).	min	0...59	0	1&2	0	1&2
F1t	Weekend/holiday defrost 1 duration (only if **dCt** = 4).	min	0...250	0	2	0	2
F1S	Weekend/holiday defrost 1 end temperature (only if **dCt** = 4).	°C/°F	-58.0...302	0	2	0	2
F2H	Holiday defrost 2 start hour (only if **dCt** = 4). **F1H...23** = start hour; **24** = disabled.	hours	F1H...24	6	1&2	24	1&2
F2n	Holiday defrost 2 start minutes (only if **dCt** = 4).	min	0...59	0	1&2	0	1&2
F2t	Weekend/holiday defrost 2 duration (only if **dCt** = 4).	min	0...250	0	2	0	2
F2S	Weekend/holiday defrost 2 end temperature (only if **dCt** = 4).	°C/°F	-58.0...302	0	2	0	2
F3H	Holiday defrost 3 start hour (only if **dCt** = 4). **F2H...23** = start hour; **24** = disabled.	hours	F2H...24	12	1&2	24	1&2
F3n	Holiday defrost 3 start minutes (only if **dCt** = 4).	min	0...59	0	1&2	0	1&2
F3t	Weekend/holiday defrost 3 duration (only if **dCt** = 4).	min	0...250	0	2	0	2
F3S	Weekend/holiday defrost 3 end temperature (only if **dCt** = 4).	°C/°F	-58.0...302	0	2	0	2
F4H	Holiday defrost 4 start hour (only if **dCt** = 4). **F3H...23** = start hour; **24** = disabled.	hours	F3H...24	18	1&2	24	1&2
F4n	Holiday defrost 4 start minutes (only if **dCt** = 4).	min	0...59	0	1&2	0	1&2
F4t	Weekend/holiday defrost 4 duration (only if **dCt** = 4).	min	0...250	0	2	0	2
F4S	Weekend/holiday defrost 4 end temperature (only if **dCt** = 4).	°C/°F	-58.0...302	0	2	0	2
F5H	Holiday defrost 5 start hour (only if **dCt** = 4). **F4H...23** = start hour; **24** = disabled.	hours	F4H...24	24	1&2	24	1&2
F5n	Holiday defrost 5 start minutes (only if **dCt** = 4).	min	0...59	0	1&2	0	1&2
F5t	Weekend/holiday defrost 5 duration (only if **dCt** = 4).	min	0...250	0	2	0	2
F5S	Weekend/holiday defrost 5 end temperature (only if **dCt** = 4).	°C/°F	-58.0...302	0	2	0	2
F6H	Holiday defrost 6 start hour (only if **dCt** = 4). **F5H...23** = start hour; **24** = disabled.	hours	F5H...24	24	1&2	24	1&2
F6n	Holiday defrost 6 start minutes (only if **dCt** = 4).	min	0...59	0	1&2	0	1&2
F6t	Weekend/holiday defrost 6 duration (only if **dCt** = 4).	min	0...250	0	2	0	2
F6S	Weekend/holiday defrost 6 end temperature (only if **dCt** = 4).	°C/°F	-58.0...302	0	2	0	2

<table>
<tr><th>PAR.</th><th>DESCRIPTION</th><th>M.U.</th><th>RANGE</th><th>AP1
AP3...AP8</th><th>LEV.</th><th>AP2</th><th>LEV.</th></tr>
<tr><td></td><td colspan="7">FANS (FAn)</td></tr>
<tr><td>FP1</td><td>Sets the probe used by the evaporator fans during normal operation:
diS (0) = disabled; Pb1 (1) = Pb1 probe;
Pb2(2) = Pb2 probe; Pb3 (3) = Pb3 probe;
Pb4(4) = Pb4 probe; Pb5 (5) = Pb5 probe;
Pbi (6) = virtual probe; LP (7) = remote probe;
PFi (8) = filtered virtual probe (see H74).</td><td>num</td><td>dis,
Pb1...Pb5,
Pbi, LP, PFi</td><td>Pb2</td><td>1&2</td><td>Pb2</td><td>1&2</td></tr>
<tr><td>FP2</td><td>Sets the probe used by the evaporator fans during defrost. Same as FP1.</td><td>num</td><td>dis,
Pb1...Pb5,
Pbi, LP, PFi</td><td>Pb2</td><td>2</td><td>Pb2</td><td>2</td></tr>
<tr><td>FPt</td><td>Parameter management mode FSt.
AbS (0) = absolute value; rEL (1) = relative value.</td><td>flag</td><td>AbS/rEL</td><td>AbS</td><td>2</td><td>AbS</td><td>2</td></tr>
<tr><td>FSt</td><td>Fans disabling temperature.
If the value read is greater than FSt, the fans will be stopped. The value is positive or negative (only if FP1 ≠ dis).</td><td>°C/°F</td><td>-58.0...302</td><td>5.0</td><td>1&2</td><td>5.0</td><td>1&2</td></tr>
<tr><td>FAd</td><td>Evaporator fans activation differential activation
(only if FP1 ≠ dis).</td><td>°C/°F</td><td>0.1...25.0</td><td>0.1</td><td>1&2</td><td>0.1</td><td>1&2</td></tr>
<tr><td>Fdt</td><td>Evaporator fan activation delay after a defrost cycle</td><td>min</td><td>0...250</td><td>0</td><td>2</td><td>0</td><td>2</td></tr>
<tr><td>dt</td><td>Drainage time. Dripping time.</td><td>min</td><td>0...250</td><td>0</td><td>1&2</td><td>0</td><td>1&2</td></tr>
<tr><td>dFd</td><td>Operating mode of evaporator fans during defrost.
OFF (0) = Fans Off; On (1) = Fans On.</td><td>flag</td><td>OFF/On</td><td>On</td><td>1&2</td><td>On</td><td>1&2</td></tr>
<tr><td>FCO</td><td>Evaporator fans operating mode with compressor output switched off (OFF). The status of the fans will be:
<table>
<tr><th></th><th>FP1</th><th>FCO</th><th>COMPRESSOR ON</th><th>COMPRESSOR OFF</th></tr>
<tr><td rowspan="15">DAY</td><td rowspan="5">FP1 present</td><td>0</td><td>Thermostat controlled</td><td>OFF</td></tr>
<tr><td>1</td><td>Thermostat controlled</td><td>Thermostat controlled</td></tr>
<tr><td>2</td><td>Thermostat controlled</td><td>Thermostat controlled</td></tr>
<tr><td>3</td><td>Thermostat controlled</td><td>Duty cycle Day</td></tr>
<tr><td>4</td><td>Thermostat controlled</td><td>Duty cycle Day</td></tr>
<tr><td rowspan="5">FP1 inoperable</td><td>0</td><td>Duty cycle Day</td><td>ON</td></tr>
<tr><td>1</td><td>ON</td><td>ON</td></tr>
<tr><td>2</td><td>Duty cycle Day</td><td>Duty cycle Day</td></tr>
<tr><td>3</td><td>Duty cycle Day</td><td>Duty cycle Day</td></tr>
<tr><td>4</td><td>Duty cycle Day</td><td>Duty cycle Day</td></tr>
<tr><td rowspan="5">FP1 absent</td><td>0</td><td>ON</td><td>OFF</td></tr>
<tr><td>1</td><td>ON</td><td>ON</td></tr>
<tr><td>2</td><td>Duty cycle Day</td><td>Duty cycle Day</td></tr>
<tr><td>3</td><td>ON</td><td>Duty cycle Day</td></tr>
<tr><td>4</td><td>ON</td><td>Duty cycle Day</td></tr>
<tr><td rowspan="15">NIGHT</td><td rowspan="5">FP1 present</td><td>0</td><td>Thermostat controlled</td><td>OFF</td></tr>
<tr><td>1</td><td>Thermostat controlled</td><td>Thermostat controlled</td></tr>
<tr><td>2</td><td>Thermostat controlled</td><td>Thermostat controlled</td></tr>
<tr><td>3</td><td>Thermostat controlled</td><td>Duty cycle Night</td></tr>
<tr><td>4</td><td>Thermostat controlled</td><td>Duty cycle Night</td></tr>
<tr><td rowspan="5">FP1 inoperable</td><td>0</td><td>Duty cycle Night</td><td>ON</td></tr>
<tr><td>1</td><td>ON</td><td>ON</td></tr>
<tr><td>2</td><td>Duty cycle Night</td><td>Duty cycle Night</td></tr>
<tr><td>3</td><td>Duty cycle Night</td><td>Duty cycle Night</td></tr>
<tr><td>4</td><td>Duty cycle Night</td><td>Duty cycle Night</td></tr>
<tr><td rowspan="5">FP1 absent</td><td>0</td><td>ON</td><td>OFF</td></tr>
<tr><td>1</td><td>ON</td><td>ON</td></tr>
<tr><td>2</td><td>Duty cycle Night</td><td>Duty cycle Night</td></tr>
<tr><td>3</td><td>ON</td><td>Duty cycle Night</td></tr>
<tr><td>4</td><td>ON</td><td>Duty cycle Night</td></tr>
</table>
Duty cycle Day: controlled by means of parameters FOn and FOF.
Duty cycle Night: controlled by means of parameters Fnn and FnF.</td><td>num</td><td>0...4</td><td>2</td><td>1&2</td><td>2</td><td>1&2</td></tr>
</table>

PAR.	DESCRIPTION	M.U.	RANGE	AP1 AP3...AP8	LEV.	AP2	LEV.
FdC	Evaporator fans switch-off delay after compressor deactivation.	min	0...250	0	2	0	1&2
FOn	Time fans remain ON during daytime duty cycle. Operation of fans in duty cycle mode; valid when Dutycycle mode is active (see **FCO**).	min	0...250	1	1&2	1	1&2
FOF	Time fans remain OFF during daytime duty cycle. Operation of fans in duty cycle mode; valid when Dutycycle mode is active (see **FCO**).	min	0...250	0	1&2	0	1&2
Fnn	Time fans remain ON during night-time duty cycle. Operation of fans in duty cycle mode; valid when Dutycycle mode is active (see **FCO**).	min	0...250	1	1&2	1	1&2
FnF	Time fans remain OFF during daytime duty cycle. Operation of fans in duty cycle mode; valid when Dutycycle mode is active (see **FCO**).	min	0...250	0	1&2	0	1&2
	ALARMS (AL)						
rA1	Sets probe 1 used for temperature alarms: **diS** (0) = disabled; **Pb1** (1) = Pb1 probe; **Pb2** (2) = Pb2 probe; **Pb3** (3) = Pb3 probe; **Pb4** (4) = Pb4 probe; **Pb5** (5) = Pb5 probe; **Pbi** (6) = virtual probe; **PFi** (7) = filtered virtual probe (see **H74**).	num	diS, Pb1...Pb5, Pbi, PFi	Pb1	1&2	Pb1	1&2
rA2	Sets probe 2 used for temperature alarms. Same as **rA1**.	num	diS, Pb1...Pb5, Pbi, PFi	diS	2	diS	2
Att	It define if parameters **HA1/2** and **LA1/2** will be used as the absolute temperature value or differential in relation to the setpoint. **AbS** (0) = absolute value; **rEL** (1) = relative value. **NOTE**: In case of relative values (par. **Att**=1), the **HA1/2** parameter should be set to positive values, while the **LA1/2** parameter should be set to negative values (-LAL).	flag	AbS/rEL	rEL	1&2	rEL	1&2
AFd	Alarms activation differential.	°C/°F	0.1...25.0	2.0	1&2	2.0	1&2
HA1	Maximum alarm probe 1 (only if **rA1** ≠ diS). Temperature value (based on **Att**) above which the probe will trigger activation of the alarm signal.	°C/°F	LA1...302	10.0	1&2	10.0	1&2
LA1	Minimum alarm probe 1 (only if **rA1** ≠ diS). Temperature value (based on **Att**) beneath which the probe will trigger activation of the alarm signal.	°C/°F	-58.0...HA1	-10.0	1&2	-10.0	1&2
HA2	Maximum alarm probe 2 (only if **rA2** ≠ diS). Temperature value (based on **Att**) above which the probe will trigger activation of the alarm signal.	°C/°F	LA2...302	0.0	2	0.0	2
LA2	Minimum alarm probe 2 (only if **rA2** ≠ diS). Temperature value (based on **Att**) beneath which the probe will trigger activation of the alarm signal.	°C/°F	-58.0...HA2	0.0	2	0.0	2
PAO	Alarm exclusion time after the device is switched on following a power outage. **This parameter refers to high/low temperature alarms only.**	hours	0...10	3	1&2	3	1&2
dAO	Temperature alarm exclusion time after defrost.	min	0...250	30	1&2	30	1&2
OAO	Alarm indication delay (high and low temperature) following deactivation of digital input (port closed).	hours	0...10	0	2	0	1&2
tdO	Door open alarm activation delay.	min	0...250	0	2	0	1&2
tA1	Temperature 1 alarm signalling delay (only if **rA1**≠diS). **This parameter refers to high/low temperature alarms LA1 and HA1 only**.	min	0...250	30	1&2	30	1&2
tA2	Temperature 2 alarm signalling delay (only if **rA2**≠diS). **This parameter refers to high/low temperature alarms LA2 and HA2** only.	min	0...250	0	2	0	2
dAt	Alarm indicating end of defrost as a result of timeout. **no** (0) = the alarm is not triggered; **yES** (1) = triggers the alarm	flag	no/yES	no	1&2	no	1&2

PAR.	DESCRIPTION	M.U.	RANGE	AP1 AP3...AP8	LEV.	AP2	LEV.
EAL	Regulators inhibited by external alarm. **0**= does not inhibit any resource. **1** = compressor and defrost blocked. **2** = compressor, defrost and fans blocked.	num	0/1/2	0	2	0	2
tP	Alarm acknowledged by pressing any key. **no** (0) = no; **yES** (1) = yes.	flag	no/yES	yES	2	yES	2
Art	Link² supervision alarm activation period. Sets every how many minutes the system verifies the network operation. The alarm (**AtS**) is not shown on the display and: • if **Art** = 0 is disabled; • if **Art** = 1 is reset automatically after 5 minutes; • if **Art** ≥ 2 it is reset automatically after 10 minutes.	min*10	0...250	0	2	0	2
	LIGHTS & DIGITAL INPUTS (Lit)						
dSd	Light relay / door switch interlock. **no** (0) = door opening does not switch on the light; **yES** (1) = door opening switches on the light (if it was off).	flag	no/yES	no	2	yES	1&2
dLt	Delay preceding deactivation (switch-off) of light relay (interior light). The cell light remains on for **dLt** minutes after the door is closed (only if **dSd** = yES).	min	0...250	0	2	0	1&2
OFL	Sets whether the light key disabled the light relay. Enables switching off with cold room light switch even if the delay **dLt** is enabled. **no** (0) = no; **yES** (1) = yes.	flag	no/yES	no	2	no	1&2
dOd	Sets which utilities switch off when the door switch is activated. **0** = disabled; **1** = disable fans; **2** = disable compressor; **3** = disable fans and compressor.	num	0...3	0	2	0	1&2
dOA	Action forced from digital input (if **PEA** ≠ 0): **0** = activate compressor; **1** = activate fans; **2** = activate compressor and fans; **3** = deactivate compressor; **4** = deactivate fans; **5** = deactivate compressor and fans.	num	0...5	0	2	0	1&2
PEA	Selection of digital input configured to inhibit/enable resources. **0** = function disabled; **1** = associated with door switch; **2** = associated with external alarm; **3** = associated with external alarm and door switch.	num	0...3	0	2	0	1&2
dCO	Compressor activation/deactivation delay when enabled (DI activation).	min	0...250	0	2	0	1&2
dFO	Fan activation/deactivation delay when enabled (DI activation).	min	0...250	0	2	0	1&2
ASb	Sets whether the light key and the light enabling function with door open can be activated even with the controller in OFF. **no** (0) = disables relay until controller comes out of stand-by; **yES** (1) = status of relay remains unchanged and relay can be activated/deactivated using key.	flag	no/yES	no	2	no	1&2
	LINK² (Lin)						
L00	Sets which probe to share via Link²: **diS** (0) = disabled; **Pb1** (1) = probe Pb1; **Pb2**(2) = probe Pb2; **Pb3** (3) = probe Pb3; **Pb4**(4) = probe Pb4; **Pb5** (5) = probe Pb5; **Pbi** (6) = virtual probe; **PFi** (7) = filtered virtual probe (**H74**).	num	diS, Pb1....Pb5, Pbi, PFi	0	1&2	0	2
L01	Shares the displayed value with the Link² network. **0** = value displayed by the device cannot be sent to the Link² network; **1** = value displayed by the device can be sent to the Link² network; **2** = displays the value of the device that set **L01** = 1.	num	0/1/2	0	1&2	0	2

PAR.	DESCRIPTION	M.U.	RANGE	AP1 AP3...AP8	LEV.	AP2	LEV.
L02	Sends the Setpoint value to the Link² network after it has been changed. **no** (0) = no; **yES** (1) = yes.	flag	no/yES	no	1&2	no	2
L03	Call for defrost can be sent to the Link² network. **0** = defrost request sending disabled; **1** = master device for sending simultaneous defrost request; **2** = master device for sending sequential defrost request.	num	0/1/2	0	1&2	0	2
L04	End defrost mode. **ind** (0) = independent; **dEP**(1) = dependent. Wait for all controllers to finish defrosting.	flag	ind/dEP	ind	1&2	ind	2
L05	Enables synchronization of Stand-by command. **no** (0) = no; **yES** (1) = yes.	flag	no/yES	no	1&2	no	2
L06	Enables synchronization of lights command. **no** (0) = no; **yES** (1) = yes.	flag	no/yES	no	1&2	no	2
L07	Enables synchronization of Energy Saving command. **no** (0) = no; **yES** (1) = yes.	flag	no/yES	no	1&2	no	2
L08	Enables synchronization of AUX command. **no** (0) = no; **yES** (1) = yes.	flag	no/yES	no	1&2	no	2
L09	Enables sharing of saturation (pressure) probe. **no** (0) = no; **yES** (1) = yes.	flag	no/yES	no	1&2	no	2
L10	Sets the timeout for the end of dependent defrosts.	min	0...250	30	1&2	30	2
L11	Sets the number of devices connected in Link² for alarms. If the read device number is different from the set number, a Link² (**ELi**) alarm will be triggered, with automatic reset once the device number matches that set in the parameter.	num	0...8	0	1&2	0	2
L12	Sets how to share the alarms. **0** = function disabled; **1** = alarm relay master; **2** = alarm relay slave.	num	0/1/2	0	1&2	0	2
	DEEP COOLING CYCLE (dEC)						
dCS	Deep cooling setpoint.	°C/°F	-58.0...302	0.0	2	0.0	2
tdc	Deep cooling duration.	min	0...250	0	2	0	2
dcc	Defrost delay after deep cooling.	min	0...250	0	2	0	2
	ENERGY SAVING (EnS)						
ESt	Type of event activated by RTC: **0**= disabled **1**= Energy Saving; **2**= Energy Saving + Light off; **3**= Energy Saving + Light off + AUX output active; **4**= Device switched off.	num	0...4	0	1&2	0	2
ESF	Activation of fans in night mode (energy saving). **no** (0) = disabled; **yES** (1) = enabled if energy saving mode is active (only if **ESt** ≠ 0 and **ESt** ≠ 4).	flag	no/yES	0	1&2	0	1&2
Cdt	Door close time for dynamic setpoint activation.	min*10	0...255	0	2	0	1&2
ESo	Cumulative door open time for dynamic setpoint deactivation.	num	0...10	0	2	0	1&2
OS1	Setpoint 1 offset (**SP1**) in energy saving mode.	°C/°F	-50.0...50.0	3	1&2	3	1&2
OS2	Setpoint 2 offset (**SP2**) in energy saving mode (only if **rE** ≠ 0)	°C/°F	-50.0...50.0	0	2	0	2
Od1	Energy Saving Offset 1 glass door display cabinets.	°C/°F	-50.0...50.0	0	2	0	1&2
Od2	Energy saving offset 2 for glass door display cabinets (only if **rE** ≠ 0).	°C/°F	-50.0...50.0	0	2	0	2
dn1	Setpoint 1 differential (SP1) in energy saving mode.	°C/°F	-58.0...302	4	1&2	4	1&2
dn2	Setpoint 2 differential (SP2) in energy saving mode (only if **rE** ≠ 0).	°C/°F	-58.0...302	4.0	2	4.0	2
EdH	Start time hours weekday Energy Saving. **0...23** = start hour; **24** = disabled.	hours	0...24	24	1&2	24	2

PAR.	DESCRIPTION	M.U.	RANGE	AP1 AP3...AP8	LEV.	AP2	LEV.
Edn	Start time minutes weekday Energy Saving.	min	0...59	0	1&2	0	2
Edd	Duration of weekday Energy Saving.	hours	1...72	10	1&2	10	2
EFH	Start time hours weekend/public holiday Energy Saving. **0...23** = start hour; **24** = disabled.	hours	0...24	24	1&2	24	2
EFn	Start time minutes weekend/public holiday Energy Saving.	min	0...59	0	1&2	0	2
EFd	Duration of weekend/public holiday Energy Saving.	hours	1...72	24	1&2	24	2
	FRAME HEATERS (FrH)						
FH	Sets which probe uses the Frame Heaters (FH): **diS** (0) = disabled; **dc** (1) = Duty Cycle; **Pb1** (2) = probe Pb1; **Pb2** (3) = probe Pb2; **Pb3** (4) = probe Pb3; **Pb4** (5) = probe Pb4; **Pb5** (6) = probe Pb5; **Pbi** (7) = virtual probe; **PFi** (8) = filtered virtual probe (see **H74**).	num	diS, dc, Pb1...Pb5, Pbi, PFi	diS	1&2	diS	2
FHt	Duration of operating period of Frame Heaters (FH), only used when OC output is used with SSR relay.	s*10	1...250	30	1&2	30	2
FH0	Setpoint setting of the Frame Heaters. (only if **FH** ≠ dis and **FH** ≠ dc).	°C/°F	-58.0...302	0.0	1&2	0.0	2
FH1	Offset setting of the Frame Heaters. (only if **FH** ≠ dis and **FH** ≠ dc).	°C/°F	0.0...25.0	0.0	1&2	0.0	2
FH2	Band setting of the Frame Heaters. (only if **FH** ≠ dis and **FH** ≠ dc).	°C/°F	-58.0...302	0.0	1&2	0.0	2
FH3	Minimum percentage setting of the Frame Heaters (only if **FH** ≠ dis and **FH** ≠ dc).	%	0...100	0	1&2	0	2
FH4	Sets maximum percentage for day Duty Cycle.	%	0...100	75	1&2	75	2
FH5	Sets maximum percentage for night-time Duty Cycle.	%	0...100	50	1&2	50	2
FH6	Setting of percentage during defrost.	%	0...100	100	1&2	100	2
	COMMUNICATION (Add)						
Adr	Modbus protocol controller address.	num	1 ... 250	1 (**DEFAULT**)			1&2
bAU	Select baudrate. **96** (0) = 9600; **192** (1) = 19200; **384** (2) = 38400.	num	96/19200/38400	96 (**DEFAULT**)			1&2
Pty	Set the ModBUS parity bit. **n** (0) = none; **E** (1) = even; **or** (2) = odd.	num	n/E/o	E (**DEFAULT**)			1&2
	DISPLAY (diS)						
LOC	LOCk. Setpoint edit lock. The parameter programming menu can still be accessed, and the settings changed, which means also that the status of this parameter can be changed so as to unlock the keypad. **no** (0) = no; **yES** (1) = yes.	flag	no/yES	no	1&2	no	1&2
PS1	PAssword 1. When enabled (**PS1** ≠ 0) this password provides access to level 1 parameters (**User**).	num	0...250	0	2	0	2
PS2	PAssword 2. When enabled (**PS2** ≠ 0) this password provides access to level 2 parameters (**Installer**).	num	0...250	15	2	15	2
ndt	Display values with decimal point. **no** = no (integers only); **yES** = yes (display with decimal point).	flag	no/yES	yES	1&2	yES	1&2
CA1	Probe **Pb1** calibration (only if **H41** ≠ Pro). Positive or negative temperature value added to the value read by **Pb1**. This sum is used for both temperature display and temperature regulation purposes.	°C/°F	-30.0...30.0	0.0	1&2	0.0	1&2
CA2	Probe **Pb2** calibration (only if **H42** = Pro). Positive or negative temperature value added to the value read by **Pb2**. This sum is used for both temperature display and temperature regulation purposes.	°C/°F	-30.0...30.0	0.0	1&2	0.0	1&2
CA3	Probe **Pb3** calibration (only if **H43** = Pro). Positive or negative temperature value added to the value read by **Pb3**. This sum is used for both temperature display and temperature regulation purposes.	°C/°F	-30.0...30.0	0.0	1&2	0.0	1&2
CA4	Probe **Pb4** calibration (only if **H44** = Pro). Positive or negative temperature value added to the value read by **Pb4**. This sum is used for both temperature display and temperature regulation purposes.	°C/°F	-30.0...30.0	0.0	1&2	0.0	1&2

PAR.	DESCRIPTION	M.U.	RANGE	AP1 AP3...AP8	LEV.	AP2	LEV.
CA5	Probe **Pb5** calibration (only if **H45** = Pro). Positive or negative temperature value added to the value read by **Pb5**. This sum is used for both temperature display and temperature regulation purposes.	°C/°F	-30.0...30.0	0.0	1&2	0.0	1&2
CA6	Calibration of pressure transducer **Pb6** (4...20 mA) (only if **H46**=Pro). Positive or negative temperature value added to the value read by the pressure transducer (4...20 mA). This sum is used for both temperature display and temperature regulation purposes.	Bar	-30.0...30.0	0.0	1&2	0.0	1&2
CA7	Calibration of ratiometric transducer **Pb7** (only if **H47** = Pro). Positive or negative temperature value added to the value read by the ratiometric transducer. This sum is used for both temperature display and temperature regulation purposes.	Bar	-30.0...30.0	0.0	1&2	0.0	1&2
LdL	Minimum value that can be displayed by the device.	°C/°F	-58.0...HdL	-40.0	1&2	-40.0	1&2
HdL	Maximum value that can be displayed by the device.	°C/°F	LdL...302	-100.0	1&2	-100.0	1&2
ddL	Display mode during defrost. **0** = displays the temperature read by probe or the setpoint (see **ddd**); **1** = locks the reading at the temperature value read by probe when defrosting starts and until the next time the SEt is reached (or until **Ldd** has elapsed); **2** = displays the label dEF during defrosting and until the next time the SEt is reached (or until **Ldd** has elapsed).	num	0/1/2	0	1&2	0	1&2
Ldd	Timeout value for display unlock.	min	0...250	0	1&2	0	1&2
dro	Selection of °C or °F to display the probe value. **C** (0)= °C; **F** (1)= °F. **NOTE**: switching between °C and °F or vice versa DOES NOT modify the setpoint, differential values, etc. (example: SEt = 10 °C becomes 10 °F).	flag	C/F	C	2	C	2
SbP	Selects BAR or PSI to display the value of the pressure sensor 4...20 mA (Pb6) and Ratiometric sensors (Pb7) if present. **bAr** (0) = BAR; **PSi** (1) = PSI.	flag	bAr/PSi	bAr	2	bAr	2
rEP	Selects absolute/relative pressure. **0** = relative; **1** = absolute.	num	0/1	0 (**DEFAULT**)			2
ddd	Sets the value to be shown on the display. **SP1** (0) = setpoint SP1; **Pb1** (1) = probe Pb1; **Pb2** (2) = probe Pb2; **Pb3** (3) = probe Pb3; **Pb4** (4) = probe Pb4; **Pb5** (5) = probe Pb5; **Pbi** (6) = virtual probe; **LP** (7) = remote probe; **PFi** (8) = filtered virtual probe (**H74**).	num	SP1, Pb1...Pb5, Pbi, LP, PFi	Pb1	1&2	Pb1	1&2
ddE	Sets the value to be shown on the ECHO module display. Analogue at **ddd**.	num	SP1, Pb1...Pb5, Pbi, LP, PFi	Pb1	2	Pb1	2
	HACCP (HCP)						
rPH	Sets which probe will be used by the HACCP alarms. **diS** (0) = disabled; **Pb1** (1) = probe Pb1; **Pb2** (2) = probe Pb2; **Pb3** (3) = probe Pb3; **Pb4** (4) = probe Pb4; **Pb5** (5) = probe Pb5.	num	diS, Pb1...Pb5	diS	1&2	diS	1&2
	CONFIGURATION (CnF) ➔ Switched off and on again if one or more of the parameters are changed.						
trA	Selects the model of ratiometric transducer used: **USE** (0) = Generic Probe Settable by the customer; **rA1** (1) = EWPA 010 R 0/5 V 0/10 BAR FEMALE; **rA2** (2) = EWPA 030 R 0/5 V 0/30 BAR FEMALE; **rA3** (3) = EWPA 050 R 0/5 V 0/50 BAR FEMALE; **rA4** (4) = AKS 32R -1 ...6 BAR; **rA5** (5) = AKS 32R -1 ...12 BAR; **rA6** (6) = AKS 32R -1 ... 20 BAR; **rA7** (7) = AKS 32R -1 ... 34 BAR; **rA8** (8) = Reserved. **NOTE**: The upper and lower limits of probes **rA1**...**rA8** are preset (and cannot be modified) while if **USE** is selected, set the values using parameters **H05** and **H06**.	num	USE, rA1...rA8	USE (**DEFAULT**)			1&2

PAR.	DESCRIPTION	M.U.	RANGE	AP1 AP3...AP8	LEV.	AP2	LEV.
H00	Selection of type of probe used (Pb1...Pb5). **ntc** (0) = NTC; **Ptc** (1) = PTC; **Pt1** (2) = Pt1000	num	ntc/Ptc/Pt1	ntc	1&2	ntc	1&2
H02	Key activation time, when configured with a second function. When the ESC, UP e DOWN keys have been configured with a second function (defrost, aux, etc.), a time is set for quick activation of the second function. With the exception of the AUX and LIGHT functions which have a fixed delay of 0.5 seconds.	num	0...250	5	2	5	2
H03	Pressure transducer lower limit 4-20 mA (relative pressure).	Bar	-1.0...H04	-1 (**DEFAULT**)			2
H04	Pressure transducer upper limit 4-20 mA (relative pressure).	Bar	H03...150.0	7 (**DEFAULT**)			2
H05	Ratiometric transducer lower limit (relative pressure).	Bar	-1.0...H06	-1 (**DEFAULT**)			2
H06	Ratiometric transducer upper limit (relative pressure).	Bar	H05...150.0	7 (**DEFAULT**)			2
H08	Stand-by operating mode. **0** = display off: the regulators are active and the device reactivates the display to signal any alarms; **1** = display off; regulators and alarms inhibited; **2** = display shows OFF label; regulators and alarms inhibited.	num	0/1/2	2	1&2	2	1&2
H11	Configuration of digital input 1/polarity (Pb1) (only if **H41** = di). **0** = disabled; **± 1** = start defrost; **± 2** = end defrost; **± 3** = Light; **± 4** = energy saving; **± 5** = AUX; **± 6** = external alarm; **± 7** = Stand-by; **± 8** = door switch; **± 9** = preheat alarm; **±10**, **±11**, **±12** = reserved; **±13** = deep cooling; **±14** = EEV forced OFF; **±15** = forces Fans in ON; **±16** = force **OF1** (remote offset); **±17** = generic input. **NOTE**: - The + sign indicates that the input is active when the contact is closed; - The − sign indicates that the input is active when the contact is opened.	num	-17...17	0	2	0	2
H12	Configuration of digital input 2/polarity (Pb2). (only if **H42** = di). Same as **H11**.	num	-17...17	0	2	0	2
H13	Configuration of digital input 3/polarity (Pb3). (only if **H43** = di). Same as **H11**.	num	-17...17	0	2	0	2
H14	Configuration of digital input 4/polarity (Pb4). (only if **H44** = di). Same as **H11**.	num	-17...17	0	2	0	2
H15	Configuration of digital input 5/polarity (Pb5). (only if **H45** = di). Same as **H11**.	num	-17...17	0	2	0	2
H16	Configuration of digital input 6/polarity (Pb6). (only if **H46** = di). Same as **H11**.	num	-17...17	0	1&2	0	1&2
H17	Configuration of digital input 7/polarity (Pb7). (only if **H47** = di). Same as **H11**.	num	-17...17	0	2	0	2
H18	Configuration of digital input 8/polarity (DI). Same as **H11**.	num	-17...17	0	1&2	-8	1&2
dti	Unit of measurement for delay in digital inputs DI1 (Pb1) and DI2 (Pb2). If Pb1 or Pb2 are configured as DI it is possible to set the unit of measurement used. **0** = minutes; **1** = seconds.	num	0/1	0	2	0	2
d11	Delay to activate digital input 1 (Pb1) (only if **H41** = di).	see **dti**	0...255	0	2	0	2
d12	Delay to activate digital input 2 (Pb2) (only if **H42** = di).	see **dti**	0...255	0	2	0	2
d13	Delay to activate digital input 3 (Pb3) (only if **H43** = di).	min	0...255	0	2	0	2
d14	Delay to activate digital input 4 (Pb4) (only if **H44** = di).	min	0...255	0	2	0	2
d15	Delay to activate digital input 5 (Pb5) (only if **H45** = di).	min	0...255	0	2	0	2
d16	Delay to activate digital input 6 (Pb6) (only if **H46** = di).	min	0...255	0	1&2	0	1&2
d17	Delay to activate digital input 7 (Pb7) (only if **H47** = di).	min	0...255	0	2	0	2
d18	Delay preceding activation of digital input 8 (DI).	min	0...255	0	1&2	0	1&2

PAR.	DESCRIPTION	M.U.	RANGE	AP1 AP3...AP8	LEV.	AP2	LEV.
H21	Configuration of digital output 1 (OUT 1). **0** = disabled; **1** = compressor 1; **2** = defrost 1 / hot gas valve; **3** = evaporator fans; **4** = alarm; **5** = AUX; **6** = Stand-by; **7** = Light; **8** = anti-condensation heaters (Frame heater); **9** = defrost 2; **10** = reserved; **11** = condenser fans; **12** = AUX regulator; **13** = hot gas on evaporator suction valve; **14** = alarm with inverted polarity.	num	0...14	1	2	1	2
H22	Configuration of digital output 2 (OUT 2). Same as **H21**. **default RTX 600 /V**	num	0...14	3	2	3	2
	default RTD 600 /V			7	2	7	2
H23	Configuration of digital output 3 (OUT 3). Same as **H21**.	num	0...14	2	2	2	2
H24	Configuration of digital output 4 (OUT 4). Same as **H21**. **default RTX 600 /V**	num	0...14	7	1&2	7	1&2
	default RTD 600 /V			3	1&2	3	1&2
H25	Configuration of digital output 5 (OUT 5). Same as **H21**.	num	0...14	4	2	4	2
H27	Configuration of digital output 7 (Open collector). Same as **H21**.	num	0...14	8	1&2	8	2
H29	Enable keypad buzzer. **diS** (0) = output disabled; **En** (1) = output enabled.	flag	diS/En	diS	2	diS	2
H31	**UP** key configuration. **0** = Disabled; **1** = Defrost; **2** = Reduced set; **3** = Light; **4** = Energy saving; **5** = AUX; **6** = Stand-by; **7** = Deep cooling; **8** = Start/stop defrost; **9** = cabinet cleaning function (cleaning).	num	0...9	1	2	1	2
H32	Configuration of **DOWN** key. Same as **H31**.	num	0...9	0	2	0	2
H33	Configuration of **ESC** key. Same as **H31**.	num	0...9	6	1&2	6	1&2
H34	Configuration of **Free 1**. Same as **H31**.	num	0...9	3	2	3	2
H35	Configuration of **Free 2**. Same as **H31**.	num	0...9	6	2	6	2
H36	Configuration of **Free 3**. Same as **H31**.	num	0...9	0	2	0	2
H37	Configuration of **Free 4**. Same as **H31**.	num	0...9	0	2	0	2
H41	Configuration of analogue input type 1 (Pb1). **diS** (0) = disabled; **di** (1) = digital input; **Pro** (2) = probe input.	num	diS/di/Pro	Pro	2	Pro	2
H42	Configuration of analogue input type 2 (Pb2). Same as **H41**.	num	diS/di/Pro	Pro	2	Pro	2
H43	Configuration of analogue input type 3 (Pb3). Same as **H41**.	num	diS/di/Pro	diS	2	diS	2
H44	Configuration of analogue input type 4 (Pb4). Same as **H41**.	num	diS/di/Pro	diS	2	diS	2
H45	Configuration of analogue input type 5 (Pb5). Same as **H41**.	num	diS/di/Pro	Pro	2	Pro	2
H46	Configuration of analogue input type 6 (Pb6 = 4...20 mA). Same as **H41**.	num	diS/di/Pro	Pro	2	Pro	2
H47	Configuration of analogue input type 7 (Pb7 = Ratiometric). Same as **H41**.	num	diS/di/Pro	diS	2	diS	2
H50	Configuration of analogue output type. **010** (0) = output 0...10 V; **420** (1) = output 4...20 mA.	flag	010/420	010	2	010	2
H51	Function linked to analogue output. **diS** (0) = disabled; **FH** (1) = Frame Heater; **PEr** (2) = Valve output opening percentage.	num	diS, FH, PEr	diS	2	diS	2

PAR.	DESCRIPTION	M.U.	RANGE	AP1 AP3...AP8	LEV.	AP2	LEV.
H60	Display of selected application. **0** = disabled; **1** = Vector 1 (AP1); **2** = Vector 2 (AP2); **3** = Vector 3 (AP3); **4** = Vector 4 (AP4); **5** = Vector 5 (AP5); **6** = Vector 6 (AP6); **7** = Vector 7 (AP7); **8** = Vector 8 (AP8).	num	0...8	1 (**DEFAULT**)			1&2
H68	Clock presence. **no** (0) = no clock; **yES** (1) = clock present.	flag	no/yES	yES	2	no	2
H70	Sets probe 1 to use as virtual probe. **diS** (0) = disabled; **Pb1** (1) = probe Pb1; **Pb2** (2) = probe Pb2; **Pb3** (3) = probe Pb3; **Pb4** (4) = probe Pb4; **Pb5** (5) = probe Pb5.	num	diS, Pb1...Pb5	0	2	0	2
H71	Sets probe 2 to use as virtual probe. Same as **H70**.	num	diS, Pb1...Pb5	0	2	0	2
H72	% calculation used by virtual probe - daytime.	%	0...100	50	2	50	2
H73	% calculation used by virtual probe - night-time (Energy Saving mode).	%	0...100	50	2	50	2
H74	Sets the probe to use as a filtered virtual probe (PFi). **diS** (0) = disabled; **Pb1** (1) = probe Pb1; **Pb2** (2) = probe Pb2; **Pb3** (3) = probe Pb3; **Pb4** (4) = probe Pb4; **Pb5** (5) = probe Pb5; **Pbi** (6) = virtual probe.	num	diS, Pb1...Pb5, Pbi	0	2	0	2
H75	Alpha filter constant to use for calculating the value displayed by the filtered virtual probe (value in thousandths).	num	1...1000	1	2	1	2
H76	Offset value to use for calculating the value displayed by the filtered virtual probe.	num	-999.9...999.9	0.0	2	0.0	2
	ELECTRONIC EXPANSION VALVE (EE0)						
Ety	Selection of the driver type for the electronic valve: **0** = disabled; **1** = pulse driver.	num	0/1	1	2	1	2
rSP	Sets the saturation probe to use: **diS** (0) = disabled; **Pb6** (1) = pressure transducer 4...20 mA; **Pb7** (2) = ratiometric transducers; **LSP** (3) = remote probe (shared internally of Link^2 network); **rP** (4) = remote probe (from supervisor).	num	diS, Pb6, Pb7 LSP, rP	Pb6 (**DEFAULT**)			1&2
rSS	Sets the overheating probe to use: **diS** (0)= disabled; **Pb1** (1) = Pb1 probe; **Pb2** (2) = Pb2 probe; **Pb3** (3) = Pb3 probe; **Pb4** (4) = Pb4 probe; **Pb5** (5) = Pb5 probe.	num	diS, Pb1...Pb5	Pb5 (**DEFAULT**)			1&2
rbu	Sets the type of saturation probe used as backup. **diS** (0) = disabled; **LSP** (1) = backup saturation probe; **rP** (2) = remote probe (from supervisor).	num	diS, LSP, rP	diS (**DEFAULT**)			2
EPd	Saturation value display mode: **t** (0) = temperature; **P** (1) = pressure.	flag	t/P	t (**DEFAULT**)			1&2
Ert	Selects the type of refrigerant used: **404** (0) = R404A; **r22** (1) = R22; **410** (2) = R410A; **134** (3) = R134a; **744** (4) = R744 (CO2); **507** (5) = R507A; **717** (6) = R717 (NH3); **290** (7) = reserved; **PAr** (8) = refrigerant parameterizable; **407** (9) = R407A; **448** (10) = R448A; **449** (11) = R449A; **450** (12) = R450; **513** (13) = R513A. **NOTE**: For custom settings relative to the type of refrigerant in use, contact Eliwell.	num	404, r22, 410 134, 744, 507 717, 290, PAr 407, 448, 449 450, 513	410 (**DEFAULT**)			1&2
U01	PWM period.	s	3 ... 10	6 (**DEFAULT**)			2
U02	Maximum valve opening percentage.	%	0 ... 100	100 (**DEFAULT**)			2

PAR.	DESCRIPTION	M.U.	RANGE	AP1 AP3...AP8	LEV.	AP2	LEV.
U05	Operating time at max opening before an alarm signal.	min	0...255	60 (**DEFAULT**)			2
U06	Minimum useful valve opening percentage.	%	0...100	10 (**DEFAULT**)			1&2
U07	Maximum valve useful opening percentage.	%	0...100	100 (**DEFAULT**)			2
U08	Sets the fixed opening percentage of the valve if the pressure transducer is not working (**U22** = diS).	%	0...100	0 (**DEFAULT**)			2
U13	Indicates the frequency at which the chiller cabinet thermodynamic cycle values are updated: • by decreasing **U13**, the values are updated more frequently; • by increasing **U13**, the values are updated less frequently.	s	0...3600	5.0 (**DEFAULT**)			2
U14	Sets the type of chiller cabinet thermodynamic cycle overheating control type: • by decreasing **U14**, the chiller cabinet overheating temperature tends to approach the value set in parameter **OLt** (Minimum overheating threshold), and becomes more reactive. • by increasing **U14**, the chiller cabinet overheating temperature tends to guarantee greater control stability rather than approach the value set in parameter **OLt** (Minimum overheating threshold). **OPERATING PROCEDURE** To optimise the cabinet performance: • if the overheating temperature > **OLt**, decrease **U14**; • if the overheating temperature < **OLt**, increase **U14**.	°C/°F	0.0...999.9	5.0 (**DEFAULT**)			2
U22	Sets the type of controller behaviour if the pressure transducer is not working. **diS**(0) = uses a fixed opening percentage set via parameter **U08**. **En** (0) = uses as a saturation temperature backup value the value set via parameter **U23**.	flag	diS/En	diS (**DEFAULT**)			2
U23	Sets the saturation temperature backup value if the pressure transducer is not working.	°C/°F	-999.9...999.9	0.0 (**DEFAULT**)			2
U25	Sets the loads to be disabled in the event of a compressor error: **0** = Disabled; **1** = Defrost; **2** = Lights; **3** = Defrost and Lights; **4** = Frame Heaters; **5** = Defrost and Frame Heaters; **6** = Lights and Frame Heaters; **7** = Defrost, lights and Frame Heaters; **8** = Evaporator Fans; **9** = Defrost and Fans; **10** = Lights and Fans; **11** = Defrost, lights and Fans; **12** = Frame Heaters and Fans; **13** = Defrost, Frame Heaters and Fans; **14** = Luci, Frame Heaters and Fans; **15** = Defrost, luci, Frame Heaters and Fans.	num	0...15	0 (**DEFAULT**)			2
U26	Sets the saturation temperature threshold for detection of a compressor error beyond which the loads are disabled.	°C/°F	-999.9...999.9	0.0 (**DEFAULT**)			2
OLt	Minimum overheating threshold.	°C/°F	2.0...999.9	5.0 (**DEFAULT**)			1&2
A_F	Select PID automatic or manual mode.	num	0/1	0 (**DEFAULT**)			2
dUt	Duty cycle PID in manual mode.	%	0.0...100	0 (**DEFAULT**)			2
HOE	Enable MOP. **0** = disabled; **1** = enabled.	num	0/1	0 (**DEFAULT**)			2
tAP	Min time that temp upper threshold is exceeded for alarm activation.	min	0...255	180 (**DEFAULT**)			2
Hot	Evaporator temperature upper threshold.	°C/°F	-60.0...100	0.0 (**DEFAULT**)			2
HdP	MOP disable time at start-up.	min	0...999	0 (**DEFAULT**)			2

PAR.	DESCRIPTION	M.U.	RANGE	AP1 AP3...AP8	LEV.	AP2	LEV.
	COPY CARD (FPr).						
UL	Upload. To transfer programming parameters from device to UNICARD/MFK.	-	-	- (**DEFAULT**)			2
dL	Download. To transfer programming parameters from UNICARD/MFK to device.	-	-	- (**DEFAULT**)			2
Fr	Formatting. To erase data on UNICARD/MFK. **NOTE**: If parameter “Fr” is used, the data entered will be permanently lost. This operation cannot be reversed.	-	-	- (**DEFAULT**)			2
	FUNCTIONS (FnC)						

The following functions are available:

Function	Function label ACTIVE	Function label NOT ACTIVE	Signalling
Manual defrost	dEF+blinking icon	dEF	Blinking Defrost icon
AUX (ON=active; OFF=not active)	Aon	AoF	AUX ON icon
Stand-by	OFF	OFF	LED Stand-by ON (only **KDWPlus**)

NOTE: • To edit the state of a given function press the “set” key
• If the device is switched off the function labels will return to the default state (inactive).

CHAPTER 10
ALARM DIAGNOSTICS

10.1. ALARMS AND SIGNALS TABLE

When an alarm condition is detected, the alarm icon " (•) " will come on.
If present and enabled, the buzzer and alarm relay will also activate.

NOTE: To silence the buzzer, press and release any key, the relative icon will continue to flash.

All alarms are reset automatically (i.e. they disappear when the issue that caused them is removed).

The alarm codes are as follows:

Code	Description	LED (•)	Relay alarm	Reset	Parameters involved in ENABLING ALARM
E1	probe Pb1 not working	ON	active	Automatic	Ont, OFt
E2	probe Pb2 not working	ON	active	Automatic	Ont, OFt
E3	probe Pb3 not working	ON	active	Automatic	Ont, OFt
E4	probe Pb4 not working	ON	active	Automatic	Ont, OFt
E5	probe Pb5 not working	ON	active	Automatic	Ont, OFt
E6	probe Pb6 not working (pressure transducer 4...20 mA)	ON	active	Automatic	Ont, OFt
E7	probe Pb7 not working (ratiometric transducer)	ON	active	Automatic	Ont, OFt
EL	probe Link^2 not working	ON	active	Automatic	Ont, OFt
Ei	Virtual probe not working	ON	active	Automatic	Ont, OFt
AH1	HIGH temperature alarm 1	ON	active	Automatic	SP1, Att, AFd, HA1, LA1, PAO, dAO, OAO, tA1
AL1	LOW temperature alarm 1	ON	active	Automatic	SP1, Att, AFd, HA1, LA1, PAO, dAO, OAO, tA1
AH2	HIGH temperature alarm 2	ON	active	Automatic	SP2, Att, AFd, HA2, LA2, PAO, dAO, OAO, tA2
AL2	LOW temperature alarm 2	ON	active	Automatic	SP2, Att, AFd, HA2, LA2, PAO, dAO, OAO, tA2
EA	External alarm	ON	active	Automatic	PEA, EAL
OPd	Door open alarm	ON	not active	Automatic	PEA, tdO
Ad2	Defrost end due to timeout	ON	not active	Automatic	dE1, dE2, dAt
Prr	Preheat alarm	ON	not active	Automatic	-
E10	Clock alarm	ON	not active	Automatic	-
EEP	valve MOP alarm	ON	not active	Automatic	-
EEt	valve output max alarm	ON	not active	Automatic	-
EES	saturation probe inoperable	ON	not active	Automatic	-

NOTE:

- If alarm exclusion times have been set (see "AL" folder in parameters table) the alarm will not be indicated.
- With the exception of inoperable probe alarms, all other alarms will record the corresponding label in the folder **ALr** in the "**MACHINE STATUS**" menu (refer to **"6.7.7. Machine status menu" on page 58**).
- The probe not working alarms will be shown on the display via label E1, E2, E3, E4, E5, E6, E7, EL and Ei according to whether it is probe Pb1, Pb2, Pb3, Pb4, Pb5, Pb6, Pb7, Link^2 or Virtual.

10.1.1. Cause/Effect table

RTX-RTD 600 /V devices are able to perform complete diagnostics of the system and report any operating trouble with specific alarms, display and record particular events, defined by the user, to achieve greater control over the system.

Label	Description	Cause	Effects	Troubleshooting
E1	Probe Pb1 in error	• Measured values are outside operating range • Probe inoperable/short-circuited/open	• Label **E1** displayed • Alarm icon permanently on	• Verify probe type (**H00**) • Verify the probe wiring • Replace probe
E2	Probe Pb2 in error	• Measured values are outside operating range • Probe inoperable/short-circuited/open	• Label **E2** displayed • Alarm icon permanently on	• Verify probe type (**H00**) • Verify the probe wiring • Replace probe
E3	Probe Pb3 in error	• Measured values are outside operating range • Probe inoperable/short-circuited/open	• Label **E3** displayed • Alarm icon permanently on	• Verify probe type (**H00**) • Verify the probe wiring • Replace probe
E4	Probe Pb4 in error	• Measured values are outside operating range • Probe inoperable/short-circuited/open	• Label **E4** displayed • Alarm icon permanently on	• Verify probe type (**H00**) • Verify the probe wiring • Replace probe
E5	Probe Pb5 in error	• Measured values are outside operating range • Probe inoperable/short-circuited/open	• Label **E5** displayed • Alarm icon permanently on	• Verify probe type (**H00**) • Verify the probe wiring • Replace probe
E6	Probe Pb6 in error (4...20 mA)	• Measured values are outside operating range • Probe inoperable/short-circuited/open	• Label **E6** displayed • Alarm icon permanently on	• Verify probe type • Verify the probe wiring • Replace probe
E7	Probe Pb7 in error (ratiometric)	• Measured values are outside operating range • Probe inoperable/short-circuited/open	• Label **E7** displayed • Alarm icon permanently on	• Verify probe type (**trA**) • Verify the probe wiring • Replace probe
EL	LINK^2 probe in error	• Measured values are outside operating range • Probe inoperable/short-circuited/open	• Label **EL** displayed • Alarm icon permanently on	• Verify probe type • Verify the probe wiring • Replace probe
Ei	VIRTUAL probe in error	• Measured values are outside operating range • Probe inoperable/short-circuited/open	• Label **Ei** displayed • Alarm icon permanently on	• Verify probe type • Verify the probe wiring • Replace probe
AH1	HIGH temperature alarm 1	Value read by probe1 > HA1 after time set in **tA1**. (see “max/min temp. alarm)	• Recording of label **AH1** in folder ALr • No effect on regulation.	Await return to normal of value read by the selected probe with **rA1** lower than **HA1-AFd**.
AL1	LOW temperature alarm 1	Value read by probe1 < LA1 after time set in **tA1**. (see “max/min temp. alarm)	• Recording of label **AL1** in folder ALr • No effect on regulation.	Await return to normal of value read by the selected probe with **rA1** higher than **LA1+AFd**.
AH2	HIGH temperature alarm 2	Value read by probe2 > HA2 after time set in **tA2**. (see “max/min temp. alarm)	• Recording of label **AH2** in folder ALr • No effect on regulation.	Await return to normal of value read by the selected probe with **rA2** lower than **HA2-AFd**.
AL2	LOW temperature alarm 2	Value read by probe2 < LA2 after time set in **tA2**. (see “max/min temp. alarm)	• Recording of label **AL2** in folder ALr • No effect on regulation.	Await return to normal of value read by the selected probe with **rA2** higher than **LA2+AFd**.
EA	External alarm	Digital input activated	• Recording of label **EA** in folder ALr • Alarm icon permanently on • Lockout of regulation as requested by **EAL**	Verify and remove external cause of alarm on DI

Label	Description	Cause	Effects	Troubleshooting
OPd	Door open alarm	Digital input activated (for a time greater than **tdO**)	• Recording of label **Opd** in folder ALr • Alarm icon permanently on • Lockout of regulation as requested by **dOd**	• Close the door • Delay preceding indication of alarm defined by **OAO**.
Ad2	End of Defrost due to timeout	End of defrost cycle due to timeout rather than due to defrosting end temperature being read by defrost control probe.	• Recording of label **Ad2** in folder ALr • Alarm icon permanently on	Await next defrost cycle for automatic return to normal
Prr	Preheat alarm	Alarm for preheat input regulator ON	• Label **Prr** displayed • Compressor icon blinking • Regulation inhibited (Compressor and Fans) **NOTE**: defrost will also be blocked if it is reverse cycle or hot gas defrost.	Preheat input regulator off.
E10	Clock Alarm	• Clock (RTC) low battery • RTC inoperable	• Recording of label **E10** in folder ALr • Functions associated with clock not available	Reset the time in the “Machine State” menu
EEP	Valve MOP alarm valve	Saturation temperature has exceeded the threshold value set via the **Hot** parameter	• Label **EEP** recorded in folder ALr • Alarm icon permanently on	The temperature returns below the **Hot** value.
EEt	Max valve outlet alarm valve output	The outlet valve is integraly open (see parameter **U02**)	• Label **EEt** recorded in folder ALr • Alarm icon permanently on	• Verify the valve connection • Verify the connection/operation of the overheating probe
EES	Saturation probe error	• Measured values are outside operating range • Probe inoperable/short-circuited/open	• Label **EES** displayed • Alarm icon permanently on	• Verify the probe type (**rSP**) • Verify the probe wiring • Replace probe

10.2. DESCRIPTION OF ALARMS

10.2.1. Probe alarm

OPERATING CONDITIONS

When one of the probes is out of the nominal operating range or in the case of an open probe or a probe in short-circuit, an alarm is generated if this condition persists for longer than 10 seconds.

The alarm condition is indicated on the display by means of the following error codes:

- **E1** = Probe Pb1 not working;
- **E2** = Probe Pb2 not working;
- **E3** = Probe Pb3 not working;
- **E4** = Probe Pb4 not working;
- **E5** = Probe Pb5 not working;
- **E6** = Probe Pb6 not working;
- **E7** = Probe Pb7 not working;
- **EL** = Link[2] probe not working;
- **Ei** = VIRTUAL probe not working.

The alarm LED and alarm relay are activated.

Codes **E1**, **E2**, **E3**, **E4**, **E5**, **E6**, **E7**, **EL** and **Ei**, when occuring at the same time, are shown in the following sequence: E1 x 2 s, E2 x 2 s, E3 x 2 s, etc.

ACTIONS ON CURRENT REGULATION

For all probes, the error probe condition causes the following actions:

- the display shows code E**x** (where **x** = 1, 2, 3, 4, 5, 6, 7, L , i)
- activation and permanent display of alarm icon and activation of alarm relay (if present)

When the error probe condition ceases, regulation resumes as normal.
During the error probe condition, the defrost interval count continues as normal.

SIGNALLING

Code	Meaning
E1	Pb1 probe inoperable
E2	Pb2 probe inoperable
E3	Pb3 probe inoperable
E4	Pb4 probe inoperable
E5	Pb5 probe inoperable
E6	Pb6 probe inoperable
E7	Pb7 probe inoperable
EL	LINK[2] probe inoperable
Ei	VIRTUAL probe inoperable

ALARM ACKNOWLEDGMENT

In the alarm condition, it is possible to acknowledge the alarm and/or relay configured as an alarm, even if the alarm condition persists, by pressing any key or using the corresponding function in the menu
The alarm LED will start to blink.
The disappearance of the alarm cause disarms the acknowledgement.
The error probe alarm is not stored by the device.

USER PARAMETERS

Label	Description
Ont	ON time for compressor output with inoperable control probe
OFt	OFF time for compressor output with inoperable control probe

10.2.2. Max/min temperature alarm

OPERATING CONDITIONS

The alarm regulation is carried out on probe 1.
The temperature limits defined in parameters **HA1/2** and **LA1/2** are determined by parameter **Att** which specifies if they represent the absolute temperature value (**AbS**) or a setpoint differential (**rEL**) (in the case of offset on the entered setpoint, the high and low alarms will refer to this new control setpoint).

- If **Att** = **AbS**(0), the temperature limits for probe 1/2 are absolute.
- If **Att** = **rEL**(1), the temperature limits for probe 1/2 refer to the **SP1/2**.

NOTE: to obtain the minimum alarm below the setpoint in the case of **Att**=1 (relative) it is necessary to set **LA1/2**<0.

ALARM CONDITIONS

A maximum/minimum alarm is generated when the Pb1 temperature is:

- Maximum alarm: ≥ **HA1/2** if **Att = AbS**(0) and ≥ than (**SP1/2 + HA1/2**) if **Att = rEL**(1)
- Minimum alarm: ≤ **LA1/2** if **Att = AbS**(0) and ≤ than (**SP1/2 + LA1/2**) if **Att = rEL**(1)

If **Att = AbS**(0) set **HA1/2 and LA1/2** with sign. If **Att = rEL**(1) set **HA1/2 > 0** and **LA1/2 < 0**.

When one of the two aforementioned conditions occurs, if no alarm override times apply (see alarm override parameters), the alarm LED lights up and the relay configured as alarm activates (if present).

The maximum/minimum alarm will be reset when the temperature of probe 1/2 is:

- Returning from max alarm: ≤ (**HA1/2 - AFd**) if **Att = AbS**(0) and ≤ (**SP1/2 + HA1/2 - AFd**) if **Att = rEL**(1)
- Returning from min alarm: ≥ (**LA1/2 + AFd**) if **Att = AbS**(0) and ≥ (**SP1/2 + LA1/2 + AFd**) if **Att = rEL**(1)

TEMPERATURE AS AN ABSOLUTE VALUE (Att=0)

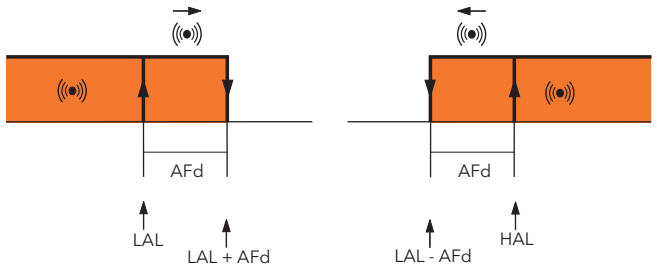

TEMPERATURE AS A VALUE RELATIVE TO SP1/2 (Att=1)

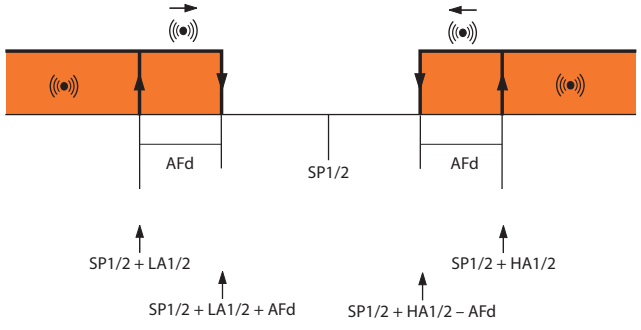

NOTES: • During a defrost cycle, high and low temperature alarms are overridden.
• Occurrence of this alarm does not effect any regulation in progress.

SIGNALLING

Code	Meaning
AH1/2	HIGH temperature alarm, refers to probe 1/2
AL1/2	LOW temperature alarm, refers to probe 1/2

ALARM ACKNOWLEDGMENT

In the alarm condition, it is possible to acknowledge the relay configured as an alarm (if present), even if the alarm condition persists, by pressing any key or using the corresponding function in the menu.
The alarm LED will start to blink.
The disappearance of the alarm cause disarms the acknowledgement.
The error probe alarm is not stored by the device.

USER PARAMETERS

Label	Description
Att	HAL and LAL parameter mode (absolute or relative)
AFd	Alarm activation differential
HA1	Probe 1 maximum alarm threshold
LA1	Probe 1 minimum alarm threshold
HA2	Probe 2 maximum alarm threshold
LA2	Probe 2 minimum alarm threshold
PAO	Temperature alarm exclusion time from power-on
dAO	Temperature alarm disabling time after defrost cycle
OAO	High/low temperature alarm exclusion time after door closing
tA1	Temperature 1 alarms delay time
tA2	Temperature 2 alarms delay time

10.2.3. End of defrost due to timeout alarm

OPERATING CONDITIONS

The regulator is activated without any delay in the case of end of defrost due to timeout, instead of probe 2 reaching the defrost end temperature.

The action consists of:

- alarm LED on fixed
- recording of label **Ad2** in the alarms menu.

Automatic reset occurs with the start of the next defrost cycle.

The alarm LED can be switched off using the normal acknowledgement procedure, although the alarm signal is only actually cancelled at the start of the next defrost cycle.

SIGNALLING

Code	Meaning
Ad2	Defrost alarm on Pb2

USER PARAMETERS

Label	Description
dE1	Evaporator 1 defrost timeout
dE2	Defrost timeout, evaporator 2
dAt	Alarm signalling end of defrost due to timeout

10.2.4. External alarm

OPERATING CONDITIONS

In the case of activation of the digital input, the alarm regulator is activated with the delay set by parameter **dAd**, and this alarm persists until the next time the digital input is deactivated.

The action consists of:

- alarm LED on fixed
- recording of label **EA** in the alarms menu
- activation of the relay configured as alarm (if enabled)
- deactivation of regulation if parameter **rLO** requires it.

It is possible to release the alarm relay but the regulators still remain locked until the next time the digital input is deactivated.

The values that can be assigned to parameter **EAL** are:

- **EAL = 0**: an external alarm has not locked any resource;
- **EAL = 1**: an external alarm has locked the compressor and defrost;
- **EAL = 2**: an external alarm has locked the compressor, defrost and the fans.

SIGNALLING

Code	Meaning
EA	External alarm

USER PARAMETERS

Label	Description
EAL	An external alarm blocks the regulators

10.2.5. Door open alarm

OPERATING CONDITIONS

The door switch alarm is associated to a specially configured digital input:

- **H11, H12, H13, H14, H15, H16, H17 or H18 = ± 8**

On activation of the digital input (door open) and after delay **tdO** has elapsed, the door open alarm is signalled in the alarms folder and the LED and alarm relay come on. The **OPd** label is displayed.
The action consists of:

- alarm LED on fixed
- recording of label **OPd** in the alarms menu.
- activation of the relay configured as alarm

As in the case of the other alarms, the relay may be deactivated by pressing an acknowledgement key, the alarm LED will blink and label **OPd** will remain in the alarms menu until the door is closed.

If the door is opened, the regulator will operate on the basis of the value of parameter **dOd**.
The values that can be assigned to it are:

- **dOd = 0**: does not inhibit any resource
- **dOd = 1**: inhibits the fans (FAN)
- **dOd = 2**: inhibits the compressor (COMPR)
- **dOd = 3**: inhibits the fans (FAN) and the compressor (COMPR)

If the door open alarm locks the compressor, it can still be reactivated even if the door remains open, by setting the parameter **dCO**.

SIGNALLING

Code	Meaning
OPd	Door open alarm

USER PARAMETERS

Label	Description
dOd	Digital input for switching off loads: **0** = disabled **1** = disables the fans **2** = disables the compressor **3** = disable fans and compressor.
dOA	Action forced from digital input (if **PEA** ≠ 0): **0** = activate compressor; **1** = activate fans; **2** = activate compressor and fans; **3** = deactivate compressor; **4** = deactivate fans; **5** = deactivate compressor and fans.
PEA	Selection of digital input configured to inhibit/enable resources. **0** = function disabled; **1** = associated with door switch; **2** = associated with external alarm; **3** = associated with external alarm and door switch.
dCO	Compressor activation delay from acknowledgement
dFO	Fan activation/deactivation delay when enabled (DI activation).
tdO	Open door disabling time

CHAPTER 11
MODBUS MSK 639 FUNCTIONS AND RESOURCES

Modbus is a client/server protocol for communication between devices connected in a network. Modbus devices communicate using a master-slave technique in which only one device (master) can send messages. The other devices in the network (slave) respond, returning the data requested by the master or executing the action contained in the message sent. A slave is a device connected to a network that processes information and sends the results to the master using the Modbus protocol.

The master device can send messages to individual slaves or to the entire network (broadcast) whilst slave devices only respond individually to the master device.

The Modbus standard used by Eliwell employs the RTU code for data transmission.

11.1. DATA FORMAT (RTU)

The type of coding used defines the structure of messages transmitted on the network and the way in which this information is deciphered. The type of coding is usually selected on the basis of specific parameters (baud rate, parity, stop); furthermore, some devices support only specific type of coding. Use the same type of coding for all devices connected in a Modbus network.

The protocol uses the RTU binary method with bytes configured as follows:

- **8 bit for data**
- **bit parity NONE (configurable)**
- **2 stop BIT**

The device is used to set the parameters

They can be modified through:

- Device keyboard
- UNICARD/DMI/MFK
- Sending data via Modbus protocol directly to an individual controller or broadcasting it using the address **0** (broadcast).

11.1.1. Network

The connection diagram when using Modbus is shown below:

Modbus connection via RS485

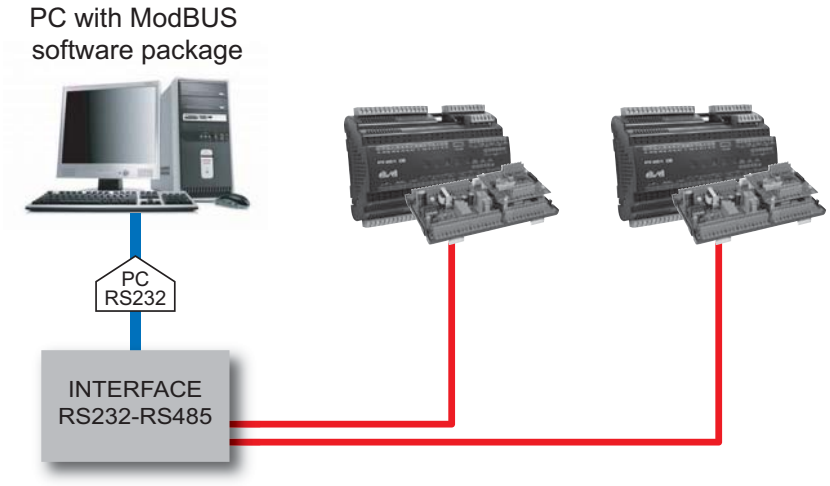

11.1.2. Modbus commands available and data areas

The following commands are implemented:

Modbus command	Description of command
03 (hex 0x03)	Read 16 consecutive registers for Client side. Read 1 single register for parameters.
16 (hex 0x10)	Write 15 consecutive registers for Client side. Write 1 register for the parameters.
43 (hex 0x2B)	Read device ID. It is possible to read the following 3 fields: • **0** = manufacturer ID • **1** = Device model/polycarbonate ID • **2** = Family ID (MSK 639)/device version

Length restrictions

Maximum length in bytes of messages sent to device	30 BYTE
Maximum length in bytes of messages received from the device	30 BYTE

11.1.3. Address configuration

The serial **TTL** - which we will call COM1 – can be used to configure the device, parameters, states, and variables with Modbus via the Modbus protocol.

The address of a device within a Modbus message is set using the parameter **Adr**.

The address **0** is used for broadcast messages that all slaves recognise.
Slaves do not respond to broadcast messages.

The parameters for configuring the device are:

Parameter	Description	Value	Range
Adr	Modbus protocol controller address	**0**	1 ... 250
Pty	Set the parity BIT of the Modbus protocol and the stop BIT number: • n = parity bit NONE + 2 BIT stop • E = parity bit EVEN + 1 BIT stop • o = parity bit ODD + 1 BIT stop	**n**	n/E/o
bAU	Baudrate selection	**96**	• 96 = 9600 • 192 = 19200 • 384 = 38400

NOTE: Switch off and switch on again the controller after modification of the **Pty**.

11.1.4. PARAMETER VISIBILITY AND VALUES

NOTES:

- Unless otherwise indicated, the parameter is always visible and modifiable, unless customized settings have been configured via serial.
- If folder visibility is modified, the new setting will apply to all parameters in the folder.

11.2. MODBUS TABLES

The tables below list all information required to read, write and decode all accessible resources in the device.

There are 3 tables:

- **PARAMETERS TABLE**: contains all the device configuration parameters including visibility
- **FOLDER VISIBILITY TABLE**: contains the visibility of the folders containing the parameters
- **CLIENT TABLE**: contains all I/O and alarm status resources available in the volatile memory of the device.

Description of columns:

FOLDER

Indicates the label of the folder containing the parameter in question.

LABEL

Indicates the label used to display the parameters in the menu of the device.

PAR. VALUE ADDR

The whole part represents the address of the MODBUS register containing the value of the resource to be read or written in the device. The value after the decimal point indicates the position of the most significant data bit inside the register; if not indicated it is taken to be zero.

This information is always provided when the register contains more than one information item, and it is necessary to distinguish which bits actually represent the data (the working size of the data indicated in the column DATA SIZE is also taken into consideration).

Given that the modbus registers have the size of one WORD (16 bit), the index number after the point can vary from 0 (least significant bit -LSb-) to 15 (most significant bit -MSb-)

Examples (in binary form the least significant bit is the first on the right):

PAR. VALUE ADDRESS	DATA SIZE	VALUE	Content of register	
8806	WORD	1350	1350	(0000010101000110)
8806	BYTE	70	1350	(00000101**01000110**)
8806.8	BYTE	5	1350	(**00000101**01000110)
8806.14	1 BIT	0	1350	(0000010101000110)
8806.7	4 BIT	10	1350	(00000**1010**1000110)

NOTE:

When the register contains more than one piece of data, the write procedure is as follows:

- Read current value of register
- Modify bits for the resource concerned
- Write register

VIS PAR. ADDR

The same as above. In this case, the MODBUS register address contains the visibility value of the parameter. By default all parameters have:

- Data size: 2 bit
- Range: 0…3
- **Visibility: 3
- U.M.: num

****Value Meaning**

- Value 3 = parameter or folder always visible
- Value 2 = manufacturer level; these parameters can only be viewed by entering the manufacturer password (see parameter PS2)
  (all parameters specified as always visible will be visible, as will parameters visible at installer level)

- Value 1 = installer level; these parameters can only be viewed by entering the installation password (see parameter PS1)
  (all parameters specified as always visible will be visible, as will parameters visible at installer level)
- Value 0 = parameter or folder NOT visible

1. Parameters and/or folders with a level of visibility <>3 (password-protected) will be visible only if the correct password is entered (installer or manufacturer) following this procedure:
2. Parameters and/or folders with a level of visibility =3 are always visible even without a password: in this case, the following procedure is not necessary.

Examples (in binary form the least significant bit is the first on the right)**:**

PAR. VALUE ADDRESS	DATA SIZE	VALUE	Content of register	
49336.6	2 BIT	3	65535	----------(00000000**11**11111111111111)
49337	2 BIT	3	65535	(0000000011111**11**111111111)
49337.2	2 BIT	3	65535	(0000000011**11**1111111111)
49337.4	2 BIT	3	65535	(0000000**11**111111111111)
49337.6	2 BIT	3	65535	(00000000**11**11111111111111)

R/W

Indicates the option of reading or writing the resource

- R = the resource is read-only
- W = the resource is write-only
- RW = the resource can be both read and written

DESCRIPTION

This is the description of the meaning of parameters in the LABEL column.

DATA SIZE

Indicates the size of the data in bits.

- WORD = 16 bit
- Byte = 8 bit
- “n” bit = 0...15 bit based on the value of “n”

CPL

When the field indicates “Y”, the value read by the register needs to be converted because the value represents a number with a sign. In the other cases the value is always positive or null.

To carry out conversion, proceed as follows:

- If the value in the register is between 0 and 32.767, the result is the value itself (zero and positive values)
- If the value in the register is between 32.768 and 65.535, the result is the value of the register – 65.536 (negative values)

RANGE

Describes the interval of values that can be assigned to the parameter. It can be correlated with other parameters in the device (indicated with the parameter label).

MU

Unit of measure for values converted according to the rules indicated in the CPL column.

11.2.1. Parameters/visibility table

FOLDER	LABEL	PAR. VALUE ADDR.	VIS PAR. ADDR.	R/W	DESCRIPTION	DATA SIZE	CPL	RANGE	MU
CP	rE	32892	38144.0	RW	Regulation mode	WORD		0...5	num
CP	rP1	32893	38144.1	RW	Control probe 1	WORD		0...8	num
CP	rP2	32894	38144.2	RW	Thermostat 2 regulation probe	WORD		0...8	num
CP	SP1	32895	38144.3	RW	Setpoint	WORD	Y	LS1...HS1	°C/°F
CP	dF1	32896	38144.4	RW	Differential/proportional band	WORD	Y	-58.0...302	°C/°F
CP	SP2	32897	38144.5	RW	Setpoint according to thermostat	WORD	Y	LS2...HS2	°C/°F
CP	dF2	32898	38144.6	RW	Differential according to thermostat	WORD	Y	-58.0...302	°C/°F
CP	Stt	32901	38144.7	RW	Differential control mode	WORD		0/1	flag
CP	HS1	32904	38145.0	RW	Maximum SP1 value	WORD	Y	LS1...HdL	°C/°F
CP	LS1	32905	38145.1	RW	Minimum SP1 value	WORD	Y	LdL...HS1	°C/°F
CP	HS2	32906	38145.2	RW	Maximum SP2 value	WORD	Y	LS2...HdL	°C/°F
CP	LS2	32907	38145.3	RW	Minimum SP2 value	WORD	Y	LdL...HS2	°C/°F
CP	HC1	32902	38145.4	RW	Thermostat mode 1	WORD		0/1	flag
CP	HC2	32903	38145.5	RW	Thermostat mode 2	WORD		0/1	flag
CP	Cit	32912	38145.7	RW	Minimum compressor ON time	WORD		0...250	min
CP	CAt	32913	38146.0	RW	Maximum compressor ON time	WORD		0...250	min
CP	Ont	32918	38146.1	RW	Probe error ON time	WORD		0...250	min
CP	OFt	32919	38146.2	RW	Probe error OFF time	WORD		0...250	min
CP	dOn	32914	38146.3	RW	Delayed start	WORD		0...250	s
CP	dOF	32915	38146.4	RW	Delay after switching off	WORD		0...250	min
CP	dbi	32916	38146.5	RW	Time lag between starts	WORD		0...250	min
CP	OdO	32917	38146.6	RW	Output activation delay from power-on	WORD		0...250	min
CP	OF1	32923	38147.3	RW	Remote offset	WORD	Y	-50.0...50.0	°C/°F
CP	SS1	33030	38178.4	RW	Compressor Softstart: hotgas valve opening advance	WORD		0...250	s
CP	SS2	33031	38178.5	RW	Compressor Softstart: hotgas valve opening delay	WORD		0...250	s
dEF	dP1	32924	38147.4	RW	Defrost probe 1 selection	WORD		0...8	num
dEF	dP2	32925	38147.5	RW	Defrost probe 2 selection	WORD		0...8	num
dEF	dtY	32928	38147.6	RW	Defrost mode	WORD		0...4	num
dEF	dFt	32926	38147.7	RW	Defrost activation mode with two probes	WORD		0/1/2	num
dEF	dit	32929	38148.0	RW	Interval between defrost cycles	WORD		0...250	hours/ dt1
dEF	dt1	32932	38148.1	RW	Unit of measurement for defrost interval	WORD		0/1/2	num
dEF	dt2	32933	38148.2	RW	Unit of measurement for defrost duration	WORD		0/1/2	num
dEF	dCt	32927	38148.3	RW	Defrost interval count mode	WORD		0...5	num
dEF	dOH	32934	38148.4	RW	Defrost interval count mode	WORD		0...250	min
dEF	dE1	32930	38148.5	RW	Evaporator 1 defrost timeout	WORD		1...250	min/dt2
dEF	dE2	32931	38148.6	RW	Evaporator 2 defrost timeout	WORD		1...250	min/dt2
dEF	dS1	32936	38148.7	RW	Probe 1 defrost end temperature	WORD	Y	-58.0...302	°C/°F
dEF	dS2	32937	38149.0	RW	Probe 2 defrost end temperature	WORD	Y	-58.0...302	°C/°F
dEF	dSS	32935	38149.1	RW	Start defrost temperature threshold	WORD	Y	-58.0...302	°C/°F
dEF	dPO	32938	38149.2	RW	Defrost activation request from power-on	WORD		0/1	flag
dEF	tcd	32939	38149.3	RW	Minimum compressor ON or OFF time before defrost	WORD	Y	-60...60	min
dEF	ndE	32940	38149.4	RW	Minimum defrost time (hot gas only)	WORD		0...250	min
dEF	PdC	32941	38149.5	RW	Hot gas extraction time at defrost end	WORD		0...250	min
dEF	tPd	32943	38149.6	RW	Pump down time before defrost startup	WORD		0...255	min
dEF	dPH	32882	38149.7	RW	Periodic start defrost hour	WORD		0...24	hours
dEF	dPn	32883	38150.0	RW	Periodic start defrost minutes	WORD		0...59	min
dEF	dPd	32884	38150.1	RW	Regular defrost interval duration	WORD		1...7	day
dEF	Fd1	32831	38150.2	RW	Weekend/public holiday 1	WORD		0...7	num
dEF	Fd2	32832	38150.3	RW	Weekend/public holiday 2	WORD		0...7	num
dEF	Edt	32833	38150.4	RW	Custom duration and temperature for each event	WORD		0/1	flag
dEF	d1H	32834	38150.5	RW	Start time hour weekday defrost 1	WORD		0...24	hours

FOLDER	LABEL	PAR. VALUE ADDR.	VIS PAR. ADDR.	R/W	DESCRIPTION	DATA SIZE	CPL	RANGE	MU
dEF	d1n	32835	38150.6	RW	Start time minutes weekday defrost 1	WORD		0...59	min
dEF	d1t	32836	38150.7	RW	Weekday defrost 1 duration	WORD		0...250	min
dEF	d1S	32837	38151.0	RW	Weekday defrost 1 end temperature	WORD	Y	-58.0...302	°C/°F
dEF	d2H	32838	38151.1	RW	Start time hour weekday defrost 2	WORD		d1H...24	hours
dEF	d2n	32839	38151.2	RW	Start time minutes weekday defrost 2	WORD		0...59	min
dEF	d2t	32840	38151.3	RW	Weekday defrost 2 duration	WORD		0...250	min
dEF	d2S	32841	38151.4	RW	Weekday defrost 2 end temperature	WORD	Y	-58.0...302	°C/°F
dEF	d3H	32842	38151.5	RW	Start time hour weekday defrost 3	WORD		d2H...24	hours
dEF	d3n	32843	38151.6	RW	Start time minutes weekday defrost 3	WORD		0...59	min
dEF	d3t	32844	38151.7	RW	Weekday defrost 3 duration	WORD		0...250	min
dEF	d3S	32845	38152.0	RW	Weekday defrost 3 end temperature	WORD	Y	-58.0...302	°C/°F
dEF	d4H	32846	38152.1	RW	Start time hour weekday defrost 4	WORD		d3H...24	hours
dEF	d4n	32847	38152.2	RW	Start time minutes weekday defrost 4	WORD		0...59	min
dEF	d4t	32848	38152.3	RW	Weekday defrost 4 duration	WORD		0...250	min
dEF	d4S	32849	38152.4	RW	Weekday defrost 4 end temperature	WORD	Y	-58.0...302	°C/°F
dEF	d5H	32850	38152.5	RW	Start time hour weekday defrost 5	WORD		d4H...24	hours
dEF	d5n	32851	38152.6	RW	Start time minutes weekday defrost 5	WORD		0...59	min
dEF	d5t	32852	38152.7	RW	Weekday defrost 5 duration	WORD		0...250	min
dEF	d5S	32853	38153.0	RW	Weekday defrost 5 end temperature	WORD	Y	-58.0...302	°C/°F
dEF	d6H	32854	38153.1	RW	Start time hour weekday defrost 6	WORD		d5H...24	hours
dEF	d6n	32855	38153.2	RW	Start time minutes weekday defrost 6	WORD		0...59	min
dEF	d6t	32856	38153.3	RW	Weekday defrost 6 duration	WORD		0...250	min
dEF	d6S	32857	38153.4	RW	Weekday defrost 6 end temperature	WORD	Y	-58.0...302	°C/°F
dEF	F1H	32858	38153.5	RW	Start time hour weekend/public holiday defrost 1	WORD		0...24	hours
dEF	F1n	32859	38153.6	RW	Start time minutes weekend/public holiday defrost 1	WORD		0...59	min
dEF	F1t	32860	38153.7	RW	Weekend/public holiday defrost 1 duration	WORD		0...250	min
dEF	F1S	32861	38154.0	RW	Weekend defrost 1 end temperature	WORD	Y	-58.0...302	°C/°F
dEF	F2H	32862	38154.1	RW	Start time hour weekend/public holiday defrost 2	WORD		F1H...24	hours
dEF	F2n	32863	38154.2	RW	Start time minutes weekend/public holiday defrost 2	WORD		0...59	min
dEF	F2t	32864	38154.3	RW	Weekend/public holiday defrost 2 duration	WORD		0...250	min
dEF	F2S	32865	38154.4	RW	Weekend defrost 1 end temperature	WORD	Y	-58.0...302	°C/°F
dEF	F3H	32866	38154.5	RW	Start time hour weekend/public holiday defrost 3	WORD		F2H...24	hours
dEF	F3n	32867	38154.6	RW	Start time minutes weekend/public holiday defrost 3	WORD		0...59	min
dEF	F3t	32868	38154.7	RW	Weekend/public holiday defrost 3 duration	WORD		0...250	min
dEF	F3S	32869	38155.0	RW	Weekend defrost 1 end temperature	WORD	Y	-58.0...302	°C/°F
dEF	F4H	32870	38155.1	RW	Start time hour weekend/public holiday defrost 4	WORD		F3H...24	hours
dEF	F4n	32871	38155.2	RW	Start time minutes weekend/public holiday defrost 4	WORD		0...59	min
dEF	F4t	32872	38155.3	RW	Weekend/public holiday defrost 4 duration	WORD		0...250	min
dEF	F4S	32873	38155.4	RW	Weekend defrost 1 end temperature	WORD	Y	-58.0...302	°C/°F
dEF	F5H	32874	38155.5	RW	Start time hour weekend/public holiday defrost 5	WORD		F4H...24	hours
dEF	F5n	32875	38155.6	RW	Start time minutes weekend/public holiday defrost 5	WORD		0...59	min
dEF	F5t	32876	38155.7	RW	Weekend/public holiday defrost 5 duration	WORD		0...250	min
dEF	F5S	32877	38156.0	RW	Weekend defrost 1 end temperature	WORD	Y	-58.0...302	°C/°F
dEF	F6H	32878	38156.1	RW	Start time hour weekend/public holiday defrost 6	WORD		F5H...24	hours
dEF	F6n	32879	38156.2	RW	Start time minutes weekend/public holiday defrost 6	WORD		0...59	min
dEF	F6t	32880	38156.3	RW	Weekend/public holiday defrost 6 duration	WORD		0...250	min
dEF	F6S	32881	38156.4	RW	Weekend defrost 6 end temperature	WORD	Y	-58.0...302	°C/°F
FAn	FP1	32944	38156.5	RW	Evaporator fan probe in normal mode	WORD		0...8	num
FAn	FP2	32945	38156.6	RW	Evaporator fan probe during defrost	WORD		0...8	num
FAn	FPt	32946	38156.7	RW	FSt parameter mode	WORD		0/1	flag
FAn	FSt	32947	38157.0	RW	Fans disabling temperature	WORD	Y	-58.0...302	°C/°F
FAn	FAd	32948	38157.1	RW	Fans differential	WORD		0.1...25.0	°C/°F
FAn	Fdt	32949	38157.2	RW	Fan activation delay from compressor start	WORD		0...250	min
FAn	dt	32954	38157.3	RW	Dripping time	WORD		0...250	min

FOLDER	LABEL	PAR. VALUE ADDR.	VIS PAR. ADDR.	R/W	DESCRIPTION	DATA SIZE	CPL	RANGE	MU
FAn	dFd	32952	38157.4	RW	Evaporator fans mode in defrost	WORD		0/1	flag
FAn	FCO	32951	38157.5	RW	Evaporator fans mode	WORD		0...4	num
FAn	FdC	32950	38157.7	RW	Fan switch-off delay from compressor stoppage	WORD		0...250	min
FAn	FOn	32955	38158.0	RW	Fans ON time in duty cycle	WORD		0...250	min
FAn	FOF	32956	38158.1	RW	Fans OFF time in duty cycle	WORD		0...250	min
FAn	Fnn	32957	38158.2	RW	Duty cycle on time during night mode	WORD		0...250	min
FAn	FnF	32958	38158.3	RW	Duty cycle off time during night mode	WORD		0...250	min
AL	rA1	32972	38158.4	RW	Temperature alarm probe 1 selection	WORD		0...7	num
AL	rA2	32973	38158.5	RW	Temperature alarm probe 2 selection	WORD		0...7	num
AL	Att	32974	38158.6	RW	HAL and LAL parameter mode	WORD		0/1	flag
AL	AFd	32975	38158.7	RW	Alarm setpoint differential	WORD		0.1...25.0	°C/°F
AL	HA1	32976	38159.0	RW	Probe 1 maximum alarm	WORD	Y	LA1...302	°C/°F
AL	LA1	32977	38159.1	RW	Probe 1 minimum alarm	WORD	Y	-58.0...HA1	°C/°F
AL	HA2	32978	38159.2	RW	Probe 2 maximum alarm	WORD	Y	LA2...302	°C/°F
AL	LA2	32979	38159.3	RW	Probe 2 minimum alarm	WORD	Y	-58.0...HA2	°C/°F
AL	PAO	32980	38159.4	RW	Alarm exclusion at power-on	WORD		0...10	hours
AL	dAO	32982	38159.5	RW	Alarm exclusion after defrost	WORD		0...250	min
AL	OAO	32981	38159.6	RW	Alarm signalling delay from door closure	WORD		0...10	hours
AL	tdO	33026	38159.7	RW	Open door disabling time	WORD		0...250	min
AL	tA1	32983	38160.0	RW	Alarm LA1 and HA1 signalling delay time	WORD		0...250	min
AL	tA2	32984	38160.1	RW	Alarm LA2 and HA2 signalling delay time	WORD		0...250	min
AL	dAt	32942	38160.2	RW	Enable alarm at end of defrost	WORD		0/1	flag
AL	EAL	32986	38160.3	RW	External alarm switches off loads	WORD		0/1/2	num
AL	tP	33027	38160.4	RW	Enable all keys to acknowledge an alarm	WORD		0/1	flag
AL	Art	32971	38160.5	RW	Link supervision alarm activation period	WORD		0...250	min*10
Lit	dSd	32968	38160.6	RW	Enable light relay from door switch	WORD		0/1	flag
Lit	dLt	32969	38160.7	RW	Light relay deactivation delay	WORD		0...250	min
Lit	OFL	32970	38161.0	RW	Light key always disables light relay	WORD		0/1	flag
Lit	dOd	32985	38161.1	RW	Door switch switches off loads	WORD		0...3	num
Lit	dOA	32987	38161.2	RW	Action forced by digital input	WORD		0...5	num
Lit	PEA	32988	38161.3	RW	Select DI for lock/unlock resources function	WORD		0...3	num
Lit	dCO	32989	38161.4	RW	Evaporator fan compressor activation/switch-off delay	WORD		0...250	min
Lit	dFO	32990	38161.5	RW	Evaporator fan activation/switch-off delay	WORD		0...250	min
Lit	ASb	33016	38161.6	RW	AUX/Light active in OFF key/input	WORD		0/1	flag
Lin	L00	32768	38161.7	RW	Probe sharing	WORD		0...7	num
Lin	L01	32769	38162.0	RW	Displayed value sharing	WORD		0/1/2	num
Lin	L02	32770	38162.1	RW	Send Setpoint value when modified	WORD		0/1	flag
Lin	L03	32771	38162.2	RW	Send defrost request	WORD		0/1/2	num
Lin	L04	32772	38162.3	RW	End defrost mode	WORD		0/1	flag
Lin	L05	32773	38162.4	RW	Standby command synchronisation	WORD		0/1	flag
Lin	L06	32774	38162.5	RW	Lights command synchronisation	WORD		0/1	flag
Lin	L07	32775	38162.6	RW	Reduced setpoint command synchronisation	WORD		0/1	flag
Lin	L08	32776	38162.7	RW	AUX command synchronisation	WORD		0/1	flag
Lin	L09	32777	38163.0	RW	Share saturation probe (pressure)	WORD		0/1	flag
Lin	L10	33028	38163.1	RW	Timeout waiting for end of dependent defrosts	WORD		0...250	min
Lin	L11	32778	38180.2	RW	Number of devices connected in Link² for alarm	WORD		0...8	min
Lin	L12	32779	38180.3	RW	Alarm sharing	WORD		0/1/2	min
dEC	dCS	32962	38163.4	RW	Deep Cooling setpoint	WORD	Y	-58.0...302	°C/°F
dEC	tdc	32963	38163.5	RW	Deep Cooling Duration	WORD		0...250	min
dEC	dcc	32964	38163.6	RW	Wait for defrost cycle start	WORD		0...250	min
EnS	ESt	32891	38163.7	RW	Type of Energy Saving	WORD		0...4	num
EnS	ESF	32959	38164.0	RW	Night activation mode	WORD		0/1	flag
EnS	Cdt	32960	38164.1	RW	Min. door closing time for reduced set activation	WORD		0...255	min*10

FOLDER	LABEL	PAR. VALUE ADDR.	VIS PAR. ADDR.	R/W	DESCRIPTION	DATA SIZE	CPL	RANGE	MU
EnS	ESo	32961	38164.2	RW	Open door cumulative time	WORD		0...10	num
EnS	OS1	32908	38164.3	RW	Offset SP1	WORD	Y	-50.0...50.0	°C/°F
EnS	OS2	32909	38164.4	RW	Offset SP2	WORD	Y	-50.0...50.0	°C/°F
EnS	Od1	32910	38164.5	RW	Offset energy saving door 1	WORD	Y	-50.0...50.0	°C/°F
EnS	Od2	32911	38164.6	RW	Offset energy saving door 2	WORD	Y	-50.0...50.0	°C/°F
EnS	dn1	32899	38164.7	RW	dn1 Differential in energy saving mode 1	WORD	Y	-58.0...302	°C/°F
EnS	dn2	32900	38165.0	RW	dn2 Differential in energy saving mode 2	WORD	Y	-58.0...302	°C/°F
EnS	EdH	32885	38165.1	RW	Weekday Energy Saving start hour	WORD		0...24	hours
EnS	Edn	32886	38165.2	RW	Weekday Energy Saving start minutes	WORD		0...59	min
EnS	Edd	32887	38165.3	RW	Weekday Energy Saving duration	WORD		1...72	hours
EnS	EFH	32888	38165.4	RW	Weekend Energy Saving start hour	WORD		0...24	hours
EnS	EFn	32889	38165.5	RW	Weekend Energy Saving start minutes	WORD		0...59	min
EnS	EFd	32890	38165.6	RW	Weekend Energy Saving duration	WORD		1...72	hours
FrH	FH	32991	38165.7	RW	Regulation mode	WORD		0...8	num
FrH	FHt	32993	38166.0	RW	Frame Heater period	WORD		1...250	s*10
FrH	FH0	32994	38166.1	RW	Frame Heater setpoint	WORD	Y	-58.0...302	°C/°F
FrH	FH1	32995	38166.2	RW	Frame Heater offset	WORD		0.0...25.0	°C/°F
FrH	FH2	32996	38166.3	RW	Frame Heater range	WORD		-58.0...302	°C/°F
FrH	FH3	32997	38166.4	RW	Min percentage	WORD		0...100	%
FrH	FH4	32998	38166.5	RW	Maximum percentage/Duty Cycle Day	WORD		0...100	%
FrH	FH5	32999	38166.6	RW	Maximum percentage/Duty Cycle Night (ES)	WORD		0...100	%
FrH	FH6	33000	38166.7	RW	Percentage during defrost	WORD		0...100	%
Add	Adr	33157	38185.2	RW	ModBUS address	WORD		1...250	num
Add	bAU	33152	38185.3	RW	BaudRate	WORD		0/1/2	num
Add	Pty	33154	38185.4	RW	Parity (modbus protocol)	WORD		0/1/2	num
diS	LOC	33003	38167.0	RW	Keypad lock	WORD		0/1	flag
diS	PS1	33004	38167.1	RW	Password 1	WORD		0...250	num
diS	PS2	33005	38167.2	RW	Password 2	WORD		0...250	num
diS	ndt	33006	38167.3	RW	Display with decimal point	WORD		0/1	flag
diS	CA1	32812	38167.4	RW	Calibration Pb1	WORD	Y	-30.0...30.0	°C/°F
diS	CA2	32813	38167.5	RW	Calibration Pb2	WORD	Y	-30.0...30.0	°C/°F
diS	CA3	32814	38167.6	RW	Calibration Pb3	WORD	Y	-30.0...30.0	°C/°F
diS	CA4	32815	38167.7	RW	Calibration Pb4	WORD	Y	-30.0...30.0	°C/°F
diS	CA5	32816	38168.0	RW	Calibration Pb5	WORD	Y	-30.0...30.0	°C/°F
diS	CA6	32817	38168.1	RW	Calibration Pb6	WORD	Y	-30.0...30.0	bar/Psi
diS	CA7	32818	38168.2	RW	Calibration Pb7	WORD	Y	-30.0...30.0	bar/Psi
diS	LdL	33007	38168.3	RW	Minimum possible value	WORD	Y	-58.0...HdL	°C/°F
diS	HdL	33008	38168.4	RW	Maximum possible value.	WORD	Y	LdL...302	°C/°F
diS	ddL	33009	38168.5	RW	Lock display during defrost	WORD		0/1/2	num
diS	Ldd	33010	38168.6	RW	Unlock timeout “ddL”	WORD		0...250	min
diS	dro	33011	38168.7	RW	°C/°F selection. (0=°C, 1=°F)	WORD		0/1	flag
diS	SbP	33012	38169.0	RW	Bar/Psi selection	WORD		0/1	flag
diS	ddd	33013	38169.1	RW	Main Display	WORD		0...8	num
diS	ddE	33014	38169.2	RW	Fundamental display on ECHO	WORD		0...8	num
HCP	rPH	32965	38169.3	RW	HACCP alarm probe selection	WORD		0...5	num
CnF	trA	33163	38185.5	RW	Type of Ratiometric Probe	WORD		0...8	num
CnF	H00	32780	38169.4	RW	Type of Pb1-Pb2-Pb3-Pb4-Pb5 probes (0=NTC, 1=PTC, 2=Pt1000)	WORD		0/1/2	num
CnF	H02	33015	38169.5	RW	Key activation time	WORD		0...250	s
CnF	H03	33164	38185.6	RW	Lower limit probe 4-20 mA	WORD	Y	-1.0...H04	bar/Psi
CnF	H04	33165	38185.7	RW	Upper limit probe 4-20 mA	WORD	Y	H03...150.0	bar/Psi
CnF	H05	33166	38186.0	RW	Ratiometric probe lower limit	WORD	Y	-1.0...H06	bar/Psi
CnF	H06	33167	38186.1	RW	Ratiometric probe upper limit	WORD	Y	H05...150.0	bar/Psi
CnF	H08	33017	38169.6	RW	Stand-by mode	WORD		0/1/2	num
CnF	H11	32783	38169.7	RW	DI1 input configuration (Pb1)	WORD	Y	-17...17	num
CnF	H12	32784	38170.0	RW	DI2 input configuration (Pb2)	WORD	Y	-17...17	num

FOLDER	LABEL	PAR. VALUE ADDR.	VIS PAR. ADDR.	R/W	DESCRIPTION	DATA SIZE	CPL	RANGE	MU
CnF	H13	32785	38170.1	RW	DI3 input configuration (Pb3)	WORD	Y	-17...17	num
CnF	H14	32786	38170.2	RW	DI4 input configuration (Pb4)	WORD	Y	-17...17	num
CnF	H15	32787	38170.3	RW	DI5 input configuration (Pb5)	WORD	Y	-17...17	num
CnF	H16	32788	38170.4	RW	DI6 input configuration (Pb6)	WORD	Y	-17...17	num
CnF	H17	32789	38170.5	RW	DI7 input configuration (Pb7)	WORD	Y	-17...17	num
CnF	H18	32790	38170.6	RW	DI8 input configuration (DI)	WORD	Y	-17...17	num
CnF	dti	32799	38170.7	RW	Unit of measurement for digital input 1 and 2	WORD		0/1	num
CnF	d11	32791	38171.0	RW	DI1 activation signalling delay (Pb1)	WORD		0...255	min/dti
CnF	d12	32792	38171.1	RW	DI2 activation signalling delay (Pb2)	WORD		0...255	min/dti
CnF	d13	32793	38171.2	RW	DI3 activation signalling delay (Pb3)	WORD		0...255	min
CnF	d14	32794	38171.3	RW	DI4 activation signalling delay (Pb4)	WORD		0...255	min
CnF	d15	32795	38171.4	RW	DI5 activation signalling delay (Pb5)	WORD		0...255	min
CnF	d16	32796	38171.5	RW	DI6 activation signalling delay (Pb6)	WORD		0...255	min
CnF	d17	32797	38171.6	RW	DI7 activation signalling delay (Pb7)	WORD		0...255	min
CnF	d18	32798	38171.7	RW	DI8 activation signalling delay (DI)	WORD		0...255	min
CnF	H21	32820	38172.0	RW	Configurability of digital output 1	WORD		0...14	num
CnF	H22	32821	38172.1	RW	Configurability of digital output 2	WORD		0...14	num
CnF	H23	32822	38172.2	RW	Configurability of digital output 3	WORD		0...14	num
CnF	H24	32823	38172.3	RW	Configurability of digital output 4	WORD		0...14	num
CnF	H25	32824	38172.4	RW	Configurability of digital output 5	WORD		0...14	num
CnF	H27	32826	38172.6	RW	Configurability of digital output 7	WORD		0...14	num
CnF	H29	32827	38172.7	RW	Enable buzzer	WORD		0/1	flag
CnF	H31	33018	38173.0	RW	Configuration of UP key	WORD		0...9	num
CnF	H32	33019	38173.1	RW	Configuration of DOWN key	WORD		0...9	num
CnF	H33	33020	38173.2	RW	ESC key configuration	WORD		0...9	num
CnF	H34	33021	38173.3	RW	FREE 1 key configuration	WORD		0...9	num
CnF	H35	33022	38173.4	RW	FREE 2 key configuration	WORD		0...9	num
CnF	H36	33023	38173.5	RW	FREE 3 key configuration	WORD		0...9	num
CnF	H37	33024	38173.6	RW	FREE 4 key configuration	WORD		0...9	num
CnF	H41	32800	38173.7	RW	Pb1 input configuration (0=Disable, 1=DI, 2=H00)	WORD		0/1/2	num
CnF	H42	32801	38174.0	RW	Pb2 input configuration (0=Disable, 1=DI, 2=H00)	WORD		0/1/2	num
CnF	H43	32802	38174.1	RW	Pb3 input configuration (0=Disable, 1=DI, 2=H00)	WORD		0/1/2	num
CnF	H44	32803	38174.2	RW	Pb4 input configuration (0=Disable, 1=DI, 2=H00)	WORD		0/1/2	num
CnF	H45	32804	38174.3	RW	Pb5 input configuration (0=Disable, 1=DI, 2=H00)	WORD		0/1/2	num
CnF	H46	32805	38174.4	RW	Pb6 input configuration (0=Disable, 1=DI, 2=4-20 mA)	WORD		0/1/2	num
CnF	H47	32806	38174.5	RW	Pb7 input configuration (0=Disable, 1=DI, 2=Ratio)	WORD		0/1/2	num
CnF	H50	32828	38174.6	RW	Configuration of analogue output type	WORD		0/1	flag
CnF	H51	32829	38174.7	RW	Regulator linked to analogue output	WORD		0/1/2	num
CnF	H60	33158	38186.2	RW	Preset selection	WORD		0...8	num
CnF	H68	32830	38175.0	RW	Clock presence	WORD		0/1	flag
CnF	rEL	---	38184.1	RW	Device version	2 BIT		0...3	num
CnF	H70	32808	38175.1	RW	Selection of probe 1 for virtual probe	WORD		0...5	num
CnF	H71	32809	38175.2	RW	Selection of probe 2 for virtual probe	WORD		0...5	num
CnF	H72	32810	38175.3	RW	% calculation virtual probe day	WORD		0...100	%
CnF	H73	32811	38175.4	RW	% calculation virtual probe night	WORD		0...100	%
CnF	H74	33040	38179.7	RW	Sensor 1 selection for virtual filtered sensor	WORD		0...6	num
CnF	H75	33041	38180.0	RW	Thousandth of input signal to the virtual filtered sensor	WORD		1...1000	num
CnF	H76	33042	38180.1	RW	Offset virtual filtered sensor	WORD		-999.9...999.9	num
EE0	Ety	33025	38175.5	RW	Electronic expansion valve driver selection	WORD		0/1	num
EE0	rSP	33280	38186.3	RW	Saturation probe selection	WORD		0...4	num

FOLDER	LABEL	PAR. VALUE ADDR.	VIS PAR. ADDR.	R/W	DESCRIPTION	DATA SIZE	CPL	RANGE	MU
EE0	rSS	33281	38186.4	RW	Overheating probe selection	WORD		0...5	num
EE0	rbu	33282	38186.5	RW	Backup saturation probe selection	WORD		0/1/2	num
EE0	EPd	33284	38186.6	RW	Saturation value display mode	WORD		0/1	flag
EE0	Ert	33285	38186.7	RW	Select type of refrigerant	WORD		0...8	num
EE0	U01	33286	38187.0	RW	PWM period	WORD		3...10	s
EE0	U02	33287	38187.1	RW	Maximum valve opening percentage	WORD		0...100	%
EE0	U05	33290	38187.4	RW	Operating time at max opening for alarm signal	WORD		0...255	min
EE0	U06	33291	38187.5	RW	Minimum valve useful opening percentage	WORD		0...100	%
EE0	U07	33292	38187.6	RW	Maximum valve useful opening percentage	WORD		0...100	%
EE0	U08	33293	38187.7	RW	Valve opening percentage during probe error	WORD		0...100	%
EE0	U13	33296	38188.2	RW	Time interval between to parameters calculation	WORD		0...3600	s
EE0	U14	33297	38188.3	RW	Minimum superheat pass band	WORD		0.0...999.9	°C/°F
EE0	U22	33306	38189.4	RW	Active fixed saturation value in case of probe error	WORD		0/1	flag
EE0	U23	33307	38189.5	RW	Fixed saturation value in case of probe error	WORD	Y	-999.9...999.9	°C/°F
EE0	U25	33310	38190.0	RW	Load selection to deactivate if dead compressor rack	WORD		0...15	num
EE0	U26	33311	38190.1	RW	Saturation temperature threshold to detect dead compressor rack	WORD	Y	-999.9...999.9	°C/°F
EE0	OLt	33302	38189.0	RW	Overheating lower threshold	WORD		2.0...999.9	°C/°F
EE0	A_F	10287	38194.1	RW	Manual or automatic valve drive mode	WORD		0/1	num
EE0	dUt	10288	38194.2	RW	Duty cycle PID in manual mode	WORD		0...100	%
EE0	HOE	33320	38191.2	RW	Enable MOP	WORD		0/1	num
EE0	tAP	33321	38191.3	RW	Min time that temp upper threshold is exceeded for alarm activation	WORD		0...255	min
EE0	Hot	33322	38191.4	RW	Evaporator temperature upper threshold	WORD	Y	-999.9...999.9	°C/°F
EE0	HdP	33323	38191.5	RW	MOP disable time at start-up	WORD		0...999	min
FPr	UL	---	38178.0	RW	Visibility of parameter transfer function (Device -> UNICARD/MFK)	2 BIT		0...3	num
FPr	dL	---	38178.1	RW	Parameter transfer function visibility (UNICARD/MFK -> Device)	2 BIT		0...3	num
FPr	Fr	---	38178.2	RW	Visibility of UNICARD/MFK formatting function	2 BIT		0...3	num
APPLICATION 1 PARAMETERS									
V1	V1-rE	34428	38272.0	RW	Regulation mode	WORD		0...5	num
V1	V1-rP1	34429	38272.1	RW	Control probe 1	WORD		0...8	num
V1	V1-rP2	34430	38272.2	RW	Thermostat 2 regulation probe	WORD		0...8	num
V1	V1-SP1	34431	38272.3	RW	Setpoint	WORD		V1-LS1... V1-HS1	°C/°F
V1	V1-dF1	34432	38272.4	RW	Differential/proportional band	WORD		-58.0...302	°C/°F
V1	V1-SP2	34433	38272.5	RW	Setpoint according to thermostat	WORD		V1-LS2... V1-HS2	°C/°F
V1	V1-dF2	34434	38272.6	RW	Differential according to thermostat	WORD		-58.0...302	°C/°F
V1	V1-Stt	34437	38272.7	RW	Differential control mode	WORD		0/1	flag
V1	V1-HS1	34440	38273.0	RW	Maximum SP1 value	WORD		V1-LS1...V1-HdL	°C/°F
V1	V1-LS1	34441	38273.1	RW	Minimum SP1 value	WORD		V1-LdL...V1-HS1	°C/°F
V1	V1-HS2	34442	38273.2	RW	Maximum SP2 value	WORD		V1-LS2...V1-HdL	°C/°F
V1	V1-LS2	34443	38273.3	RW	Minimum SP2 value	WORD		V1-LdL...V1-HS2	°C/°F
V1	V1-HC1	34438	38273.4	RW	Thermostat mode 1	WORD		0/1	flag
V1	V1-HC2	34439	38273.5	RW	Thermostat mode 2	WORD		0/1	flag
V1	V1-Cit	34448	38273.7	RW	Minimum compressor ON time	WORD		0...250	min
V1	V1-CAt	34449	38274.0	RW	Maximum compressor ON time	WORD		0...250	min
V1	V1-Ont	34454	38274.1	RW	Probe error ON time	WORD		0...250	min
V1	V1-OFt	34455	38274.2	RW	Probe error OFF time	WORD		0...250	min
V1	V1-dOn	34450	38274.3	RW	Delayed start	WORD		0...250	s
V1	V1-dOF	34451	38274.4	RW	Delay after switching off	WORD		0...250	min

FOLDER	LABEL	PAR. VALUE ADDR.	VIS PAR. ADDR.	R/W	DESCRIPTION	DATA SIZE	CPL	RANGE	MU
V1	V1-dbi	34452	38274.5	RW	Time lag between starts	WORD		0...250	min
V1	V1-OdO	34453	38274.6	RW	Output delay from power-on	WORD		0...250	min
V1	V1-OF1	34459	38275.3	RW	Remote offset	WORD		-50.0...50.0	°C/°F
V1	V1-SS1	34566	38306.4	RW	Compressor Softstart: hotgas valve opening advance	WORD		0...250	s
V1	V1-SS2	34567	38306.5	RW	Compressor Softstart: hotgas valve opening delay	WORD		0...250	s
V1	V1-dP1	34460	38275.4	RW	Defrost probe 1 selection	WORD		0...8	num
V1	V1-dP2	34461	38275.5	RW	Defrost probe 2 selection	WORD		0...8	num
V1	V1-dtY	34464	38275.6	RW	Defrost mode	WORD		0...4	num
V1	V1-dFt	34462	38275.7	RW	Defrost activation mode with two probes	WORD		0/1/2	num
V1	V1-dit	34465	38276.0	RW	Interval between defrost cycles	WORD		0...250	hours/ dt1
V1	V1-dt1	34468	38276.1	RW	Unit of measurement for defrost interval	WORD		0/1/2	num
V1	V1-dt2	34469	38276.2	RW	Unit of measurement for defrost duration	WORD		0/1/2	num
V1	V1-dCt	34463	38276.3	RW	Defrost interval count mode	WORD		0...5	num
V1	V1-dOH	34470	38276.4	RW	Defrost interval count mode	WORD		0...250	min
V1	V1-dE1	34466	38276.5	RW	Evaporator 1 defrost timeout	WORD		1...250	min/dt2
V1	V1-dE2	34467	38276.6	RW	Evaporator 2 defrost timeout	WORD		1...250	min/dt2
V1	V1-dS1	34472	38276.7	RW	Probe 1 defrost end temperature	WORD		-58.0...302	°C/°F
V1	V1-dS2	34473	38277.0	RW	Probe 2 defrost end temperature	WORD		-58.0...302	°C/°F
V1	V1-dSS	34471	38277.1	RW	Start defrost temperature threshold	WORD		-58.0...302	°C/°F
V1	V1-dPO	34474	38277.2	RW	Defrost activation request from power-on	WORD		0/1	flag
V1	V1-tcd	34475	38277.3	RW	Minimum compressor ON or OFF time before defrost	WORD		-60...60	min
V1	V1-ndE	34476	38277.4	RW	Minimum defrost time (hot gas only)	WORD		0...250	min
V1	V1-PdC	34477	38277.5	RW	Hot gas extraction time at defrost end	WORD		0...250	min
V1	V1-tPd	34479	38277.6	RW	Pump down time before defrost startup	WORD		0...255	min
V1	V1-dPH	34418	38277.7	RW	Periodic start defrost hour	WORD		0...24	hours
V1	V1-dPn	34419	38278.0	RW	Periodic start defrost minutes	WORD		0...59	min
V1	V1-dPd	34420	38278.1	RW	Regular defrost interval duration	WORD		1...7	day
V1	V1-Fd1	34367	38278.2	RW	Weekend/public holiday 1	WORD		0...7	num
V1	V1-Fd2	34368	38278.3	RW	Weekend/public holiday 2	WORD		0...7	num
V1	V1-Edt	34369	38278.4	RW	Custom duration and temperature for each event	WORD		0/1	flag
V1	V1-d1H	34370	38278.5	RW	Start time hour weekday defrost 1	WORD		0...24	hours
V1	V1-d1n	34371	38278.6	RW	Start time minutes weekday defrost 1	WORD		0...59	min
V1	V1-d1t	34372	38278.7	RW	Weekday defrost 1 duration	WORD		0...250	min
V1	V1-d1S	34373	38279.0	RW	Weekday defrost 1 end temperature	WORD		-58.0...302	°C/°F
V1	V1-d2H	34374	38279.1	RW	Start time hour weekday defrost 2	WORD		V1-d1H...24	hours
V1	V1-d2n	34375	38279.2	RW	Start time minutes weekday defrost 2	WORD		0...59	min
V1	V1-d2t	34376	38279.3	RW	Weekday defrost 2 duration	WORD		0...250	min
V1	V1-d2S	34377	38279.4	RW	Weekday defrost 2 end temperature	WORD		-58.0...302	°C/°F
V1	V1-d3H	34378	38279.5	RW	Start time hour weekday defrost 3	WORD		V1-d2H...24	hours
V1	V1-d3n	34379	38279.6	RW	Start time minutes weekday defrost 3	WORD		0...59	min
V1	V1-d3t	34380	38279.7	RW	Weekday defrost 3 duration	WORD		0...250	min
V1	V1-d3S	34381	38280.0	RW	Weekday defrost 3 end temperature	WORD		-58.0...302	°C/°F
V1	V1-d4H	34382	38280.1	RW	Start time hour weekday defrost 4	WORD		V1-d3H...24	hours
V1	V1-d4n	34383	38280.2	RW	Start time minutes weekday defrost 4	WORD		0...59	min
V1	V1-d4t	34384	38280.3	RW	Weekday defrost 4 duration	WORD		0...250	min
V1	V1-d4S	34385	38280.4	RW	Weekday defrost 4 end temperature	WORD		-58.0...302	°C/°F
V1	V1-d5H	34386	38280.5	RW	Start time hour weekday defrost 5	WORD		V1-d4H...24	hours
V1	V1-d5n	34387	38280.6	RW	Start time minutes weekday defrost 5	WORD		0...59	min
V1	V1-d5t	34388	38280.7	RW	Weekday defrost 5 duration	WORD		0...250	min
V1	V1-d5S	34389	38281.0	RW	Weekday defrost 5 end temperature	WORD		-58.0...302	°C/°F
V1	V1-d6H	34390	38281.1	RW	Start time hour weekday defrost 6	WORD		V1-d5H...24	hours

FOLDER	LABEL	PAR. VALUE ADDR.	VIS PAR. ADDR.	R/W	DESCRIPTION	DATA SIZE	CPL	RANGE	MU
V1	V1-d6n	34391	38281.2	RW	Start time minutes weekday defrost 6	WORD		0...59	min
V1	V1-d6t	34392	38281.3	RW	Weekday defrost 6 duration	WORD		0...250	min
V1	V1-d6S	34393	38281.4	RW	Weekday defrost 6 end temperature	WORD		-58.0...302	°C/°F
V1	V1-F1H	34394	38281.5	RW	Start time hour weekend/public holiday defrost 1	WORD		0...24	hours
V1	V1-F1n	34395	38281.6	RW	Start time minutes weekend/public holiday defrost 1	WORD		0...59	min
V1	V1-F1t	34396	38281.7	RW	Weekend/public holiday defrost 1 duration	WORD		0...250	min
V1	V1-F1S	34397	38282.0	RW	Weekend defrost 1 end temperature	WORD		-58.0...302	°C/°F
V1	V1-F2H	34398	38282.1	RW	Start time hour weekend/public holiday defrost 2	WORD		V1-F1H...24	hours
V1	V1-F2n	34399	38282.2	RW	Start time minutes weekend/public holiday defrost 2	WORD		0...59	min
V1	V1-F2t	34400	38282.3	RW	Weekend/public holiday defrost 2 duration	WORD		0...250	min
V1	V1-F2S	34401	38282.4	RW	Weekend defrost 1 end temperature	WORD		-58.0...302	°C/°F
V1	V1-F3H	34402	38282.5	RW	Start time hour weekend/public holiday defrost 3	WORD		V1-F2H...24	hours
V1	V1-F3n	34403	38282.6	RW	Start time minutes weekend/public holiday defrost 3	WORD		0...59	min
V1	V1-F3t	34404	38282.7	RW	Weekend/public holiday defrost 3 duration	WORD		0...250	min
V1	V1-F3S	34405	38283.0	RW	Weekend defrost 1 end temperature	WORD		-58.0...302	°C/°F
V1	V1-F4H	34406	38283.1	RW	Start time hour weekend/public holiday defrost 4	WORD		V1-F3H...24	hours
V1	V1-F4n	34407	38283.2	RW	Start time minutes weekend/public holiday defrost 4	WORD		0...59	min
V1	V1-F4t	34408	38283.3	RW	Weekend/public holiday defrost 4 duration	WORD		0...250	min
V1	V1-F4S	34409	38283.4	RW	Weekend defrost 1 end temperature	WORD		-58.0...302	°C/°F
V1	V1-F5H	34410	38283.5	RW	Start time hour weekend/public holiday defrost 5	WORD		V1-F4H...24	hours
V1	V1-F5n	34411	38283.6	RW	Start time minutes weekend/public holiday defrost 5	WORD		0...59	min
V1	V1-F5t	34412	38283.7	RW	Weekend/public holiday defrost 5 duration	WORD		0...250	min
V1	V1-F5S	34413	38284.0	RW	Weekend defrost 1 end temperature	WORD		-58.0...302	°C/°F
V1	V1-F6H	34414	38284.1	RW	Start time hour weekend/public holiday defrost 6	WORD		V1-F5H...24	hours
V1	V1-F6n	34415	38284.2	RW	Start time minutes weekend/public holiday defrost 6	WORD		0...59	min
V1	V1-F6t	34416	38284.3	RW	Weekend/public holiday defrost 6 duration	WORD		0...250	min
V1	V1-F6S	34417	38284.4	RW	Weekend defrost 6 end temperature	WORD		-58.0...302	°C/°F
V1	V1-FP1	34480	38284.5	RW	Evaporator fan probe in normal mode	WORD		0...8	num
V1	V1-FP2	34481	38284.6	RW	Evaporator fan probe during defrost	WORD		0...8	num
V1	V1-FPt	34482	38284.7	RW	FSt parameter mode	WORD		0/1	flag
V1	V1-FSt	34483	38285.0	RW	Fans disabling temperature	WORD		-58.0...302	°C/°F
V1	V1-FAd	34484	38285.1	RW	Fans differential	WORD		0.1...25.0	°C/°F
V1	V1-Fdt	34485	38285.2	RW	Fan activation delay from compressor start	WORD		0...250	min
V1	V1-dt	34490	38285.3	RW	Dripping time	WORD		0...250	min
V1	V1-dFd	34488	38285.4	RW	Evaporator fans mode in defrost	WORD		0/1	flag
V1	V1-FCO	34487	38285.5	RW	Evaporator fans mode	WORD		0...3	num
V1	V1-FdC	34486	38285.7	RW	Fan switch-off delay from compressor stoppage	WORD		0...250	min
V1	V1-FOn	34491	38286.0	RW	Fans ON time in duty cycle	WORD		0...250	min
V1	V1-FOF	34492	38286.1	RW	Fans OFF time in duty cycle	WORD		0...250	min
V1	V1-Fnn	34493	38286.2	RW	Duty cycle on time during night mode	WORD		0...250	min
V1	V1-FnF	34494	38286.3	RW	Duty cycle off time during night mode	WORD		0...250	min
V1	V1-rA1	34508	38286.4	RW	Temperature alarm probe 1 selection	WORD		0...7	num
V1	V1-rA2	34509	38286.5	RW	Temperature alarm probe 2 selection	WORD		0...7	num
V1	V1-Att	34510	38286.6	RW	HAL and LAL parameter mode	WORD		0/1	flag
V1	V1-AFd	34511	38286.7	RW	Alarm setpoint differential	WORD		0.1...25.0	°C/°F
V1	V1-HA1	34512	38287.0	RW	Probe 1 maximum alarm	WORD		V1-LA1...302	°C/°F
V1	V1-LA1	34513	38287.1	RW	Probe 1 minimum alarm	WORD		-58.0...V1-HA1	°C/°F
V1	V1-HA2	34514	38287.2	RW	Probe 2 maximum alarm	WORD		V1-LA2...302	°C/°F
V1	V1-LA2	34515	38287.3	RW	Probe 2 minimum alarm	WORD		-58.0...V1-HA2	°C/°F
V1	V1-PAO	34516	38287.4	RW	Alarm exclusion at power-on	WORD		0...10	hours
V1	V1-dAO	34518	38287.5	RW	Alarm exclusion after defrost	WORD		0...250	min
V1	V1-OAO	34517	38287.6	RW	Alarm signalling delay from door closure	WORD		0...10	hours
V1	V1-tdO	34562	38287.7	RW	Open door disabling time	WORD		0...250	num
V1	V1-tA1	34519	38288.0	RW	Alarm LA1 and HA1 signalling delay time	WORD		0...250	min

FOLDER	LABEL	PAR. VALUE ADDR.	VIS PAR. ADDR.	R/W	DESCRIPTION	DATA SIZE	CPL	RANGE	MU
V1	V1-tA2	34520	38288.1	RW	Alarm LA2 and HA2 signalling delay time	WORD		0...250	min
V1	V1-dAt	34478	38288.2	RW	Enable alarm at end of defrost	WORD		0/1	flag
V1	V1-EAL	34522	38288.3	RW	External alarm switches off loads	WORD		0/1/2	num
V1	V1-tP	34563	38288.4	RW	Enable all keys to acknowledge an alarm	WORD		0/1	flag
V1	V1-Art	34507	38288.5	RW	Link supervision alarm activation period	WORD		0...250	min*10
V1	V1-dSd	34504	38288.6	RW	Enable light relay from door switch	WORD		0/1	flag
V1	V1-dLt	34505	38288.7	RW	Light relay deactivation delay	WORD		0...250	min
V1	V1-OFL	34506	38289.0	RW	Light key always disables light relay	WORD		0/1	flag
V1	V1-dOd	34521	38289.1	RW	Door switch switches off loads	WORD		0...3	num
V1	V1-dOA	34523	38289.2	RW	Action forced by digital input	WORD		0...5	num
V1	V1-PEA	34524	38289.3	RW	Select DI for lock/unlock resources function	WORD		0...3	num
V1	V1-dCO	34525	38289.4	RW	Evaporator fan compressor activation/switch-off delay	WORD		0...250	min
V1	V1-dFO	34526	38289.5	RW	Evaporator fan activation/switch-off delay	WORD		0...250	min
V1	V1-ASb	34552	38289.6	RW	AUX/Light active in OFF key/input	WORD		0/1	flag
V1	V1-L00	34304	38289.7	RW	Probe sharing	WORD		0...7	num
V1	V1-L01	34305	38290.0	RW	Displayed value sharing	WORD		0/1/2	num
V1	V1-L02	34306	38290.1	RW	Send Setpoint value when modified	WORD		0/1	flag
V1	V1-L03	34307	38290.2	RW	Send defrost request	WORD		0/1/2	num
V1	V1-L04	34308	38290.3	RW	End defrost mode	WORD		0/1	flag
V1	V1-L05	34309	38290.4	RW	Standby command synchronisation	WORD		0/1	flag
V1	V1-L06	34310	38290.5	RW	Lights command synchronisation	WORD		0/1	flag
V1	V1-L07	34311	38290.6	RW	Reduced setpoint command synchronisation	WORD		0/1	flag
V1	V1-L08	34312	38290.7	RW	AUX command synchronisation	WORD		0/1	flag
V1	V1-L09	34313	38291.0	RW	Share saturation probe (pressure)	WORD		0/1	flag
V1	V1-L10	34564	38291.1	RW	Timeout waiting for end of dependent defrosts	WORD		0...250	min
V1	V1-L11	34314	38308.2	RW	Number of devices connected in Link^2 for alarm	WORD		0...8	min
V1	V1-L12	34315	38308.3	RW	Alarm sharing	WORD		0/1/2	min
V1	V1-dcS	34498	38291.4	RW	Deep Cooling setpoint	WORD		-58.0...302	°C/°F
V1	V1-tdc	34499	38291.5	RW	Deep Cooling Duration	WORD		0...250	min
V1	V1-dcc	34500	38291.6	RW	Wait for defrost cycle start	WORD		0...250	min
V1	V1-ESt	34427	38291.7	RW	Type of Energy Saving	WORD		0...4	num
V1	V1-ESF	34495	38292.0	RW	Night activation mode	WORD		0/1	flag
V1	V1-Cdt	34496	38292.1	RW	Min. door closing time for reduced set activation	WORD		0...255	min*10
V1	V1-ESo	34497	38292.2	RW	Open door cumulative time	WORD		0...10	num
V1	V1-OS1	34444	38292.3	RW	Offset SP1	WORD		-50.0...50.0	°C/°F
V1	V1-OS2	34445	38292.4	RW	Offset SP2	WORD		-50.0...50.0	°C/°F
V1	V1-Od1	34446	38292.5	RW	Offset energy saving door 1	WORD		-50.0...50.0	°C/°F
V1	V1-Od2	34447	38292.6	RW	Offset energy saving door 2	WORD		-50.0...50.0	°C/°F
V1	V1-dn1	34435	38292.7	RW	dn1 Differential in energy saving mode 1	WORD		-58.0...302	°C/°F
V1	V1-dn2	34436	38293.0	RW	dn2 Differential in energy saving mode 2	WORD		-58.0...302	°C/°F
V1	V1-EdH	34421	38293.1	RW	Weekday Energy Saving start hour	WORD		0...24	hours
V1	V1-Edn	34422	38293.2	RW	Weekday Energy Saving start minutes	WORD		0...59	min
V1	V1-Edd	34423	38293.3	RW	Weekday Energy Saving duration	WORD		1...72	hours
V1	V1-EFH	34424	38293.4	RW	Weekend Energy Saving start hour	WORD		0...24	hours
V1	V1-EFn	34425	38293.5	RW	Weekend Energy Saving start minutes	WORD		0...59	min
V1	V1-EFd	34426	38293.6	RW	Weekend Energy Saving duration	WORD		1...72	hours
V1	V1-FH	34527	38293.7	RW	Regulation mode	WORD		0...8	num
V1	V1-FHt	34529	38294.0	RW	Frame Heater period	WORD		1...2500	s*10
V1	V1-FH0	34530	38294.1	RW	Frame Heater setpoint	WORD		-58.0...302	°C/°F
V1	V1-FH1	34531	38294.2	RW	Frame Heater offset	WORD		0.0...25.0	°C/°F
V1	V1-FH2	34532	38294.3	RW	Frame Heater range	WORD		-58.0...302	°C/°F
V1	V1-FH3	34533	38294.4	RW	Min percentage	WORD		0...100	%
V1	V1-FH4	34534	38294.5	RW	Maximum percentage/Duty Cycle Day	WORD		0...100	%
V1	V1-FH5	34535	38294.6	RW	Maximum percentage/Duty Cycle Night (ES)	WORD		0...100	%

FOLDER	LABEL	PAR. VALUE ADDR.	VIS PAR. ADDR.	R/W	DESCRIPTION	DATA SIZE	CPL	RANGE	MU
V1	V1-FH6	34536	38294.7	RW	Percentage during defrost	WORD		0...100	%
V1	V1-LOC	34539	38295.0	RW	Keypad lock	WORD		0/1	flag
V1	V1-PS1	34540	38295.1	RW	Password 1	WORD		0...250	num
V1	V1-PS2	34541	38295.2	RW	Password 2	WORD		0...250	num
V1	V1-ndt	34542	38295.3	RW	Display with decimal point	WORD		0/1	flag
V1	V1-CA1	34348	38295.4	RW	Calibration ST1	WORD		-30.0...30.0	°C/°F
V1	V1-CA2	34349	38295.5	RW	Calibration ST2	WORD		-30.0...30.0	°C/°F
V1	V1-CA3	34350	38295.6	RW	Calibration ST3	WORD		-30.0...30.0	°C/°F
V1	V1-CA4	34351	38295.7	RW	Calibration ST4	WORD		-30.0...30.0	°C/°F
V1	V1-CA5	34352	38296.0	RW	Calibration ST5	WORD		-30.0...30.0	°C/°F
V1	V1-CA6	34353	38296.1	RW	Calibration ST6	WORD		-30.0...30.0	bar/Psi
V1	V1-CA7	34354	38296.2	RW	Calibration ST7	WORD		-30.0...30.0	bar/Psi
V1	V1-LdL	34543	38296.3	RW	Minimum possible value	WORD		-58.0...V1-HdL	°C/°F
V1	V1-HdL	34544	38296.4	RW	Maximum possible value.	WORD		V1-LdL...302	°C/°F
V1	V1-ddL	34545	38296.5	RW	Lock display during defrost	WORD		0/1/2	num
V1	V1-Ldd	34546	38296.6	RW	Unlock timeout “ddL”	WORD		0...250	min
V1	V1-dro	34547	38296.7	RW	°C/°F selection. (0=°C, 1=°F)	WORD		0/1	flag
V1	V1-SbP	34548	38297.0	RW	Bar/Psi selection	WORD		0/1	flag
V1	V1-ddd	34549	38297.1	RW	Main Display	WORD		0...8	num
V1	V1-ddE	34550	38297.2	RW	Fundamental display on ECHO	WORD		0...8	num
V1	V1-rPH	34501	38297.3	RW	HACCP alarm probe selection	WORD		0...5	num
V1	V1-H00	34316	38297.4	RW	Probe type ST1-ST2-ST3-ST4-ST5 (0=NTC, 1=PTC, 2=Pt1000)	WORD		0/1/2	num
V1	V1-H02	34551	38297.5	RW	Key activation time	WORD		0...250	s
V1	V1-H08	34553	38297.6	RW	Stand-by mode	WORD		0/1/2	num
V1	V1-H11	34319	38297.7	RW	DI1 input configuration	WORD		-17...17	num
V1	V1-H12	34320	38298.0	RW	DI2 input configuration	WORD		-17...17	num
V1	V1-H13	34321	38298.1	RW	DI3 input configuration	WORD		-17...17	num
V1	V1-H14	34322	38298.2	RW	DI4 input configuration	WORD		-17...17	num
V1	V1-H15	34323	38298.3	RW	DI5 input configuration	WORD		-17...17	num
V1	V1-H16	34324	38298.4	RW	DI6 input configuration	WORD		-17...17	num
V1	V1-H17	34325	38298.5	RW	DI7 input configuration	WORD		-17...17	num
V1	V1-H18	34326	38298.6	RW	DI8 input configuration	WORD		-17...17	num
V1	V1-dti	34335	38298.7	RW	Unit of measurement for digital input 1 and 2	WORD		0/1	num
V1	V1-d11	34327	38299.0	RW	DI activation signalling delay	WORD		0...255	min/dit
V1	V1-d12	34328	38299.1	RW	DI2 activation signalling delay	WORD		0...255	min/dit
V1	V1-d13	34329	38299.2	RW	DI3 activation signalling delay	WORD		0...255	min
V1	V1-d14	34330	38299.3	RW	DI4 activation signalling delay	WORD		0...255	min
V1	V1-d15	34331	38299.4	RW	DI5 activation signalling delay	WORD		0...255	min
V1	V1-d16	34332	38299.5	RW	DI6 activation signalling delay	WORD		0...255	min
V1	V1-d17	34333	38299.6	RW	DI7 activation signalling delay	WORD		0...255	min
V1	V1-d18	34334	38299.7	RW	DI8 activation signalling delay	WORD		0...255	min
V1	V1-H21	34356	38300.0	RW	Configurability of digital output 1	WORD		0...14	num
V1	V1-H22	34357	38300.1	RW	Configurability of digital output 2	WORD		0...14	num
V1	V1-H23	34358	38300.2	RW	Configurability of digital output 3	WORD		0...14	num
V1	V1-H24	34359	38300.3	RW	Configurability of digital output 4	WORD		0...14	num
V1	V1-H25	34360	38300.4	RW	Configurability of digital output 5	WORD		0...14	num
V1	V1-H27	34362	38300.6	RW	Configurability of digital output 7	WORD		0...14	num
V1	V1-H29	34363	38300.7	RW	Enable buzzer	WORD		0/1	flag
V1	V1-H31	34554	38301.0	RW	Configuration of UP key	WORD		0...9	num
V1	V1-H32	34555	38301.1	RW	Configuration of DOWN key	WORD		0...9	num
V1	V1-H33	34556	38301.2	RW	ESC key configuration	WORD		0...9	num
V1	V1-H34	34557	38301.3	RW	FREE 1 key configuration	WORD		0...9	num
V1	V1-H35	34558	38301.4	RW	FREE 2 key configuration	WORD		0...9	num
V1	V1-H36	34559	38301.5	RW	FREE 3 key configuration	WORD		0...9	num
V1	V1-H37	34560	38301.6	RW	FREE 4 key configuration	WORD		0...9	num

FOLDER	LABEL	PAR. VALUE ADDR.	VIS PAR. ADDR.	R/W	DESCRIPTION	DATA SIZE	CPL	RANGE	MU
V1	V1-H41	34336	38301.7	RW	ST1 input configuration (0=Disable, 1=DI, 2=H00)	WORD		0/1/2	num
V1	V1-H42	34337	38302.0	RW	ST2 input configuration (0=Disable, 1=DI, 2=H00)	WORD		0/1/2	num
V1	V1-H43	34338	38302.1	RW	ST3 input configuration (0=Disable, 1=DI, 2=H00)	WORD		0/1/2	num
V1	V1-H44	34339	38302.2	RW	ST4 input configuration (0=Disable, 1=DI, 2=H00)	WORD		0/1/2	num
V1	V1-H45	34340	38302.3	RW	ST5 input configuration (0=Disable, 1=DI, 2=H00)	WORD		0/1/2	num
V1	V1-H46	34341	38302.4	RW	ST6 input configuration (0=Disable, 1=DI, 2=4-20 mA)	WORD		0/1/2	num
V1	V1-H47	34342	38302.5	RW	ST7 input configuration (0=Disable, 1=DI, 2=Ratio)	WORD		0/1/2	num
V1	V1-H50	34364	38302.6	RW	Configuration of analogue output type	WORD		0/1	flag
V1	V1-H51	34365	38302.7	RW	Regulator linked to analogue output	WORD		0/1/2	num
V1	V1-H68	34366	38303.0	RW	Clock presence	WORD		0/1	flag
V1	V1-H70	34344	38303.1	RW	Selection of probe 1 for virtual probe	WORD		0...5	num
V1	V1-H71	34345	38303.2	RW	Selection of probe 2 for virtual probe	WORD		0...5	num
V1	V1-H72	34346	38303.3	RW	% calculation virtual probe day	WORD		0...100	%
V1	V1-H73	34347	38303.4	RW	% calculation virtual probe night	WORD		0...100	%
V1	V1-H74	34576	38307.7	RW	Sensor 1 selection for virtual filtered sensor	WORD		0...6	num
V1	V1-H75	34577	38308.0	RW	Thousandth of input signal to the virtual filtered sensor	WORD		1...1000	num
V1	V1-H76	34578	38308.1	RW	Offset virtual filtered sensor	WORD		-999.9...999.9	num
V1	V1-Ety	34561	38303,5	RW	Electronic expansion valve driver selection	WORD		0/1	num
V1	V1-UL	---	38306.0	RW	Visibility of parameter transfer function (Device -> UNICARD/MFK)	2 BIT		0...3	num
V1	V1-dL	---	38306.1	RW	Visibility of parameter transfer function (UNICARD/MFK -> Device)	2 BIT		0...3	num
V1	V1-Fr	---	38306.2	RW	UNICARD/MFK formatting function visibility	2 BIT		0...3	num
APPLICATION 2 PARAMETERS									
V2	V2-rE	34812	38368.0	RW	Regulation mode	WORD		0...5	num
V2	V2-rP1	34813	38368.1	RW	Control probe 1	WORD		0...8	num
V2	V2-rP2	34814	38368.2	RW	Thermostat 2 regulation probe	WORD		0...8	num
V2	V2-SP1	34815	38368.3	RW	Setpoint	WORD		V2-LS1...V2-HS1	°C/°F
V2	V2-dF1	34816	38368.4	RW	Differential/proportional band	WORD		-58.0...302	°C/°F
V2	V2-SP2	34817	38368.5	RW	Setpoint according to thermostat	WORD		V2-LS2...V2-HS2	°C/°F
V2	V2-dF2	34818	38368.6	RW	Differential according to thermostat	WORD		-58.0...302	°C/°F
V2	V2-Stt	34821	38368.7	RW	Differential control mode	WORD		0/1	flag
V2	V2-HS1	34824	38369.0	RW	Maximum SP1 value	WORD		V2-LS1...V2-HdL	°C/°F
V2	V2-LS1	34825	38369.1	RW	Minimum SP1 value	WORD		V2-LdL...V2-HS1	°C/°F
V2	V2-HS2	34826	38369.2	RW	Maximum SP2 value	WORD		V2-LS2...V2-HdL	°C/°F
V2	V2-LS2	34827	38369.3	RW	Minimum SP2 value	WORD		V2-LdL...V2-HS2	°C/°F
V2	V2-HC1	34822	38369.4	RW	Thermostat mode 1	WORD		0/1	flag
V2	V2-HC2	34823	38369.5	RW	Thermostat mode 2	WORD		0/1	flag
V2	V2-Cit	34832	38369.7	RW	Minimum compressor ON time	WORD		0...250	min
V2	V2-CAt	34833	38370.0	RW	Maximum compressor ON time	WORD		0...250	min
V2	V2-Ont	34838	38370.1	RW	Probe error ON time	WORD		0...250	min
V2	V2-OFt	34839	38370.2	RW	Probe error OFF time	WORD		0...250	min
V2	V2-dOn	34834	38370.3	RW	Delayed start	WORD		0...250	sec
V2	V2-dOF	34835	38370.4	RW	Delay after switching off	WORD		0...250	min
V2	V2-dbi	34836	38370.5	RW	Time lag between starts	WORD		0...250	min
V2	V2-OdO	34837	38370.6	RW	Output delay from power-on	WORD		0...250	min
V2	V2-OF1	34843	38371.3	RW	Forced remote offset	WORD		-50.0...50.0	°C/°F
V2	V2-SS1	34950	38402.4	RW	Compressor Softstart: hotgas valve opening advance	WORD		0...250	s

FOLDER	LABEL	PAR. VALUE ADDR.	VIS PAR. ADDR.	R/W	DESCRIPTION	DATA SIZE	CPL	RANGE	MU
V2	V2-SS2	34951	38402.5	RW	Compressor Softstart: hotgas valve opening delay	WORD		0...250	s
V2	V2-dP1	34844	38371.4	RW	Defrost probe 1 selection	WORD		0...8	num
V2	V2-dP2	34845	38371.5	RW	Defrost probe 2 selection	WORD		0...8	num
V2	V2-dtY	34848	38371.6	RW	Defrost mode	WORD		0...4	num
V2	V2-dFt	34846	38371.7	RW	Defrost activation mode with two probes	WORD		0/1/2	num
V2	V2-dit	34849	38372.0	RW	Interval between defrost cycles	WORD		0...250	hours/ dt1
V2	V2-dt1	34852	38372.1	RW	Unit of measurement for defrost interval	WORD		0/1/2	num
V2	V2-dt2	34853	38372.2	RW	Unit of measurement for defrost duration	WORD		0/1/2	num
V2	V2-dCt	34847	38372.3	RW	Defrost interval count mode	WORD		0...5	num
V2	V2-dOH	34854	38372.4	RW	Defrost interval count mode	WORD		0...250	min
V2	V2-dE1	34850	38372.5	RW	Evaporator 1 defrost timeout	WORD		1...250	min/dt2
V2	V2-dE2	34851	38372.6	RW	Evaporator 2 defrost timeout	WORD		1...250	min/dt2
V2	V2-dS1	34856	38372.7	RW	Probe 1 defrost end temperature	WORD		-58.0...302	°C/°F
V2	V2-dS2	34857	38373.0	RW	Probe 2 defrost end temperature	WORD		-58.0...302	°C/°F
V2	V2-dSS	34855	38373.1	RW	Start defrost temperature threshold	WORD		-58.0...302	°C/°F
V2	V2-dPO	34858	38373.2	RW	Defrost activation request from power-on	WORD		0/1	flag
V2	V2-tcd	34859	38373.3	RW	Minimum compressor ON or OFF time before defrost	WORD		-60...60	min
V2	V2-ndE	34860	38373.4	RW	Minimum defrost time (hot gas only)	WORD		0...250	min
V2	V2-PdC	34861	38373.5	RW	Hot gas extraction time at defrost end	WORD		0...250	min
V2	V2-tPd	34863	38373.6	RW	Pump down time before defrost startup	WORD		0...255	min
V2	V2-dPH	34802	38373.7	RW	Periodic start defrost hour	WORD		0...24	hours
V2	V2-dPn	34803	38374.0	RW	Periodic start defrost minutes	WORD		0...59	min
V2	V2-dPd	34804	38374.1	RW	Regular defrost interval duration	WORD		1...7	day
V2	V2-Fd1	34751	38374.2	RW	Weekend/public holiday 1	WORD		0...7	num
V2	V2-Fd2	34752	38374.3	RW	Weekend/public holiday 2	WORD		0...7	num
V2	V2-Edt	34753	38374.4	RW	Custom duration and temperature for each event	WORD		0/1	flag
V2	V2-d1H	34754	38374.5	RW	Start time hour weekday defrost 1	WORD		0...24	hours
V2	V2-d1n	34755	38374.6	RW	Start time minutes weekday defrost 1	WORD		0...59	min
V2	V2-d1t	34756	38374.7	RW	Weekday defrost 1 duration	WORD		0...250	min
V2	V2-d1S	34757	38375.0	RW	Weekday defrost 1 end temperature	WORD		-58.0...302	°C/°F
V2	V2-d2H	34758	38375.1	RW	Start time hour weekday defrost 2	WORD		V2-d1H...24	hours
V2	V2-d2n	34759	38375.2	RW	Start time minutes weekday defrost 2	WORD		0...59	min
V2	V2-d2t	34760	38375.3	RW	Weekday defrost 2 duration	WORD		0...250	min
V2	V2-d2S	34761	38375.4	RW	Weekday defrost 2 end temperature	WORD		-58.0...302	°C/°F
V2	V2-d3H	34762	38375.5	RW	Start time hour weekday defrost 3	WORD		V2-d2H...24	hours
V2	V2-d3n	34763	38375.6	RW	Start time minutes weekday defrost 3	WORD		0...59	min
V2	V2-d3t	34764	38375.7	RW	Weekday defrost 3 duration	WORD		0...250	min
V2	V2-d3S	34765	38376.0	RW	Weekday defrost 3 end temperature	WORD		-58.0...302	°C/°F
V2	V2-d4H	34766	38376.1	RW	Start time hour weekday defrost 4	WORD		V2-d3H...24	hours
V2	V2-d4n	34767	38376.2	RW	Start time minutes weekday defrost 4	WORD		0...59	min
V2	V2-d4t	34768	38376.3	RW	Weekday defrost 4 duration	WORD		0...250	min
V2	V2-d4S	34769	38376.4	RW	Weekday defrost 4 end temperature	WORD		-58.0...302	°C/°F
V2	V2-d5H	34770	38376.5	RW	Start time hour weekday defrost 5	WORD		V2-d4H...24	hours
V2	V2-d5n	34771	38376.6	RW	Start time minutes weekday defrost 5	WORD		0...59	min
V2	V2-d5t	34772	38376.7	RW	Weekday defrost 5 duration	WORD		0...250	min
V2	V2-d5S	34773	38377.0	RW	Weekday defrost 5 end temperature	WORD		-58.0...302	°C/°F
V2	V2-d6H	34774	38377.1	RW	Start time hour weekday defrost 6	WORD		V2-d5H...24	hours
V2	V2-d6n	34775	38377.2	RW	Start time minutes weekday defrost 6	WORD		0...59	min
V2	V2-d6t	34776	38377.3	RW	Weekday defrost 6 duration	WORD		0...250	min
V2	V2-d6S	34777	38377.4	RW	Weekday defrost 6 end temperature	WORD		-58.0...302	°C/°F
V2	V2-F1H	34778	38377.5	RW	Start time hour weekend/public holiday defrost 1	WORD		0...24	hours
V2	V2-F1n	34779	38377.6	RW	Start time minutes weekend/public holiday defrost 1	WORD		0...59	min
V2	V2-F1t	34780	38377.7	RW	Weekend/public holiday defrost 1 duration	WORD		0...250	min

FOLDER	LABEL	PAR. VALUE ADDR.	VIS PAR. ADDR.	R/W	DESCRIPTION	DATA SIZE	CPL	RANGE	MU
V2	V2-F1S	34781	38378.0	RW	Weekend defrost 1 end temperature	WORD		-58.0...302	°C/°F
V2	V2-F2H	34782	38378.1	RW	Start time hour weekend/public holiday defrost 2	WORD		V2-F1H...24	hours
V2	V2-F2n	34783	38378.2	RW	Start time minutes weekend/public holiday defrost 2	WORD		0...59	min
V2	V2-F2t	34784	38378.3	RW	Weekend/public holiday defrost 2 duration	WORD		0...250	min
V2	V2-F2S	34785	38378.4	RW	Weekend defrost 1 end temperature	WORD		-58.0...302	°C/°F
V2	V2-F3H	34786	38378.5	RW	Start time hour weekend/public holiday defrost 3	WORD		V2-F2H...24	hours
V2	V2-F3n	34787	38378.6	RW	Start time minutes weekend/public holiday defrost 3	WORD		0...59	min
V2	V2-F3t	34788	38378.7	RW	Weekend/public holiday defrost 3 duration	WORD		0...250	min
V2	V2-F3S	34789	38379.0	RW	Weekend defrost 1 end temperature	WORD		-58.0...302	°C/°F
V2	V2-F4H	34790	38379.1	RW	Start time hour weekend/public holiday defrost 4	WORD		V2-F3H...24	hours
V2	V2-F4n	34791	38379.2	RW	Start time minutes weekend/public holiday defrost 4	WORD		0...59	min
V2	V2-F4t	34792	38379.3	RW	Weekend/public holiday defrost 4 duration	WORD		0...250	min
V2	V2-F4S	34793	38379.4	RW	Weekend defrost 1 end temperature	WORD		-58.0...302	°C/°F
V2	V2-F5H	34794	38379.5	RW	Start time hour weekend/public holiday defrost 5	WORD		V2-F4H...24	hours
V2	V2-F5n	34795	38379.6	RW	Start time minutes weekend/public holiday defrost 5	WORD		0...59	min
V2	V2-F5t	34796	38379.7	RW	Weekend/public holiday defrost 5 duration	WORD		0...250	min
V2	V2-F5S	34797	38380.0	RW	Weekend defrost 1 end temperature	WORD		-58.0...302	°C/°F
V2	V2-F6H	34798	38380.1	RW	Start time hour weekend/public holiday defrost 6	WORD		V2-F5H...24	hours
V2	V2-F6n	34799	38380.2	RW	Start time minutes weekend/public holiday defrost 6	WORD		0...59	min
V2	V2-F6t	34800	38380.3	RW	Weekend/public holiday defrost 6 duration	WORD		0...250	min
V2	V2-F6S	34801	38380.4	RW	Weekend defrost 6 end temperature	WORD		-58.0...302	°C/°F
V2	V2-FP1	34864	38380.5	RW	Evaporator fan probe in normal mode	WORD		0...8	num
V2	V2-FP2	34865	38380.6	RW	Evaporator fan probe during defrost	WORD		0...8	num
V2	V2-FPt	34866	38380.7	RW	FSt parameter mode	WORD		0/1	flag
V2	V2-FSt	34867	38381.0	RW	Fans disabling temperature	WORD		-58.0...302	°C/°F
V2	V2-FAd	34868	38381.1	RW	Fans differential	WORD		0.1...25.0	°C/°F
V2	V2-Fdt	34869	38381.2	RW	Fan activation delay from compressor start	WORD		0...250	min
V2	V2-dt	34874	38381.3	RW	Dripping time	WORD		0...250	min
V2	V2-dFd	34872	38381.4	RW	Evaporator fans mode in defrost	WORD		0/1	flag
V2	V2-FCO	34871	38381.5	RW	Evaporator fans mode	WORD		0...3	num
V2	V2-FdC	34870	38381.7	RW	Fan switch-off delay from compressor stoppage	WORD		0...250	min
V2	V2-FOn	34875	38382.0	RW	Fans ON time in duty cycle	WORD		0...250	min
V2	V2-FOF	34876	38382.1	RW	Fans OFF time in duty cycle	WORD		0...250	min
V2	V2-Fnn	34877	38382.2	RW	Duty cycle on time during night mode	WORD		0...250	min
V2	V2-FnF	34878	38382.3	RW	Duty cycle off time during night mode	WORD		0...250	min
V2	V2-rA1	34892	38382.4	RW	Temperature alarm probe 1 selection	WORD		0...7	num
V2	V2-rA2	34893	38382.5	RW	Temperature alarm probe 2 selection	WORD		0...7	num
V2	V2-Att	34894	38382.6	RW	HAL and LAL parameter mode	WORD		0/1	flag
V2	V2-AFd	34895	38382.7	RW	Alarm setpoint differential	WORD		0.1...25.0	°C/°F
V2	V2-HA1	34896	38383.0	RW	Probe 1 maximum alarm	WORD		V2-LA1...302	°C/°F
V2	V2-LA1	34897	38383.1	RW	Probe 1 minimum alarm	WORD		-58.0...V2-HA1	°C/°F
V2	V2-HA2	34898	38383.2	RW	Probe 2 maximum alarm	WORD		V2-LA2...302	°C/°F
V2	V2-LA2	34899	38383.3	RW	Probe 2 minimum alarm	WORD		-58.0...V2-HA2	°C/°F
V2	V2-PAO	34900	38383.4	RW	Alarm exclusion at power-on	WORD		0...10	hours
V2	V2-dAO	34902	38383.5	RW	Alarm exclusion after defrost	WORD		0...250	min
V2	V2-OAO	34901	38383.6	RW	Alarm signalling delay from door closure	WORD		0...10	hours
V2	V2-tdO	34946	38383.7	RW	Open door disabling time	WORD		0...250	num
V2	V2-tA1	34903	38384.0	RW	Alarm LA1 and HA1 signalling delay time	WORD		0...250	min
V2	V2-tA2	34904	38384.1	RW	Alarm LA2 and HA2 signalling delay time	WORD		0...250	min
V2	V2-dAt	34862	38384.2	RW	Enable alarm at end of defrost	WORD		0/1	flag
V2	V2-EAL	34906	38384.3	RW	External alarm switches off loads	WORD		0...2	num
V2	V2-tP	34947	38384.4	RW	Enable all keys to acknowledge an alarm	WORD		0/1	flag
V2	V2-Art	34891	38384.5	RW	Link supervision alarm activation period	WORD		0...250	min*10
V2	V2-dSd	34888	38384.6	RW	Enable light relay from door switch	WORD		0/1	flag
V2	V2-dLt	34889	38384.7	RW	Light relay deactivation delay	WORD		0...250	min

FOLDER	LABEL	PAR. VALUE ADDR.	VIS PAR. ADDR.	R/W	DESCRIPTION	DATA SIZE	CPL	RANGE	MU
V2	V2-OFL	34890	38385.0	RW	Light key always disables light relay	WORD		0/1	flag
V2	V2-dOd	34905	38385.1	RW	Door switch switches off loads	WORD		0...3	num
V2	V2-dOA	34907	38385.2	RW	Action forced by digital input	WORD		0...5	num
V2	V2-PEA	34908	38385.3	RW	Select DI for lock/unlock resources function	WORD		0...3	num
V2	V2-dCO	34909	38385.4	RW	Evaporator fan compressor activation/switch-off delay	WORD		0...250	min
V2	V2-dFO	34910	38385.5	RW	Evaporator fan activation/switch-off delay	WORD		0...250	min
V2	V2-ASb	34936	38385.6	RW	AUX/Light active in OFF key/input	WORD		0/1	flag
V2	V2-L00	34688	38385.7	RW	Probe sharing	WORD		0...7	num
V2	V2-L01	34689	38386.0	RW	Displayed value sharing	WORD		0/1/2	num
V2	V2-L02	34690	38386.1	RW	Send Setpoint value when modified	WORD		0/1	flag
V2	V2-L03	34691	38386.2	RW	Send defrost request	WORD		0/1/2	num
V2	V2-L04	34692	38386.3	RW	End defrost mode	WORD		0/1	flag
V2	V2-L05	34693	38386.4	RW	Standby command synchronisation	WORD		0/1	flag
V2	V2-L06	34694	38386.5	RW	Lights command synchronisation	WORD		0/1	flag
V2	V2-L07	34695	38386.6	RW	Reduced setpoint command synchronisation	WORD		0/1	flag
V2	V2-L08	34696	38386.7	RW	AUX command synchronisation	WORD		0/1	flag
V2	V2-L09	34697	38387.0	RW	Share saturation probe (pressure)	WORD		0/1	flag
V2	V2-L10	34948	38387.1	RW	Timeout waiting for end of dependent defrosts	WORD		0...250	min
V2	V2-L11	34698	38387.2	RW	Number of devices connected in Link^2 for alarm	WORD		0...8	min
V2	V2-L12	34699	38387.3	RW	Alarm sharing	WORD		0/1/2	min
V2	V2-dcS	34882	38387.4	RW	Deep Cooling setpoint	WORD		-58.0...302	°C/°F
V2	V2-tdc	34883	38387.5	RW	Deep Cooling Duration	WORD		0...250	min
V2	V2-dcc	34884	38387.6	RW	Wait for defrost cycle start	WORD		0...250	min
V2	V2-ESt	34811	38387.7	RW	Type of Energy Saving	WORD		0...4	num
V2	V2-ESF	34879	38388.0	RW	Night activation mode	WORD		0/1	flag
V2	V2-Cdt	34880	38388.1	RW	Min. door closing time for reduced set activation	WORD		0...255	min*10
V2	V2-ESo	34881	38388.2	RW	Open door cumulative time	WORD		0...10	num
V2	V2-OS1	34828	38388.3	RW	Offset SP1	WORD		-50.0...50.0	°C/°F
V2	V2-OS2	34829	38388.4	RW	Offset SP2	WORD		-50.0...50.0	°C/°F
V2	V2-Od1	34830	38388.5	RW	Offset energy saving door 1	WORD		-50.0...50.0	°C/°F
V2	V2-Od2	34831	38388.6	RW	Offset energy saving door 2	WORD		-50.0...50.0	°C/°F
V2	V2-dn1	34819	38388.7	RW	dn1 Differential in energy saving mode 1	WORD		-58.0...302	°C/°F
V2	V2-dn2	34820	38389.0	RW	dn2 Differential in energy saving mode 2	WORD		-58.0...302	°C/°F
V2	V2-EdH	34805	38389.1	RW	Weekday Energy Saving start hour	WORD		0...24	hours
V2	V2-Edn	34806	38389.2	RW	Weekday Energy Saving start minutes	WORD		0...59	min
V2	V2-Edd	34807	38389.3	RW	Weekday Energy Saving duration	WORD		1...72	hours
V2	V2-EFH	34808	38389.4	RW	Weekend Energy Saving start hour	WORD		0...24	hours
V2	V2-EFn	34809	38389.5	RW	Weekend Energy Saving start minutes	WORD		0...59	min
V2	V2-EFd	34810	38389.6	RW	Weekend Energy Saving duration	WORD		1...72	hours
V2	V2-FH	34911	38389.7	RW	Regulation mode	WORD		0...8	num
V2	V2-FHt	34913	38390.0	RW	Frame Heater period	WORD		1...2500	s*10
V2	V2-FH0	34914	38390.1	RW	Frame Heater setpoint	WORD		-58.0...302	°C/°F
V2	V2-FH1	34915	38390.2	RW	Frame Heater offset	WORD		0.0...25.0	°C/°F
V2	V2-FH2	34916	38390.3	RW	Frame Heater range	WORD		-58.0...302	°C/°F
V2	V2-FH3	34917	38390.4	RW	Min percentage	WORD		0...100	%
V2	V2-FH4	34918	38390.5	RW	Maximum percentage/Duty Cycle Day	WORD		0...100	%
V2	V2-FH5	34919	38390.6	RW	Maximum percentage/Duty Cycle Night (ES)	WORD		0...100	%
V2	V2-FH6	34920	38390.7	RW	Percentage during defrost	WORD		0...100	%
V2	V2-LOC	34923	38391.0	RW	Keypad lock	WORD		0/1	flag
V2	V2-PS1	34924	38391.1	RW	Password 1	WORD		0...250	num
V2	V2-PS2	34925	38391.2	RW	Password 2	WORD		0...250	num
V2	V2-ndt	34926	38391.3	RW	Display with decimal point	WORD		0/1	flag
V2	V2-CA1	34732	38391.4	RW	Calibration Pb1	WORD		-30.0...30.0	°C/°F
V2	V2-CA2	34733	38391.5	RW	Calibration Pb2	WORD		-30.0...30.0	°C/°F
V2	V2-CA3	34734	38391.6	RW	Calibration Pb3	WORD		-30.0...30.0	°C/°F

FOLDER	LABEL	PAR. VALUE ADDR.	VIS PAR. ADDR.	R/W	DESCRIPTION	DATA SIZE	CPL	RANGE	MU
V2	V2-CA4	34735	38391.7	RW	Calibration Pb4	WORD		-30.0...30.0	°C/°F
V2	V2-CA5	34736	38392.0	RW	Calibration Pb5	WORD		-30.0...30.0	°C/°F
V2	V2-CA6	34737	38392.1	RW	Calibration Pb6	WORD		-30.0...30.0	bar/Psi
V2	V2-CA7	34738	38392.2	RW	Calibration Pb7	WORD		-30.0...30.0	bar/Psi
V2	V2-LdL	34927	38392.3	RW	Minimum possible value	WORD		-58.0...V2-HdL	°C/°F
V2	V2-HdL	34928	38392.4	RW	Maximum possible value.	WORD		V2-LdL...302	°C/°F
V2	V2-ddL	34929	38392.5	RW	Lock display during defrost	WORD		0/1/2	num
V2	V2-Ldd	34930	38392.6	RW	Unlock timeout “ddL”	WORD		0...250	min
V2	V2-dro	34931	38392.7	RW	°C/°F selection. (0=°C, 1=°F)	WORD		0/1	flag
V2	V2-SbP	34932	38393.0	RW	Bar/Psi selection	WORD		0/1	flag
V2	V2-ddd	34933	38393.1	RW	Main Display	WORD		0...8	num
V2	V2-ddE	34934	38393.2	RW	Fundamental display on ECHO	WORD		0...8	num
V2	V2-rPH	34885	38393.3	RW	HACCP alarm probe selection	WORD		0...5	num
V2	V2-H00	34700	38393.4	RW	Type of Pb1-Pb2-Pb3-Pb4-Pb5 probes (0=NTC, 1=PTC, 2=Pt1000)	WORD		0/1/2	num
V2	V2-H02	34935	38393.5	RW	Key activation time	WORD		0...250	s
V2	V2-H08	34937	38393.6	RW	Stand-by mode	WORD		0/1/2	num
V2	V2-H11	34703	38393.7	RW	DI1 input configuration	WORD		-17...17	num
V2	V2-H12	34704	38394.0	RW	DI2 input configuration	WORD		-17...17	num
V2	V2-H13	34705	38394.1	RW	DI3 input configuration	WORD		-17...17	num
V2	V2-H14	34706	38394.2	RW	DI4 input configuration	WORD		-17...17	num
V2	V2-H15	34707	38394.3	RW	DI5 input configuration	WORD		-17...17	num
V2	V2-H16	34708	38394.4	RW	DI6 input configuration	WORD		-17...17	num
V2	V2-H17	34709	38394.5	RW	DI7 input configuration	WORD		-17...17	num
V2	V2-H18	34710	38394.6	RW	DI8 input configuration	WORD		-17...17	num
V2	V2-dti	34719	38394.7	RW	Unit of measurement for digital input 1 and 2	WORD		0/1	num
V2	V2-d11	34711	38395.0	RW	DI activation signalling delay	WORD		0...255	min/dti
V2	V2-d12	34712	38395.1	RW	DI2 activation signalling delay	WORD		0...255	min/dti
V2	V2-d13	34713	38395.2	RW	DI3 activation signalling delay	WORD		0...255	min
V2	V2-d14	34714	38395.3	RW	DI4 activation signalling delay	WORD		0...255	min
V2	V2-d15	34715	38395.4	RW	DI5 activation signalling delay	WORD		0...255	min
V2	V2-d16	34716	38395.5	RW	DI6 activation signalling delay	WORD		0...255	min
V2	V2-d17	34717	38395.6	RW	DI7 activation signalling delay	WORD		0...255	min
V2	V2-d18	34718	38395.7	RW	DI8 activation signalling delay	WORD		0...255	min
V2	V2-H21	34740	38396.0	RW	Configurability of digital output 1	WORD		0...14	num
V2	V2-H22	34741	38396.1	RW	Configurability of digital output 2	WORD		0...14	num
V2	V2-H23	34742	38396.2	RW	Configurability of digital output 3	WORD		0...14	num
V2	V2-H24	34743	38396.3	RW	Configurability of digital output 4	WORD		0...14	num
V2	V2-H25	34744	38396.4	RW	Configurability of digital output 5	WORD		0...14	num
V2	V2-H27	34745	38396.6	RW	Configurability of digital output 7	WORD		0...14	num
V2	V2-H29	34747	38396.7	RW	Enable buzzer	WORD		0/1	flag
V2	V2-H31	34938	38397.0	RW	Configuration of UP key	WORD		0...9	num
V2	V2-H32	34939	38397.1	RW	Configuration of DOWN key	WORD		0...9	num
V2	V2-H33	34940	38397.2	RW	ESC key configuration	WORD		0...9	num
V2	V2-H34	34941	38397.3	RW	FREE 1 key configuration	WORD		0...9	num
V2	V2-H35	34942	38397.4	RW	FREE 2 key configuration	WORD		0...9	num
V2	V2-H36	34943	38397.5	RW	FREE 3 key configuration	WORD		0...9	num
V2	V2-H37	34944	38397.6	RW	FREE 4 key configuration	WORD		0...9	num
V2	V2-H41	34720	38397.7	RW	Pb1 input configuration (0=Disable, 1=DI, 2=H00)	WORD		0/1/2	num
V2	V2-H42	34721	38398.0	RW	Pb2 input configuration (0=Disable, 1=DI, 2=H00)	WORD		0/1/2	num
V2	V2-H43	34722	38398.1	RW	Pb3 input configuration (0=Disable, 1=DI, 2=H00)	WORD		0/1/2	num
V2	V2-H44	34723	38398.2	RW	Pb4 input configuration (0=Disable, 1=DI, 2=H00)	WORD		0/1/2	num

FOLDER	LABEL	PAR. VALUE ADDR.	VIS PAR. ADDR.	R/W	DESCRIPTION	DATA SIZE	CPL	RANGE	MU
V2	V2-H45	34724	38398.3	RW	Pb5 input configuration (0=Disable, 1=DI, 2=H00)	WORD		0/1/2	num
V2	V2-H46	34725	38398.4	RW	Pb6 input configuration (0=Disable, 1=DI, 2=4-20 mA)	WORD		0/1/2	num
V2	V2-H47	34726	38398.5	RW	Pb7 input configuration (0=Disable, 1=DI, 2=Ratio)	WORD		0/1/2	num
V2	V2-H50	34748	38398.6	RW	Configuration of analogue output type	WORD		0/1	flag
V2	V2-H51	34749	38398.7	RW	Regulator linked to analogue output	WORD		0/1/2	num
V2	V2-H68	34750	38399.0	RW	Clock presence	WORD		0/1	flag
V2	V2-H70	34728	38399.1	RW	Selection of probe 1 for virtual probe	WORD		0...5	num
V2	V2-H71	34729	38399.2	RW	Selection of probe 2 for virtual probe	WORD		0...5	num
V2	V2-H72	34730	38399.3	RW	% calculation virtual probe day	WORD		0...100	%
V2	V2-H73	34731	38399.4	RW	% calculation virtual probe night	WORD		0...100	%
V2	V2-H74	34960	38403.7	RW	Sensor 1 selection for virtual filtered sensor	WORD		0...6	num
V2	V2-H75	34961	38404.0	RW	Thousandth of input signal to the virtual filtered sensor	WORD		1...1000	num
V2	V2-H76	34962	38404.1	RW	Offset virtual filtered sensor	WORD		-999.9...999.9	num
V2	V2-Ety	34945	38399,5	RW	Electronic expansion valve driver selection	WORD		0/1	num
V2	V2-UL	---	38402.0	RW	Visibility of parameter transfer function (Device -> UNICARD/MFK)	2 BIT		0...3	num
V2	V2-dL	---	38402.1	RW	Visibility of parameter transfer function (UNICARD/MFK -> Device)	2 BIT		0...3	num
V2	V2-Fr	---	38402.2	RW	UNICARD/MFK formatting function visibility	2 BIT		0...3	num
APPLICATION 3 PARAMETERS									
V3	V3-rE	35196	38464.0	RW	Regulation mode	WORD		0...5	num
V3	V3-rP1	35197	38464.1	RW	Control probe 1	WORD		0...8	num
V3	V3-rP2	35198	38464.2	RW	Thermostat 2 regulation probe	WORD		0...8	num
V3	V3-SP1	35199	38464.3	RW	Setpoint	WORD		V3-LS1...V3-HS1	°C/°F
V3	V3-dF1	35200	38464.4	RW	Differential/proportional band	WORD		-58.0...302	°C/°F
V3	V3-SP2	35201	38464.5	RW	Setpoint according to thermostat	WORD		V3-LS2...V3-HS2	°C/°F
V3	V3-dF2	35202	38464.6	RW	Differential according to thermostat	WORD		-58.0...302	°C/°F
V3	V3-Stt	35205	38464.7	RW	Differential control mode	WORD		0/1	flag
V3	V3-HS1	35208	38465.0	RW	Maximum SP1 value	WORD		V3-LS1...V3-HdL	°C/°F
V3	V3-LS1	35209	38465.1	RW	Minimum SP1 value	WORD		V3-LdL...V3-HS1	°C/°F
V3	V3-HS2	35210	38465.2	RW	Maximum SP2 value	WORD		V3-LS2...V3-HdL	°C/°F
V3	V3-LS2	35211	38465.3	RW	Minimum SP2 value	WORD		V3-LdL...V3-HS2	°C/°F
V3	V3-HC1	35206	38465.4	RW	Thermostat mode 1	WORD		0/1	flag
V3	V3-HC2	35207	38465.5	RW	Thermostat mode 2	WORD		0/1	flag
V3	V3-Cit	35216	38465.7	RW	Minimum compressor ON time	WORD		0...250	min
V3	V3-CAt	35217	38466.0	RW	Maximum compressor ON time	WORD		0...250	min
V3	V3-Ont	35222	38466.1	RW	Probe error ON time	WORD		0...250	min
V3	V3-OFt	35223	38466.2	RW	Probe error OFF time	WORD		0...250	min
V3	V3-dOn	35218	38466.3	RW	Delayed start	WORD		0...250	s
V3	V3-dOF	35219	38466.4	RW	Delay after switching off	WORD		0...250	min
V3	V3-dbi	35220	38466.5	RW	Time lag between starts	WORD		0...250	min
V3	V3-OdO	35221	38466.6	RW	Output delay from power-on	WORD		0...250	min
V3	V3-OF1	35227	38467.3	RW	Forced remote offset	WORD		-50.0...50.0	°C/°F
V3	V3-SS1	35334	38498.4	RW	Compressor Softstart: hotgas valve opening advance	WORD		0...250	s
V3	V3-SS2	35335	38498.5	RW	Compressor Softstart: hotgas valve opening delay	WORD		0...250	s
V3	V3-dP1	35228	38467.4	RW	Defrost probe 1 selection	WORD		0...8	num
V3	V3-dP2	35229	38467.5	RW	Defrost probe 2 selection	WORD		0...8	num
V3	V3-dtY	35232	38467.6	RW	Defrost mode	WORD		0...4	num
V3	V3-dFt	35230	38467.7	RW	Defrost activation mode with two probes	WORD		0/1/2	num
V3	V3-dit	35233	38468.0	RW	Interval between defrost cycles	WORD		0...250	hours/ dt1

FOLDER	LABEL	PAR. VALUE ADDR.	VIS PAR. ADDR.	R/W	DESCRIPTION	DATA SIZE	CPL	RANGE	MU
V3	V3-dt1	35236	38468.1	RW	Unit of measurement for defrost interval	WORD		0/1/2	num
V3	V3-dt2	35237	38468.2	RW	Unit of measurement for defrost duration	WORD		0/1/2	num
V3	V3-dCt	35231	38468.3	RW	Defrost interval count mode	WORD		0...5	num
V3	V3-dOH	35238	38468.4	RW	Defrost interval count mode	WORD		0...250	min
V3	V3-dE1	35234	38468.5	RW	Evaporator 1 defrost timeout	WORD		1...250	min/dt2
V3	V3-dE2	35235	38468.6	RW	Evaporator 2 defrost timeout	WORD		1...250	min/dt2
V3	V3-dS1	35240	38468.7	RW	Probe 1 defrost end temperature	WORD		-58.0...302	°C/°F
V3	V3-dS2	35241	38469.0	RW	Probe 2 defrost end temperature	WORD		-58.0...302	°C/°F
V3	V3-dSS	35239	38469.1	RW	Start defrost temperature threshold	WORD		-58.0...302	°C/°F
V3	V3-dPO	35242	38469.2	RW	Defrost activation request from power-on	WORD		0/1	flag
V3	V3-tcd	35243	38469.3	RW	Minimum compressor ON or OFF time before defrost	WORD		-60...60	min
V3	V3-ndE	35244	38469.4	RW	Minimum defrost time (hot gas only)	WORD		0...250	min
V3	V3-PdC	35245	38469.5	RW	Hot gas extraction time at defrost end	WORD		0...250	min
V3	V3-tPd	35247	38469.6	RW	Pump down time before defrost startup	WORD		0...255	min
V3	V3-dPH	35186	38469.7	RW	Periodic start defrost hour	WORD		0...24	hours
V3	V3-dPn	35187	38470.0	RW	Periodic start defrost minutes	WORD		0...59	min
V3	V3-dPd	35188	38470.1	RW	Regular defrost interval duration	WORD		1...7	day
V3	V3-Fd1	35135	38470.2	RW	Weekend/public holiday 1	WORD		0...7	num
V3	V3-Fd2	35136	38470.3	RW	Weekend/public holiday 2	WORD		0...7	num
V3	V3-Edt	35137	38470.4	RW	Custom duration and temperature for each event	WORD		0/1	flag
V3	V3-d1H	35138	38470.5	RW	Start time hour weekday defrost 1	WORD		0...24	hours
V3	V3-d1n	35139	38470.6	RW	Start time minutes weekday defrost 1	WORD		0...59	min
V3	V3-d1t	35140	38470.7	RW	Weekday defrost 1 duration	WORD		0...250	min
V3	V3-d1S	35141	38471.0	RW	Weekday defrost 1 end temperature	WORD		-58.0...302	°C/°F
V3	V3-d2H	35142	38471.1	RW	Start time hour weekday defrost 2	WORD		V3-d1H...24	hours
V3	V3-d2n	35143	38471.2	RW	Start time minutes weekday defrost 2	WORD		0...59	min
V3	V3-d2t	35144	38471.3	RW	Weekday defrost 2 duration	WORD		0...250	min
V3	V3-d2S	35145	38471.4	RW	Weekday defrost 2 end temperature	WORD		-58.0...302	°C/°F
V3	V3-d3H	35146	38471.5	RW	Start time hour weekday defrost 3	WORD		V3-d2H...24	hours
V3	V3-d3n	35147	38471.6	RW	Start time minutes weekday defrost 3	WORD		0...59	min
V3	V3-d3t	35148	38471.7	RW	Weekday defrost 3 duration	WORD		0...250	min
V3	V3-d3S	35149	38472.0	RW	Weekday defrost 3 end temperature	WORD		-58.0...302	°C/°F
V3	V3-d4H	35150	38472.1	RW	Start time hour weekday defrost 4	WORD		V3-d3H...24	hours
V3	V3-d4n	35151	38472.2	RW	Start time minutes weekday defrost 4	WORD		0...59	min
V3	V3-d4t	35152	38472.3	RW	Weekday defrost 4 duration	WORD		0...250	min
V3	V3-d4S	35153	38472.4	RW	Weekday defrost 4 end temperature	WORD		-58.0...302	°C/°F
V3	V3-d5H	35154	38472.5	RW	Start time hour weekday defrost 5	WORD		V3-d4H...24	hours
V3	V3-d5n	35155	38472.6	RW	Start time minutes weekday defrost 5	WORD		0...59	min
V3	V3-d5t	35156	38472.7	RW	Weekday defrost 5 duration	WORD		0...250	min
V3	V3-d5S	35157	38473.0	RW	Weekday defrost 5 end temperature	WORD		-58.0...302	°C/°F
V3	V3-d6H	35158	38473.1	RW	Start time hour weekday defrost 6	WORD		V3-d5H...24	hours
V3	V3-d6n	35159	38473.2	RW	Start time minutes weekday defrost 6	WORD		0...59	min
V3	V3-d6t	35160	38473.3	RW	Weekday defrost 6 duration	WORD		0...250	min
V3	V3-d6S	35161	38473.4	RW	Weekday defrost 6 end temperature	WORD		-58.0...302	°C/°F
V3	V3-F1H	35162	38473.5	RW	Start time hour weekend/public holiday defrost 1	WORD		0...24	hours
V3	V3-F1n	35163	38473.6	RW	Start time minutes weekend/public holiday defrost 1	WORD		0...59	min
V3	V3-F1t	35164	38473.7	RW	Weekend/public holiday defrost 1 duration	WORD		0...250	min
V3	V3-F1S	35165	38474.0	RW	Weekend defrost 1 end temperature	WORD		-58.0...302	°C/°F
V3	V3-F2H	35166	38474.1	RW	Start time hour weekend/public holiday defrost 2	WORD		V3-F1H...24	hours
V3	V3-F2n	35167	38474.2	RW	Start time minutes weekend/public holiday defrost 2	WORD		0...59	min
V3	V3-F2t	35168	38474.3	RW	Weekend/public holiday defrost 2 duration	WORD		0...250	min
V3	V3-F2S	35169	38474.4	RW	Weekend defrost 1 end temperature	WORD		-58.0...302	°C/°F
V3	V3-F3H	35170	38474.5	RW	Start time hour weekend/public holiday defrost 3	WORD		V3-F2H...24	hours
V3	V3-F3n	35171	38474.6	RW	Start time minutes weekend/public holiday defrost 3	WORD		0...59	min
V3	V3-F3t	35172	38474.7	RW	Weekend/public holiday defrost 3 duration	WORD		0...250	min

FOLDER	LABEL	PAR. VALUE ADDR.	VIS PAR. ADDR.	R/W	DESCRIPTION	DATA SIZE	CPL	RANGE	MU
V3	V3-F3S	35173	38475.0	RW	Weekend defrost 1 end temperature	WORD		-58.0...302	°C/°F
V3	V3-F4H	35174	38475.1	RW	Start time hour weekend/public holiday defrost 4	WORD		V3-F3H...24	hours
V3	V3-F4n	35175	38475.2	RW	Start time minutes weekend/public holiday defrost 4	WORD		0...59	min
V3	V3-F4t	35176	38475.3	RW	Weekend/public holiday defrost 4 duration	WORD		0...250	min
V3	V3-F4S	35177	38475.4	RW	Weekend defrost 1 end temperature	WORD		-58.0...302	°C/°F
V3	V3-F5H	35178	38475.5	RW	Start time hour weekend/public holiday defrost 5	WORD		V3-F4H...24	hours
V3	V3-F5n	35179	38475.6	RW	Start time minutes weekend/public holiday defrost 5	WORD		0...59	min
V3	V3-F5t	35180	38475.7	RW	Weekend/public holiday defrost 5 duration	WORD		0...250	min
V3	V3-F5S	35181	38476.0	RW	Weekend defrost 1 end temperature	WORD		-58.0...302	°C/°F
V3	V3-F6H	35182	38476.1	RW	Start time hour weekend/public holiday defrost 6	WORD		V3-F5H...24	hours
V3	V3-F6n	35183	38476.2	RW	Start time minutes weekend/public holiday defrost 6	WORD		0...59	min
V3	V3-F6t	35184	38476.3	RW	Weekend/public holiday defrost 6 duration	WORD		0...250	min
V3	V3-F6S	35185	38476.4	RW	Weekend defrost 6 end temperature	WORD		-58.0...302	°C/°F
V3	V3-FP1	35248	38476.5	RW	Evaporator fan probe in normal mode	WORD		0...8	num
V3	V3-FP2	35249	38476.6	RW	Evaporator fan probe during defrost	WORD		0...8	num
V3	V3-FPt	35250	38476.7	RW	FSt parameter mode	WORD		0/1	flag
V3	V3-FSt	35251	38477.0	RW	Fans disabling temperature	WORD		-58.0...302	°C/°F
V3	V3-FAd	35252	38477.1	RW	Fans differential	WORD		0.1...25.0	°C/°F
V3	V3-Fdt	35253	38477.2	RW	Fan activation delay from compressor start	WORD		0...250	min
V3	V3-dt	35258	38477.3	RW	Dripping time	WORD		0...250	min
V3	V3-dFd	35256	38477.4	RW	Evaporator fans mode in defrost	WORD		0/1	flag
V3	V3-FCO	35255	38477.5	RW	Evaporator fans mode	WORD		0...3	num
V3	V3-FdC	35254	38477.7	RW	Fan switch-off delay from compressor stoppage	WORD		0...250	min
V3	V3-FOn	35259	38478.0	RW	Fans ON time in duty cycle	WORD		0...250	min
V3	V3-FOF	35260	38478.1	RW	Fans OFF time in duty cycle	WORD		0...250	min
V3	V3-Fnn	35261	38478.2	RW	Duty cycle on time during night mode	WORD		0...250	min
V3	V3-FnF	35262	38478.3	RW	Duty cycle off time during night mode	WORD		0...250	min
V3	V3-rA1	35276	38478.4	RW	Temperature alarm probe 1 selection	WORD		0...7	num
V3	V3-rA2	35277	38478.5	RW	Temperature alarm probe 2 selection	WORD		0...7	num
V3	V3-Att	35278	38478.6	RW	HAL and LAL parameter mode	WORD		0/1	flag
V3	V3-AFd	35279	38478.7	RW	Alarm setpoint differential	WORD		0.1...25.0	°C/°F
V3	V3-HA1	35280	38479.0	RW	Probe 1 maximum alarm	WORD		V3-LA1...302	°C/°F
V3	V3-LA1	35281	38479.1	RW	Probe 1 minimum alarm	WORD		-58.0...V3-HA1	°C/°F
V3	V3-HA2	35282	38479.2	RW	Probe 2 maximum alarm	WORD		V3-LA2...302	°C/°F
V3	V3-LA2	35283	38479.3	RW	Probe 2 minimum alarm	WORD		-58.0...V3-HA2	°C/°F
V3	V3-PAO	35284	38479.4	RW	Alarm exclusion at power-on	WORD		0...10	hours
V3	V3-dAO	35286	38479.5	RW	Alarm exclusion after defrost	WORD		0...250	min
V3	V3-OAO	35285	38479.6	RW	Alarm signalling delay from door closure	WORD		0...10	hours
V3	V3-tdO	35330	38479.7	RW	Open door disabling time	WORD		0...250	num
V3	V3-tA1	35287	38480.0	RW	Alarm LA1 and HA1 signalling delay time	WORD		0...250	min
V3	V3-tA2	35288	38480.1	RW	Alarm LA2 and HA2 signalling delay time	WORD		0...250	min
V3	V3-dAt	35246	38480.2	RW	Enable alarm at end of defrost	WORD		0/1	flag
V3	V3-EAL	35290	38480.3	RW	External alarm switches off loads	WORD		0/1/2	num
V3	V3-tP	35331	38480.4	RW	Enable all keys to acknowledge an alarm	WORD		0/1	num
V3	V3-Art	35275	38480.5	RW	Link supervision alarm activation period	WORD		0...250	min*10
V3	V3-dSd	35272	38480.6	RW	Enable light relay from door switch	WORD		0/1	flag
V3	V3-dLt	35273	38480.7	RW	Light relay deactivation delay	WORD		0...250	min
V3	V3-OFL	35274	38481.0	RW	Light key always disables light relay	WORD		0/1	flag
V3	V3-dOd	35289	38481.1	RW	Door switch switches off loads	WORD		0...3	num
V3	V3-dOA	35291	38481.2	RW	Action forced by digital input	WORD		0...5	num
V3	V3-PEA	35292	38481.3	RW	Select DI for lock/unlock resources function	WORD		0...3	num
V3	V3-dCO	35293	38481.4	RW	Evaporator fan compressor activation/switch-off delay	WORD		0...250	min
V3	V3-dFO	35294	38481.5	RW	Evaporator fan activation/switch-off delay	WORD		0...250	min
V3	V3-ASb	35320	38481.6	RW	AUX/Light active in OFF key/input	WORD		0/1	flag
V3	V3-L00	35072	38481.7	RW	Probe sharing	WORD		0...7	num

FOLDER	LABEL	PAR. VALUE ADDR.	VIS PAR. ADDR.	R/W	DESCRIPTION	DATA SIZE	CPL	RANGE	MU
V3	V3-L01	35073	38482.0	RW	Displayed value sharing	WORD		0/1/2	num
V3	V3-L02	35074	38482.1	RW	Send Setpoint value when modified	WORD		0/1	flag
V3	V3-L03	35075	38482.2	RW	Send defrost request	WORD		0/1/2	num
V3	V3-L04	35076	38482.3	RW	End defrost mode	WORD		0/1	flag
V3	V3-L05	35077	38482.4	RW	Standby command synchronisation	WORD		0/1	flag
V3	V3-L06	35078	38482.5	RW	Lights command synchronisation	WORD		0/1	flag
V3	V3-L07	35079	38482.6	RW	Reduced setpoint command synchronisation	WORD		0/1	flag
V3	V3-L08	35080	38482.7	RW	AUX command synchronisation	WORD		0/1	flag
V3	V3-L09	35081	38483.0	RW	Share saturation probe (pressure)	WORD		0/1	flag
V3	V3-L10	35332	38483.1	RW	Timeout waiting for end of dependent defrosts	WORD		0...250	min
V3	V3-L11	35082	38500.2	RW	Number of devices connected in Link² for alarm	WORD		0...8	min
V3	V3-L12	35083	38500.3	RW	Alarm sharing	WORD		0/1/2	min
V3	V3-dcS	35266	38483.4	RW	Deep Cooling setpoint	WORD		-58.0...302	°C/°F
V3	V3-tdc	35267	38483.5	RW	Deep Cooling Duration	WORD		0...250	min
V3	V3-dcc	35268	38483.6	RW	Wait for defrost cycle start	WORD		0...250	min
V3	V3-ESt	35195	38483.7	RW	Type of Energy Saving	WORD		0...4	num
V3	V3-ESF	35263	38484.0	RW	Night activation mode	WORD		0/1	flag
V3	V3-Cdt	35264	38484.1	RW	Min. door closing time for reduced set activation	WORD		0...255	min*10
V3	V3-ESo	35265	38484.2	RW	Open door cumulative time	WORD		0...10	num
V3	V3-OS1	35212	38484.3	RW	Offset SP1	WORD		-50.0...50.0	°C/°F
V3	V3-OS2	35213	38484.4	RW	Offset SP2	WORD		-50.0...50.0	°C/°F
V3	V3-Od1	35214	38484.5	RW	Offset energy saving door 1	WORD		-50.0...50.0	°C/°F
V3	V3-Od2	35215	38484.6	RW	Offset energy saving door 2	WORD		-50.0...50.0	°C/°F
V3	V3-dn1	35203	38484.7	RW	dn1 Differential in energy saving mode 1	WORD		-58.0...302	°C/°F
V3	V3-dn2	35204	38485.0	RW	dn2 Differential in energy saving mode 2	WORD		-58.0...302	°C/°F
V3	V3-EdH	35189	38485.1	RW	Weekday Energy Saving start hour	WORD		0...24	hours
V3	V3-Edn	35190	38485.2	RW	Weekday Energy Saving start minutes	WORD		0...59	min
V3	V3-Edd	35191	38485.3	RW	Weekday Energy Saving duration	WORD		1...72	hours
V3	V3-EFH	35192	38485.4	RW	Weekend Energy Saving start hour	WORD		0...24	hours
V3	V3-EFn	35193	38485.5	RW	Weekend Energy Saving start minutes	WORD		0...59	min
V3	V3-EFd	35194	38485.6	RW	Weekend Energy Saving duration	WORD		1...72	hours
V3	V3-FH	35295	38485.7	RW	Regulation mode	WORD		0...8	num
V3	V3-FHt	35297	38486.0	RW	Frame Heater period	WORD		1...2500	s*10
V3	V3-FH0	35298	38486.1	RW	Frame Heater setpoint	WORD		-58.0...302	°C/°F
V3	V3-FH1	35299	38486.2	RW	Frame Heater offset	WORD		0.0...25.0	°C/°F
V3	V3-FH2	35300	38486.3	RW	Frame Heater range	WORD		-58.0...302	°C/°F
V3	V3-FH3	35301	38486.4	RW	Min percentage	WORD		0...100	%
V3	V3-FH4	35302	38486.5	RW	Maximum percentage/Duty Cycle Day	WORD		0...100	%
V3	V3-FH5	35303	38486.6	RW	Maximum percentage/Duty Cycle Night (ES)	WORD		0...100	%
V3	V3-FH6	35304	38486.7	RW	Percentage during defrost	WORD		0...100	%
V3	V3-LOC	35307	38487.0	RW	Keypad lock	WORD		0/1	flag
V3	V3-PS1	35308	38487.1	RW	Password 1	WORD		0...250	num
V3	V3-PS2	35309	38487.2	RW	Password 2	WORD		0...250	num
V3	V3-ndt	35310	38487.3	RW	Display with decimal point	WORD		0/1	flag
V3	V3-CA1	35116	38487.4	RW	Calibration Pb1	WORD		-30.0...30.0	°C/°F
V3	V3-CA2	35117	38487.5	RW	Calibration Pb2	WORD		-30.0...30.0	°C/°F
V3	V3-CA3	35118	38487.6	RW	Calibration Pb3	WORD		-30.0...30.0	°C/°F
V3	V3-CA4	35119	38487.7	RW	Calibration Pb4	WORD		-30.0...30.0	°C/°F
V3	V3-CA5	35120	38488.0	RW	Calibration Pb5	WORD		-30.0...30.0	°C/°F
V3	V3-CA6	35121	38488.1	RW	Calibration Pb6	WORD		-30.0...30.0	bar/Psi
V3	V3-CA7	35122	38488.2	RW	Calibration Pb7	WORD		-30.0...30.0	bar/Psi
V3	V3-LdL	35311	38488.3	RW	Minimum possible value	WORD		-58.0...V3-HdL	°C/°F
V3	V3-HdL	35312	38488.4	RW	Maximum possible value.	WORD		V3-LdL...302	°C/°F
V3	V3-ddL	35313	38488.5	RW	Lock display during defrost	WORD		0/1/2	num
V3	V3-Ldd	35314	38488.6	RW	Unlock timeout “ddL”	WORD		0...250	min

FOLDER	LABEL	PAR. VALUE ADDR.	VIS PAR. ADDR.	R/W	DESCRIPTION	DATA SIZE	CPL	RANGE	MU
V3	V3-dro	35315	38488.7	RW	°C/°F selection. (0=°C, 1=°F)	WORD		0/1	flag
V3	V3-SbP	35316	38489.0	RW	Bar/Psi selection	WORD		0/1	flag
V3	V3-ddd	35317	38489.1	RW	Main Display	WORD		0...8	num
V3	V3-ddE	35318	38489.2	RW	Fundamental display on ECHO	WORD		0...8	num
V3	V3-rPH	35269	38489.3	RW	HACCP alarm probe selection	WORD		0...5	num
V3	V3-H00	35084	38489.4	RW	Type of Pb1-Pb2-Pb3-Pb4-Pb5 probes (0=NTC, 1=PTC, 2=Pt1000)	WORD		0/1/2	num
V3	V3-H02	35319	38489.5	RW	Key activation time	WORD		0...250	s
V3	V3-H08	35321	38489.6	RW	Stand-by mode	WORD		0/1/2	num
V3	V3-H11	35087	38489.7	RW	DI1 input configuration	WORD		-17...17	num
V3	V3-H12	35088	38490.0	RW	DI2 input configuration	WORD		-17...17	num
V3	V3-H13	35089	38490.1	RW	DI3 input configuration	WORD		-17...17	num
V3	V3-H14	35090	38490.2	RW	DI4 input configuration	WORD		-17...17	num
V3	V3-H15	35091	38490.3	RW	DI5 input configuration	WORD		-17...17	num
V3	V3-H16	35092	38490.4	RW	DI6 input configuration	WORD		-17...17	num
V3	V3-H17	35093	38490.5	RW	DI7 input configuration	WORD		-17...17	num
V3	V3-H18	35094	38490.6	RW	DI8 input configuration	WORD		-17...17	num
V3	V3-dti	35103	38490.7	RW	Unit of measurement for digital input 1 and 2	WORD		0/1	num
V3	V3-d11	35095	38491.0	RW	DI1 activation signalling delay	WORD		0...255	min/dti
V3	V3-d12	35096	38491.1	RW	DI2 activation signalling delay	WORD		0...255	min/dti
V3	V3-d13	35097	38491.2	RW	DI3 activation signalling delay	WORD		0...255	min
V3	V3-d14	35098	38491.3	RW	DI4 activation signalling delay	WORD		0...255	min
V3	V3-d15	35099	38491.4	RW	DI5 activation signalling delay	WORD		0...255	min
V3	V3-d16	35100	38491.5	RW	DI6 activation signalling delay	WORD		0...255	min
V3	V3-d17	35101	38491.6	RW	DI7 activation signalling delay	WORD		0...255	min
V3	V3-d18	35102	38491.7	RW	DI8 activation signalling delay	WORD		0...255	min
V3	V3-H21	35124	38492.0	RW	Configurability of digital output 1	WORD		0...14	num
V3	V3-H22	35125	38492.1	RW	Configurability of digital output 2	WORD		0...14	num
V3	V3-H23	35126	38492.2	RW	Configurability of digital output 3	WORD		0...14	num
V3	V3-H24	35127	38492.3	RW	Configurability of digital output 4	WORD		0...14	num
V3	V3-H25	35128	38492.4	RW	Configurability of digital output 5	WORD		0...14	num
V3	V3-H27	35130	38492.6	RW	Configurability of digital output 7	WORD		0...14	num
V3	V3-H29	35131	38492.7	RW	Enable buzzer	WORD		0/1	flag
V3	V3-H31	35322	38493.0	RW	Configuration of UP key	WORD		0...9	num
V3	V3-H32	35323	38493.1	RW	Configuration of DOWN key	WORD		0...9	num
V3	V3-H33	35324	38493.2	RW	ESC key configuration	WORD		0...9	num
V3	V3-H34	35325	38493.3	RW	FREE 1 key configuration	WORD		0...9	num
V3	V3-H35	35326	38493.4	RW	FREE 2 key configuration	WORD		0...9	num
V3	V3-H36	35327	38493.5	RW	FREE 3 key configuration	WORD		0...9	num
V3	V3-H37	35328	38493.6	RW	FREE 4 key configuration	WORD		0...9	num
V3	V3-H41	35104	38493.7	RW	Pb1 input configuration (0=Disable, 1=DI, 2=H00)	WORD		0/1/2	num
V3	V3-H42	35105	38494.0	RW	Pb2 input configuration (0=Disable, 1=DI, 2=H00)	WORD		0/1/2	num
V3	V3-H43	35106	38494.1	RW	Pb3 input configuration (0=Disable, 1=DI, 2=H00)	WORD		0/1/2	num
V3	V3-H44	35107	38494.2	RW	Pb4 input configuration (0=Disable, 1=DI, 2=H00)	WORD		0/1/2	num
V3	V3-H45	35108	38494.3	RW	Pb5 input configuration (0=Disable, 1=DI, 2=H00)	WORD		0/1/2	num
V3	V3-H46	35109	38494.4	RW	Pb6 input configuration (0=Disable, 1=DI, 2=4-20 mA)	WORD		0/1/2	num
V3	V3-H47	35110	38494.5	RW	Pb7 input configuration (0=Disable, 1=DI, 2=Ratio)	WORD		0/1/2	num
V3	V3-H50	35132	38494.6	RW	Configuration of analogue output type	WORD		0/1	flag
V3	V3-H51	35133	38494.7	RW	Regulator linked to analogue output	WORD		0/1/2	num
V3	V3-H68	35134	38495.0	RW	Clock presence	WORD		0/1	flag

FOLDER	LABEL	PAR. VALUE ADDR.	VIS PAR. ADDR.	R/W	DESCRIPTION	DATA SIZE	CPL	RANGE	MU
V3	V3-H70	35112	38495.1	RW	Selection of probe 1 for virtual probe	WORD		0...5	num
V3	V3-H71	35113	38495.2	RW	Selection of probe 2 for virtual probe	WORD		0...5	num
V3	V3-H72	35114	38495.3	RW	% calculation virtual probe day	WORD		0...100	%
V3	V3-H73	35115	38495.4	RW	% calculation virtual probe night	WORD		0...100	%
V3	V3-H74	35343	38499.7	RW	Sensor 1 selection for virtual filtered sensor	WORD		0...6	num
V3	V3-H75	35344	38500.0	RW	Thousandth of input signal to the virtual filtered sensor	WORD		1...1000	num
V3	V3-H76	35346	38500.1	RW	Offset virtual filtered sensor	WORD		-999.9...999.9	num
V3	V3-Ety	35329	38495,5	RW	Electronic expansion valve driver selection	WORD		0/1	num
V3	V3-UL	---	38498.0	RW	Visibility of parameter transfer function (Device -> UNICARD/MFK)	2 BIT		0...3	num
V3	V3-dL	---	38498.1	RW	Visibility of parameter transfer function (UNICARD/MFK -> Device)	2 BIT		0...3	num
V3	V3-Fr	---	38498.2	RW	UNICARD/MFK formatting function visibility	2 BIT		0...3	num
APPLICATION 4 PARAMETERS									
V4	V4-rE	35580	38560.0	RW	Regulation mode	WORD		0...5	num
V4	V4-rP1	35581	38560.1	RW	Control probe 1	WORD		0...8	num
V4	V4-rP2	35582	38560.2	RW	Thermostat 2 regulation probe	WORD		0...8	num
V4	V4-SP1	35583	38560.3	RW	Setpoint	WORD		V4-LS1...V4-HS1	°C/°F
V4	V4-dF1	35584	38560.4	RW	Differential/proportional band	WORD		-58.0...302	°C/°F
V4	V4-SP2	35585	38560.5	RW	Setpoint according to thermostat	WORD		V4-LS2...V4-HS2	°C/°F
V4	V4-dF2	35586	38560.6	RW	Differential according to thermostat	WORD		-58.0...302	°C/°F
V4	V4-Stt	35589	38560.7	RW	Differential control mode	WORD		0/1	flag
V4	V4-HS1	35592	38561.0	RW	Maximum SP1 value	WORD		V4-LS1...V4-HdL	°C/°F
V4	V4-LS1	35593	38561.1	RW	Minimum SP1 value	WORD		V4-LdL...V4-HS1	°C/°F
V4	V4-HS2	35594	38561.2	RW	Maximum SP2 value	WORD		V4-LS2...V4-HdL	°C/°F
V4	V4-LS2	35595	38561.3	RW	Minimum SP2 value	WORD		V4-LdL...V4-HS2	°C/°F
V4	V4-HC1	35590	38561.4	RW	Thermostat mode 1	WORD		0/1	flag
V4	V4-HC2	35591	38561.5	RW	Thermostat mode 2	WORD		0/1	flag
V4	V4-Cit	35600	38562.1	RW	Minimum compressor ON time	WORD		0...250	min
V4	V4-CAt	35601	38562.2	RW	Maximum compressor ON time	WORD		0...250	min
V4	V4-Ont	35606	38561.7	RW	Probe error ON time	WORD		0...250	min
V4	V4-OFt	35607	38562.0	RW	Probe error OFF time	WORD		0...250	min
V4	V4-dOn	35602	38562.3	RW	Delayed start	WORD		0...250	s
V4	V4-dOF	35603	38562.4	RW	Delay after switching off	WORD		0...250	min
V4	V4-dbi	35604	38562.5	RW	Time lag between starts	WORD		0...250	min
V4	V4-OdO	35605	38562.6	RW	Output delay from power-on	WORD		0...250	min
V4	V4-OF1	35611	38563.3	RW	Forced remote offset	WORD		-50.0...50.0	°C/°F
V4	V4-SS1	35718	38594.4	RW	Compressor Softstart: hotgas valve opening advance	WORD		0...250	s
V4	V4-SS2	35719	38594.5	RW	Compressor Softstart: hotgas valve opening delay	WORD		0...250	s
V4	V4-dP1	35612	38563.4	RW	Defrost probe 1 selection	WORD		0...8	num
V4	V4-dP2	35613	38563.5	RW	Defrost probe 2 selection	WORD		0...8	num
V4	V4-dtY	35616	38563.6	RW	Defrost mode	WORD		0...4	num
V4	V4-dFt	35614	38563.7	RW	Defrost activation mode with two probes	WORD		0...2	num
V4	V4-dit	35617	38564.0	RW	Interval between defrost cycles	WORD		0...250	hours/ dt1
V4	V4-dt1	35620	38564.1	RW	Unit of measurement for defrost interval	WORD		0/1/2	num
V4	V4-dt2	35621	38564.2	RW	Unit of measurement for defrost duration	WORD		0/1/2	num
V4	V4-dCt	35615	38564.3	RW	Defrost interval count mode	WORD		0...5	num
V4	V4-dOH	35622	38564.4	RW	Defrost interval count mode	WORD		0...250	min
V4	V4-dE1	35618	38564.5	RW	Evaporator 1 defrost timeout	WORD		1...250	min/dt2
V4	V4-dE2	35619	38564.6	RW	Evaporator 2 defrost timeout	WORD		1...250	min/dt2
V4	V4-dS1	35624	38564.7	RW	Probe 1 defrost end temperature	WORD		-58.0...302	°C/°F
V4	V4-dS2	35625	38565.0	RW	Probe 2 defrost end temperature	WORD		-58.0...302	°C/°F
V4	V4-dSS	35623	38565.1	RW	Start defrost temperature threshold	WORD		-58.0...302	°C/°F

FOLDER	LABEL	PAR. VALUE ADDR.	VIS PAR. ADDR.	R/W	DESCRIPTION	DATA SIZE	CPL	RANGE	MU
V4	V4-dPO	35626	38565.2	RW	Defrost activation request from power-on	WORD		0/1	flag
V4	V4-tcd	35627	38565.3	RW	Minimum compressor ON or OFF time before defrost	WORD		-60...60	min
V4	V4-ndE	35628	38565.4	RW	Minimum defrost time (hot gas only)	WORD		0...250	min
V4	V4-PdC	35629	38565.5	RW	Hot gas extraction time at defrost end	WORD		0...250	min
V4	V4-tPd	35631	38565.6	RW	Pump down time before defrost startup	WORD		0...255	min
V4	V4-dPH	35570	38565.7	RW	Periodic start defrost hour	WORD		0...24	hours
V4	V4-dPn	35571	38566.0	RW	Periodic start defrost minutes	WORD		0...59	min
V4	V4-dPd	35572	38566.1	RW	Regular defrost interval duration	WORD		1...7	day
V4	V4-Fd1	35519	38566.2	RW	Weekend/public holiday 1	WORD		0...7	num
V4	V4-Fd2	35520	38566.3	RW	Weekend/public holiday 2	WORD		0...7	num
V4	V4-Edt	35521	38566.4	RW	Custom duration and temperature for each event	WORD		0/1	flag
V4	V4-d1H	35522	38566.5	RW	Start time hour weekday defrost 1	WORD		0...24	hours
V4	V4-d1n	35523	38566.6	RW	Start time minutes weekday defrost 1	WORD		0...59	min
V4	V4-d1t	35524	38566.7	RW	Weekday defrost 1 duration	WORD		0...250	min
V4	V4-d1S	35525	38567.0	RW	Weekday defrost 1 end temperature	WORD		-58.0...302	°C/°F
V4	V4-d2H	35526	38567.1	RW	Start time hour weekday defrost 2	WORD		V4-d1H...24	hours
V4	V4-d2n	35527	38567.2	RW	Start time minutes weekday defrost 2	WORD		0...59	min
V4	V4-d2t	35528	38567.3	RW	Weekday defrost 2 duration	WORD		0...250	min
V4	V4-d2S	35529	38567.4	RW	Weekday defrost 2 end temperature	WORD		-58.0...302	°C/°F
V4	V4-d3H	35530	38567.5	RW	Start time hour weekday defrost 3	WORD		V4-d2H...24	hours
V4	V4-d3n	35531	38567.6	RW	Start time minutes weekday defrost 3	WORD		0...59	min
V4	V4-d3t	35532	38567.7	RW	Weekday defrost 3 duration	WORD		0...250	min
V4	V4-d3S	35533	38568.0	RW	Weekday defrost 3 end temperature	WORD		-58.0...302	°C/°F
V4	V4-d4H	35534	38568.1	RW	Start time hour weekday defrost 4	WORD		V4-d3H...24	hours
V4	V4-d4n	35535	38568.2	RW	Start time minutes weekday defrost 4	WORD		0...59	min
V4	V4-d4t	35536	38568.3	RW	Weekday defrost 4 duration	WORD		0...250	min
V4	V4-d4S	35537	38568.4	RW	Weekday defrost 4 end temperature	WORD		-58.0...302	°C/°F
V4	V4-d5H	35538	38568.5	RW	Start time hour weekday defrost 5	WORD		V4-d4H...24	hours
V4	V4-d5n	35539	38568.6	RW	Start time minutes weekday defrost 5	WORD		0...59	min
V4	V4-d5t	35540	38568.7	RW	Weekday defrost 5 duration	WORD		0...250	min
V4	V4-d5S	35541	38569.0	RW	Weekday defrost 5 end temperature	WORD		-58.0...302	°C/°F
V4	V4-d6H	35542	38569.1	RW	Start time hour weekday defrost 6	WORD		V4-d5H...24	hours
V4	V4-d6n	35543	38569.2	RW	Start time minutes weekday defrost 6	WORD		0...59	min
V4	V4-d6t	35544	38569.3	RW	Weekday defrost 6 duration	WORD		0...250	min
V4	V4-d6S	35545	38569.4	RW	Weekday defrost 6 end temperature	WORD		-58.0...302	°C/°F
V4	V4-F1H	35546	38569.5	RW	Start time hour weekend/public holiday defrost 1	WORD		0...24	hours
V4	V4-F1n	35547	38569.6	RW	Start time minutes weekend/public holiday defrost 1	WORD		0...59	min
V4	V4-F1t	35548	38569.7	RW	Weekend/public holiday defrost 1 duration	WORD		0...250	min
V4	V4-F1S	35549	38570.0	RW	Weekend defrost 1 end temperature	WORD		-58.0...302	°C/°F
V4	V4-F2H	35550	38570.1	RW	Start time hour weekend/public holiday defrost 2	WORD		V4-F1H...24	hours
V4	V4-F2n	35551	38570.2	RW	Start time minutes weekend/public holiday defrost 2	WORD		0...59	min
V4	V4-F2t	35552	38570.3	RW	Weekend/public holiday defrost 2 duration	WORD		0...250	min
V4	V4-F2S	35553	38570.4	RW	Weekend defrost 1 end temperature	WORD		-58.0...302	°C/°F
V4	V4-F3H	35554	38570.5	RW	Start time hour weekend/public holiday defrost 3	WORD		V4-F2H...24	hours
V4	V4-F3n	35555	38570.6	RW	Start time minutes weekend/public holiday defrost 3	WORD		0...59	min
V4	V4-F3t	35556	38570.7	RW	Weekend/public holiday defrost 3 duration	WORD		0...250	min
V4	V4-F3S	35557	38571.0	RW	Weekend defrost 1 end temperature	WORD		-58.0...302	°C/°F
V4	V4-F4H	35558	38571.1	RW	Start time hour weekend/public holiday defrost 4	WORD		V4-F3H...24	hours
V4	V4-F4n	35559	38571.2	RW	Start time minutes weekend/public holiday defrost 4	WORD		0...59	min
V4	V4-F4t	35560	38571.3	RW	Weekend/public holiday defrost 4 duration	WORD		0...250	min
V4	V4-F4S	35561	38571.4	RW	Weekend defrost 1 end temperature	WORD		-58.0...302	°C/°F
V4	V4-F5H	35562	38571.5	RW	Start time hour weekend/public holiday defrost 5	WORD		V4-F4H...24	hours
V4	V4-F5n	35563	38571.6	RW	Start time minutes weekend/public holiday defrost 5	WORD		0...59	min
V4	V4-F5t	35564	38571.7	RW	Weekend/public holiday defrost 5 duration	WORD		0...250	min
V4	V4-F5S	35565	38572.0	RW	Weekend defrost 1 end temperature	WORD		-58.0...302	°C/°F

FOLDER	LABEL	PAR. VALUE ADDR.	VIS PAR. ADDR.	R/W	DESCRIPTION	DATA SIZE	CPL	RANGE	MU
V4	V4-F6H	35566	38572.1	RW	Start time hour weekend/public holiday defrost 6	WORD		V4-F5H...24	hours
V4	V4-F6n	35567	38572.2	RW	Start time minutes weekend/public holiday defrost 6	WORD		0...59	min
V4	V4-F6t	35568	38572.3	RW	Weekend/public holiday defrost 6 duration	WORD		0...250	min
V4	V4-F6S	35569	38572.4	RW	Weekend defrost 6 end temperature	WORD		-58.0...302	°C/°F
V4	V4-FP1	35632	38572.5	RW	Evaporator fan probe in normal mode	WORD		0...8	num
V4	V4-FP2	35633	38572.6	RW	Evaporator fan probe during defrost	WORD		0...8	num
V4	V4-FPt	35634	38572.7	RW	FSt parameter mode	WORD		0/1	flag
V4	V4-FSt	35635	38573.0	RW	Fans disabling temperature	WORD		-58.0...302	°C/°F
V4	V4-FAd	35636	38573.1	RW	Fans differential	WORD		0.1...25.0	°C/°F
V4	V4-Fdt	35637	38573.2	RW	Fan activation delay from compressor start	WORD		0...250	min
V4	V4-dt	35642	38573.3	RW	Dripping time	WORD		0...250	min
V4	V4-dFd	35640	38573.4	RW	Evaporator fans mode in defrost	WORD		0/1	flag
V4	V4-FCO	35639	38573.5	RW	Evaporator fans mode	WORD		0...3	num
V4	V4-FdC	35638	38573.7	RW	Fan switch-off delay from compressor stoppage	WORD		0...250	min
V4	V4-FOn	35643	38574.0	RW	Fans ON time in duty cycle	WORD		0...250	min
V4	V4-FOF	35644	38574.1	RW	Fans OFF time in duty cycle	WORD		0...250	min
V4	V4-Fnn	35645	38574.2	RW	Duty cycle on time during night mode	WORD		0...250	min
V4	V4-FnF	35646	38574.3	RW	Duty cycle off time during night mode	WORD		0...250	min
V4	V4-rA1	35660	38574.4	RW	Temperature alarm probe 1 selection	WORD		0...7	num
V4	V4-rA2	35661	38574.5	RW	Temperature alarm probe 2 selection	WORD		0...7	num
V4	V4-Att	35662	38574.6	RW	HAL and LAL parameter mode	WORD		0/1	flag
V4	V4-AFd	35663	38574.7	RW	Alarm setpoint differential	WORD		0.1...25.0	°C/°F
V4	V4-HA1	35664	38575.0	RW	Probe 1 maximum alarm	WORD		V4-LA1...302	°C/°F
V4	V4-LA1	35665	38575.1	RW	Probe 1 minimum alarm	WORD		-58.0...V4-HA1	°C/°F
V4	V4-HA2	35666	38575.2	RW	Probe 2 maximum alarm	WORD		V4-LA2...302	°C/°F
V4	V4-LA2	35667	38575.3	RW	Probe 2 minimum alarm	WORD		-58.0...V4-HA2	°C/°F
V4	V4-PAO	35668	38575.4	RW	Alarm exclusion at power-on	WORD		0...10	hours
V4	V4-dAO	35670	38575.5	RW	Alarm exclusion after defrost	WORD		0...250	min
V4	V4-OAO	35669	38575.6	RW	Alarm signalling delay from door closure	WORD		0...10	hours
V4	V4-tdO	35714	38575.7	RW	Open door disabling time	WORD		0...250	num
V4	V4-tA1	35671	38576.0	RW	Alarm LA1 and HA1 signalling delay time	WORD		0...250	min
V4	V4-tA2	35672	38576.1	RW	Alarm LA2 and HA2 signalling delay time	WORD		0...250	min
V4	V4-dAt	35630	38576.2	RW	Enable alarm at end of defrost	WORD		0/1	flag
V4	V4-EAL	35674	38576.3	RW	External alarm switches off loads	WORD		0/1/2	num
V4	V4-tP	35715	38576.4	RW	Enable all keys to acknowledge an alarm	WORD		0/1	flag
V4	V4-Art	35659	38576.5	RW	Link supervision alarm activation period	WORD		0...250	min*10
V4	V4-dSd	35656	38576.6	RW	Enable light relay from door switch	WORD		0/1	flag
V4	V4-dLt	35657	38576.7	RW	Light relay deactivation delay	WORD		0...250	min
V4	V4-OFL	35658	38577.0	RW	Light key always disables light relay	WORD		0/1	flag
V4	V4-dOd	35673	38577.1	RW	Door switch switches off loads	WORD		0...3	num
V4	V4-dOA	35675	38577.2	RW	Action forced by digital input	WORD		0...5	num
V4	V4-PEA	35676	38577.3	RW	Select DI for lock/unlock resources function	WORD		0...3	num
V4	V4-dCO	35677	38577.4	RW	Evaporator fan compressor activation/switch-off delay	WORD		0...250	min
V4	V4-dFO	35678	38577.5	RW	Evaporator fan activation/switch-off delay	WORD		0...250	min
V4	V4-ASb	35704	38577.6	RW	AUX/Light active in OFF key/input	WORD		0/1	flag
V4	V4-L00	35456	38577.7	RW	Probe sharing	WORD		0...7	num
V4	V4-L01	35457	38578.0	RW	Displayed value sharing	WORD		0/1/2	num
V4	V4-L02	35458	38578.1	RW	Send Setpoint value when modified	WORD		0/1	flag
V4	V4-L03	35459	38578.2	RW	Send defrost request	WORD		0/1/2	num
V4	V4-L04	35460	38578.3	RW	End defrost mode	WORD		0/1	flag
V4	V4-L05	35461	38578.4	RW	Standby command synchronisation	WORD		0/1	flag
V4	V4-L06	35462	38578.5	RW	Lights command synchronisation	WORD		0/1	flag
V4	V4-L07	35463	38578.6	RW	Reduced setpoint command synchronisation	WORD		0/1	flag
V4	V4-L08	35464	38578.7	RW	AUX command synchronisation	WORD		0/1	flag
V4	V4-L09	35465	38579.0	RW	Share saturation probe (pressure)	WORD		0/1	flag

FOLDER	LABEL	PAR. VALUE ADDR.	VIS PAR. ADDR.	R/W	DESCRIPTION	DATA SIZE	CPL	RANGE	MU
V4	V4-L10	35716	38579.1	RW	Timeout waiting for end of dependent defrosts	WORD		0...250	min
V4	V4-L11	35466	38596.2	RW	Number of devices connected in Link[2] for alarm	WORD		0...8	min
V4	V4-L12	35467	38596.3	RW	Alarm sharing	WORD		0/1/2	min
V4	V4-dcS	35650	38579.4	RW	Deep Cooling setpoint	WORD		-58.0...302	°C/°F
V4	V4-tdc	35651	38579.5	RW	Deep Cooling Duration	WORD		0...250	min
V4	V4-dcc	35652	38579.6	RW	Wait for defrost cycle start	WORD		0...250	min
V4	V4-ESt	35579	38579.7	RW	Type of Energy Saving	WORD		0...4	num
V4	V4-ESF	35647	38580.0	RW	Night activation mode	WORD		0/1	flag
V4	V4-Cdt	35648	38580.1	RW	Min. door closing time for reduced set activation	WORD		0...255	min*10
V4	V4-ESo	35649	38580.2	RW	Open door cumulative time	WORD		0...10	num
V4	V4-OS1	35596	38580.3	RW	Offset SP1	WORD		-50.0...50.0	°C/°F
V4	V4-OS2	35597	38580.4	RW	Offset SP2	WORD		-50.0...50.0	°C/°F
V4	V4-Od1	35598	38580.5	RW	Offset energy saving door 1	WORD		-50.0...50.0	°C/°F
V4	V4-Od2	35599	38580.6	RW	Offset energy saving door 2	WORD		-50.0...50.0	°C/°F
V4	V4-dn1	35587	38580.7	RW	dn1 Differential in energy saving mode 1	WORD		-58.0...302	°C/°F
V4	V4-dn2	35588	38581.0	RW	dn2 Differential in energy saving mode 2	WORD		-58.0...302	°C/°F
V4	V4-EdH	35573	38581.1	RW	Weekday Energy Saving start hour	WORD		0...24	hours
V4	V4-Edn	35574	38581.2	RW	Weekday Energy Saving start minutes	WORD		0...59	min
V4	V4-Edd	35575	38581.3	RW	Weekday Energy Saving duration	WORD		1...72	hours
V4	V4-EFH	35576	38581.4	RW	Weekend Energy Saving start hour	WORD		0...24	hours
V4	V4-EFn	35577	38581.5	RW	Weekend Energy Saving start minutes	WORD		0...59	min
V4	V4-EFd	35578	38581.6	RW	Weekend Energy Saving duration	WORD		1...72	hours
V4	V4-FH	35679	38581.7	RW	Regulation mode	WORD		0...8	num
V4	V4-FHt	35681	38582.0	RW	Frame Heater period	WORD		1...2500	s*10
V4	V4-FH0	35682	38582.1	RW	Frame Heater setpoint	WORD		-58.0...302	°C/°F
V4	V4-FH1	35683	38582.2	RW	Frame Heater offset	WORD		0.0...25.0	°C/°F
V4	V4-FH2	35684	38582.3	RW	Frame Heater range	WORD		-58.0...302	°C/°F
V4	V4-FH3	35685	38582.4	RW	Min percentage	WORD		0...100	%
V4	V4-FH4	35686	38582.5	RW	Maximum percentage/Duty Cycle Day	WORD		0...100	%
V4	V4-FH5	35687	38582.6	RW	Maximum percentage/Duty Cycle Night (ES)	WORD		0...100	%
V4	V4-FH6	35688	38582.7	RW	Percentage during defrost	WORD		0...100	%
V4	V4-LOC	35691	38583.0	RW	Keypad lock	WORD		0/1	flag
V4	V4-PS1	35692	38583.1	RW	Password 1	WORD		0...250	num
V4	V4-PS2	35693	38583.2	RW	Password 2	WORD		0...250	num
V4	V4-ndt	35694	38583.3	RW	Display with decimal point	WORD		0/1	flag
V4	V4-CA1	35500	38583.4	RW	Calibration Pb1	WORD		-30.0...30.0	°C/°F
V4	V4-CA2	35501	38583.5	RW	Calibration Pb2	WORD		-30.0...30.0	°C/°F
V4	V4-CA3	35502	38583.6	RW	Calibration Pb3	WORD		-30.0...30.0	°C/°F
V4	V4-CA4	35503	38583.7	RW	Calibration Pb4	WORD		-30.0...30.0	°C/°F
V4	V4-CA5	35504	38584.0	RW	Calibration Pb5	WORD		-30.0...30.0	°C/°F
V4	V4-CA6	35505	38584.1	RW	Calibration Pb6	WORD		-30.0...30.0	bar/Psi
V4	V4-CA7	35506	38584.2	RW	Calibration Pb7	WORD		-30.0...30.0	bar/Psi
V4	V4-LdL	35695	38584.3	RW	Minimum possible value	WORD		-58.0...V4-HdL	°C/°F
V4	V4-HdL	35696	38584.4	RW	Maximum possible value.	WORD		V4-LdL...302	°C/°F
V4	V4-ddL	35697	38584.5	RW	Lock display during defrost	WORD		0...2	num
V4	V4-Ldd	35698	38584.6	RW	Unlock timeout “ddL”	WORD		0...250	min
V4	V4-dro	35699	38584.7	RW	°C/°F selection. (0=°C, 1=°F)	WORD		0/1	flag
V4	V4-SbP	35700	38585.0	RW	Bar/Psi selection	WORD		0/1	flag
V4	V4-ddd	35701	38585.1	RW	Main Display	WORD		0...8	num
V4	V4-ddE	35702	38585.2	RW	Fundamental display on ECHO	WORD		0...8	num
V4	V4-rPH	35653	38585.3	RW	HACCP alarm probe selection	WORD		0...5	num
V4	V4-H00	35468	38585.4	RW	Type of Pb1-Pb2-Pb3-Pb4-Pb5 probes (0=NTC, 1=PTC, 2=Pt1000)	WORD		0...2	num
V4	V4-H02	35703	38585.5	RW	Key activation time	WORD		0...250	sec
V4	V4-H08	35705	38585.6	RW	Stand-by mode	WORD		0...2	num
V4	V4-H11	35471	38585.7	RW	DI1 input configuration	WORD		-17...17	num

FOLDER	LABEL	PAR. VALUE ADDR.	VIS PAR. ADDR.	R/W	DESCRIPTION	DATA SIZE	CPL	RANGE	MU
V4	V4-H12	35472	38586.0	RW	DI2 input configuration	WORD		-17...17	num
V4	V4-H13	35473	38586.1	RW	DI3 input configuration	WORD		-17...17	num
V4	V4-H14	35474	38586.2	RW	DI4 input configuration	WORD		-17...17	num
V4	V4-H15	35475	38586.3	RW	DI5 input configuration	WORD		-17...17	num
V4	V4-H16	35476	38586.4	RW	DI6 input configuration	WORD		-17...17	num
V4	V4-H17	35477	38586.5	RW	DI7 input configuration	WORD		-17...17	num
V4	V4-H18	35478	38586.6	RW	DI8 input configuration	WORD		-17...17	num
V4	V4-dti	35487	38586.7	RW	Unit of measurement for digital input 1 and 2	WORD		0/1	num
V4	V4-d11	35479	38587.0	RW	DI activation signalling delay	WORD		0...255	min/dti
V4	V4-d12	35480	38587.1	RW	DI2 activation signalling delay	WORD		0...255	min/dti
V4	V4-d13	35481	38587.2	RW	DI3 activation signalling delay	WORD		0...255	min
V4	V4-d14	35482	38587.3	RW	DI4 activation signalling delay	WORD		0...255	min
V4	V4-d15	35483	38587.4	RW	DI5 activation signalling delay	WORD		0...255	min
V4	V4-d16	35484	38587.5	RW	DI6 activation signalling delay	WORD		0...255	min
V4	V4-d17	35485	38587.6	RW	DI7 activation signalling delay	WORD		0...255	min
V4	V4-d18	35486	38587.7	RW	DI8 activation signalling delay	WORD		0...255	min
V4	V4-H21	35508	38588.0	RW	Configurability of digital output 1	WORD		0...14	num
V4	V4-H22	35509	38588.1	RW	Configurability of digital output 2	WORD		0...14	num
V4	V4-H23	35510	38588.2	RW	Configurability of digital output 3	WORD		0...14	num
V4	V4-H24	35511	38588.3	RW	Configurability of digital output 4	WORD		0...14	num
V4	V4-H25	35512	38588.4	RW	Configurability of digital output 5	WORD		0...14	num
V4	V4-H27	35514	38588.6	RW	Configurability of digital output 7	WORD		0...14	num
V4	V4-H29	35515	38588.7	RW	Enable buzzer	WORD		0/1	flag
V4	V4-H31	35706	38589.0	RW	Configuration of UP key	WORD		0...9	num
V4	V4-H32	35707	38589.1	RW	Configuration of DOWN key	WORD		0...9	num
V4	V4-H33	35708	38589.2	RW	ESC key configuration	WORD		0...9	num
V4	V4-H34	35709	38589.3	RW	FREE 1 key configuration	WORD		0...9	num
V4	V4-H35	35710	38589.4	RW	FREE 2 key configuration	WORD		0...9	num
V4	V4-H36	35711	38589.5	RW	FREE 3 key configuration	WORD		0...9	num
V4	V4-H37	35712	38589.6	RW	FREE 4 key configuration	WORD		0...9	num
V4	V4-H41	35488	38589.7	RW	Pb1 input configuration (0=Disable, 1=DI, 2=H00)	WORD		0/1/2	num
V4	V4-H42	35489	38590.0	RW	Pb2 input configuration (0=Disable, 1=DI, 2=H00)	WORD		0/1/2	num
V4	V4-H43	35490	38590.1	RW	Pb3 input configuration (0=Disable, 1=DI, 2=H00)	WORD		0/1/2	num
V4	V4-H44	35491	38590.2	RW	Pb4 input configuration (0=Disable, 1=DI, 2=H00)	WORD		0/1/2	num
V4	V4-H45	35492	38590.3	RW	Pb5 input configuration (0=Disable, 1=DI, 2=H00)	WORD		0/1/2	num
V4	V4-H46	35493	38590.4	RW	Pb6 input configuration (0=Disable, 1=DI, 2=4-20 mA)	WORD		0/1/2	num
V4	V4-H47	35494	38590.5	RW	Pb7 input configuration (0=Disable, 1=DI, 2=Ratio)	WORD		0/1/2	num
V4	V4-H50	35516	38590.6	RW	Configuration of analogue output type	WORD		0/1	flag
V4	V4-H51	35517	38590.7	RW	Regulator linked to analogue output	WORD		0/1/2	num
V4	V4-H68	35518	38591.0	RW	Clock presence	WORD		0/1	flag
V4	V4-H70	35496	38591.1	RW	Selection of probe 1 for virtual probe	WORD		0...5	num
V4	V4-H71	35497	38591.2	RW	Selection of probe 2 for virtual probe	WORD		0...5	num
V4	V4-H72	35498	38591.3	RW	% calculation virtual probe day	WORD		0...100	%
V4	V4-H73	35499	38591.4	RW	% calculation virtual probe night	WORD		0...100	%
V4	V4-H74	35727	38595.7	RW	Sensor 1 selection for virtual filtered sensor	WORD		0...6	num
V4	V4-H75	35728	38596.0	RW	Thousandth of input signal to the virtual filtered sensor	WORD		1...1000	num
V4	V4-H76	35730	38596.1	RW	Offset virtual filtered sensor	WORD		-999.9...999.9	num
V4	V4-Ety	35713	38591,5	RW	Electronic expansion valve driver selection	WORD		0/1	num

FOLDER	LABEL	PAR. VALUE ADDR.	VIS PAR. ADDR.	R/W	DESCRIPTION	DATA SIZE	CPL	RANGE	MU
V4	V4-UL	---	38594.0	RW	Parameter transfer function visibility (Device -> UNICARD/MFK)	2 BIT		0...3	num
V4	V4-dL	---	38594.1	RW	Parameter transfer function visibility (UNICARD/MFK -> Device)	2 BIT		0...3	num
V4	V4-Fr	---	38594.2	RW	UNICARD/MFK formatting function visibility	2 BIT		0...3	num
APPLICATION 5 PARAMETERS									
V5	V5-rE	35964	38656.0	RW	Regulation mode	WORD		0...5	num
V5	V5-rP1	35965	38656.1	RW	Control probe 1	WORD		0...8	num
V5	V5-rP2	35966	38656.2	RW	Thermostat 2 regulation probe	WORD		0...8	num
V5	V5-SP1	35967	38656.3	RW	Setpoint	WORD		V5-LS1...V5-HS1	°C/°F
V5	V5-dF1	35968	38656.4	RW	Differential/proportional band	WORD		-58.0...302	°C/°F
V5	V5-SP2	35969	38656.5	RW	Setpoint according to thermostat	WORD		V5-LS2...V5-HS2	°C/°F
V5	V5-dF2	35970	38656.6	RW	Differential according to thermostat	WORD		-58.0...302	°C/°F
V5	V5-Stt	35973	38656.7	RW	Differential control mode	WORD		0/1	flag
V5	V5-HS1	35976	38657.0	RW	Maximum SP1 value	WORD		V5-LS1...V5-HdL	°C/°F
V5	V5-LS1	35977	38657.1	RW	Minimum SP1 value	WORD		V5-LdL...V5-HS1	°C/°F
V5	V5-HS2	35978	38657.2	RW	Maximum SP2 value	WORD		V5-LS2...V5-HdL	°C/°F
V5	V5-LS2	35979	38657.3	RW	Minimum SP2 value	WORD		V5-LdL...V5-HS2	°C/°F
V5	V5-HC1	35974	38657.4	RW	Thermostat mode 1	WORD		0/1	flag
V5	V5-HC2	35975	38657.5	RW	Thermostat mode 2	WORD		0/1	flag
V5	V5-Cit	35984	38657.7	RW	Minimum compressor ON time	WORD		0...250	min
V5	V5-CAt	35985	38658.0	RW	Maximum compressor ON time	WORD		0...250	min
V5	V5-Ont	35990	38658.1	RW	Probe error ON time	WORD		0...250	min
V5	V5-OFt	35991	38658.2	RW	Probe error OFF time	WORD		0...250	min
V5	V5-dOn	35986	38658.3	RW	Delayed start	WORD		0...250	s
V5	V5-dOF	35987	38658.4	RW	Delay after switching off	WORD		0...250	min
V5	V5-dbi	35988	38658.5	RW	Time lag between starts	WORD		0...250	min
V5	V5-OdO	35989	38658.6	RW	Output delay from power-on	WORD		0...250	min
V5	V5-OF1	35995	38659.3	RW	Forced remote offset	WORD		-50.0...50.0	°C/°F
V5	V5-SS1	36102	38690.4	RW	Compressor Softstart: hotgas valve opening advance	WORD		0...250	s
V5	V5-SS2	36103	38690.5	RW	Compressor Softstart: hotgas valve opening delay	WORD		0...250	s
V5	V5-dP1	35996	38659.4	RW	Defrost probe 1 selection	WORD		0...8	num
V5	V5-dP2	35997	38659.5	RW	Defrost probe 2 selection	WORD		0...8	num
V5	V5-dtY	36000	38659.6	RW	Defrost mode	WORD		0...4	num
V5	V5-dFt	35998	38659.7	RW	Defrost activation mode with two probes	WORD		0/1/2	num
V5	V5-dit	36001	38660.0	RW	Interval between defrost cycles	WORD		0...250	hours/ dt1
V5	V5-dt1	36004	38660.1	RW	Unit of measurement for defrost interval	WORD		0/1/2	num
V5	V5-dt2	36005	38660.2	RW	Unit of measurement for defrost duration	WORD		0/1/2	num
V5	V5-dCt	35999	38660.3	RW	Defrost interval count mode	WORD		0...5	num
V5	V5-dOH	36006	38660.4	RW	Defrost interval count mode	WORD		0...250	min
V5	V5-dE1	36002	38660.5	RW	Evaporator 1 defrost timeout	WORD		1...250	min/dt2
V5	V5-dE2	36003	38660.6	RW	Evaporator 2 defrost timeout	WORD		1...250	min/dt2
V5	V5-dS1	36008	38660.7	RW	Probe 1 defrost end temperature	WORD		-58.0...302	°C/°F
V5	V5-dS2	36009	38661.0	RW	Probe 2 defrost end temperature	WORD		-58.0...302	°C/°F
V5	V5-dSS	36007	38661.1	RW	Start defrost temperature threshold	WORD		-58.0...302	°C/°F
V5	V5-dPO	36010	38661.2	RW	Defrost activation request from power-on	WORD		0/1	flag
V5	V5-tcd	36011	38661.3	RW	Minimum compressor ON or OFF time before defrost	WORD		-60...60	min
V5	V5-ndE	36012	38661.4	RW	Minimum defrost time (hot gas only)	WORD		0...250	min
V5	V5-PdC	36013	38661.5	RW	Hot gas extraction time at defrost end	WORD		0...250	min
V5	V5-tPd	36015	38661.6	RW	Pump down time before defrost startup	WORD		0...255	min
V5	V5-dPH	35954	38661.7	RW	Periodic start defrost hour	WORD		0...24	hours
V5	V5-dPn	35955	38662.0	RW	Periodic start defrost minutes	WORD		0...59	min
V5	V5-dPd	35956	38662.1	RW	Regular defrost interval duration	WORD		1...7	day
V5	V5-Fd1	35903	38662.2	RW	Weekend/public holiday 1	WORD		0...7	num

FOLDER	LABEL	PAR. VALUE ADDR.	VIS PAR. ADDR.	R/W	DESCRIPTION	DATA SIZE	CPL	RANGE	MU
V5	V5-Fd2	35904	38662.3	RW	Weekend/public holiday 2	WORD		0...7	num
V5	V5-Edt	35905	38662.4	RW	Custom duration and temperature for each event	WORD		0/1	flag
V5	V5-d1H	35906	38662.5	RW	Start time hour weekday defrost 1	WORD		0...24	hours
V5	V5-d1n	35907	38662.6	RW	Start time minutes weekday defrost 1	WORD		0...59	min
V5	V5-d1t	35908	38662.7	RW	Weekday defrost 1 duration	WORD		0...250	min
V5	V5-d1S	35909	38663.0	RW	Weekday defrost 1 end temperature	WORD		-58.0...302	°C/°F
V5	V5-d2H	35910	38663.1	RW	Start time hour weekday defrost 2	WORD		V5-d1H...24	hours
V5	V5-d2n	35911	38663.2	RW	Start time minutes weekday defrost 2	WORD		0...59	min
V5	V5-d2t	35912	38663.3	RW	Weekday defrost 2 duration	WORD		0...250	min
V5	V5-d2S	35913	38663.4	RW	Weekday defrost 2 end temperature	WORD		-58.0...302	°C/°F
V5	V5-d3H	35914	38663.5	RW	Start time hour weekday defrost 3	WORD		V5-d2H...24	hours
V5	V5-d3n	35915	38663.6	RW	Start time minutes weekday defrost 3	WORD		0...59	min
V5	V5-d3t	35916	38663.7	RW	Weekday defrost 3 duration	WORD		0...250	min
V5	V5-d3S	35917	38664.0	RW	Weekday defrost 3 end temperature	WORD		-58.0...302	°C/°F
V5	V5-d4H	35918	38664.1	RW	Start time hour weekday defrost 4	WORD		V5-d3H...24	hours
V5	V5-d4n	35919	38664.2	RW	Start time minutes weekday defrost 4	WORD		0...59	min
V5	V5-d4t	35920	38664.3	RW	Weekday defrost 4 duration	WORD		0...250	min
V5	V5-d4S	35921	38664.4	RW	Weekday defrost 4 end temperature	WORD		-58.0...302	°C/°F
V5	V5-d5H	35922	38664.5	RW	Start time hour weekday defrost 5	WORD		V5-d4H...24	hours
V5	V5-d5n	35923	38664.6	RW	Start time minutes weekday defrost 5	WORD		0...59	min
V5	V5-d5t	35924	38664.7	RW	Weekday defrost 5 duration	WORD		0...250	min
V5	V5-d5S	35925	38665.0	RW	Weekday defrost 5 end temperature	WORD		-58.0...302	°C/°F
V5	V5-d6H	35926	38665.1	RW	Start time hour weekday defrost 6	WORD		V5-d5H...24	hours
V5	V5-d6n	35927	38665.2	RW	Start time minutes weekday defrost 6	WORD		0...59	min
V5	V5-d6t	35928	38665.3	RW	Weekday defrost 6 duration	WORD		0...250	min
V5	V5-d6S	35929	38665.4	RW	Weekday defrost 6 end temperature	WORD		-58.0...302	°C/°F
V5	V5-F1H	35930	38665.5	RW	Start time hour weekend/public holiday defrost 1	WORD		0...24	hours
V5	V5-F1n	35931	38665.6	RW	Start time minutes weekend/public holiday defrost 1	WORD		0...59	min
V5	V5-F1t	35932	38665.7	RW	Weekend/public holiday defrost 1 duration	WORD		0...250	min
V5	V5-F1S	35933	38666.0	RW	Weekend defrost 1 end temperature	WORD		-58.0...302	°C/°F
V5	V5-F2H	35934	38666.1	RW	Start time hour weekend/public holiday defrost 2	WORD		V5-F1H...24	hours
V5	V5-F2n	35935	38666.2	RW	Start time minutes weekend/public holiday defrost 2	WORD		0...59	min
V5	V5-F2t	35936	38666.3	RW	Weekend/public holiday defrost 2 duration	WORD		0...250	min
V5	V5-F2S	35937	38666.4	RW	Weekend defrost 1 end temperature	WORD		-58.0...302	°C/°F
V5	V5-F3H	35938	38666.5	RW	Start time hour weekend/public holiday defrost 3	WORD		V5-F2H...24	hours
V5	V5-F3n	35939	38666.6	RW	Start time minutes weekend/public holiday defrost 3	WORD		0...59	min
V5	V5-F3t	35940	38666.7	RW	Weekend/public holiday defrost 3 duration	WORD		0...250	min
V5	V5-F3S	35941	38667.0	RW	Weekend defrost 1 end temperature	WORD		-58.0...302	°C/°F
V5	V5-F4H	35942	38667.1	RW	Start time hour weekend/public holiday defrost 4	WORD		V5-F3H...24	hours
V5	V5-F4n	35943	38667.2	RW	Start time minutes weekend/public holiday defrost 4	WORD		0...59	min
V5	V5-F4t	35944	38667.3	RW	Weekend/public holiday defrost 4 duration	WORD		0...250	min
V5	V5-F4S	35945	38667.4	RW	Weekend defrost 1 end temperature	WORD		-58.0...302	°C/°F
V5	V5-F5H	35946	38667.5	RW	Start time hour weekend/public holiday defrost 5	WORD		V5-F4H...24	hours
V5	V5-F5n	35947	38667.6	RW	Start time minutes weekend/public holiday defrost 5	WORD		0...59	min
V5	V5-F5t	35948	38667.7	RW	Weekend/public holiday defrost 5 duration	WORD		0...250	min
V5	V5-F5S	35949	38668.0	RW	Weekend defrost 1 end temperature	WORD		-58.0...302	°C/°F
V5	V5-F6H	35950	38668.1	RW	Start time hour weekend/public holiday defrost 6	WORD		V5-F5H...24	hours
V5	V5-F6n	35951	38668.2	RW	Start time minutes weekend/public holiday defrost 6	WORD		0...59	min
V5	V5-F6t	35952	38668.3	RW	Weekend/public holiday defrost 6 duration	WORD		0...250	min
V5	V5-F6S	35953	38668.4	RW	Weekend defrost 6 end temperature	WORD		-58.0...302	°C/°F
V5	V5-FP1	36016	38668.5	RW	Evaporator fan probe in normal mode	WORD		0...8	num
V5	V5-FP2	36017	38668.6	RW	Evaporator fan probe during defrost	WORD		0...8	num
V5	V5-FPt	36018	38668.7	RW	FSt parameter mode	WORD		0/1	flag
V5	V5-FSt	36019	38669.0	RW	Fans disabling temperature	WORD		-58.0...302	°C/°F
V5	V5-FAd	36020	38669.1	RW	Fans differential	WORD		0.1...25.0	°C/°F

FOLDER	LABEL	PAR. VALUE ADDR.	VIS PAR. ADDR.	R/W	DESCRIPTION	DATA SIZE	CPL	RANGE	MU
V5	V5-Fdt	36021	38669.2	RW	Fan activation delay from compressor start	WORD		0...250	min
V5	V5-dt	36026	38669.3	RW	Dripping time	WORD		0...250	min
V5	V5-dFd	36024	38669.4	RW	Evaporator fans mode in defrost	WORD		0/1	flag
V5	V5-FCO	36023	38669.5	RW	Evaporator fans mode	WORD		0...3	num
V5	V5-FdC	36025	38669.7	RW	Fan switch-off delay from compressor stoppage	WORD		0...250	min
V5	V5-FOn	36027	38670.0	RW	Fans ON time in duty cycle	WORD		0...250	min
V5	V5-FOF	36028	38670.1	RW	Fans OFF time in duty cycle	WORD		0...250	min
V5	V5-Fnn	36029	38670.2	RW	Duty cycle on time during night mode	WORD		0...250	min
V5	V5-FnF	36030	38670.3	RW	Duty cycle off time during night mode	WORD		0...250	min
V5	V5-rA1	36044	38670.4	RW	Temperature alarm probe 1 selection	WORD		0...7	num
V5	V5-rA2	36045	38670.5	RW	Temperature alarm probe 2 selection	WORD		0...7	num
V5	V5-Att	36046	38670.6	RW	HAL and LAL parameter mode	WORD		0/1	flag
V5	V5-AFd	36047	38670.7	RW	Alarm setpoint differential	WORD		0.1...25.0	°C/°F
V5	V5-HA1	36048	38671.0	RW	Probe 1 maximum alarm	WORD		V5-LA1...302	°C/°F
V5	V5-LA1	36049	38671.1	RW	Probe 1 minimum alarm	WORD		-58.0...V5-HA1	°C/°F
V5	V5-HA2	36050	38671.2	RW	Probe 2 maximum alarm	WORD		V5-LA2...302	°C/°F
V5	V5-LA2	36051	38671.3	RW	Probe 2 minimum alarm	WORD		-58.0...V5-HA2	°C/°F
V5	V5-PAO	36052	38671.4	RW	Alarm exclusion at power-on	WORD		0...10	hours
V5	V5-dAO	36054	38671.5	RW	Alarm exclusion after defrost	WORD		0...250	min
V5	V5-OAO	36053	38671.6	RW	Alarm signalling delay from door closure	WORD		0...10	hours
V5	V5-tdO	36098	38671.7	RW	Open door disabling time	WORD		0...250	num
V5	V5-tA1	36055	38672.0	RW	Alarm LA1 and HA1 signalling delay time	WORD		0...250	min
V5	V5-tA2	36056	38672.1	RW	Alarm LA2 and HA2 signalling delay time	WORD		0...250	min
V5	V5-dAt	36014	38672.2	RW	Enable alarm at end of defrost	WORD		0/1	flag
V5	V5-EAL	36058	38672.3	RW	External alarm switches off loads	WORD		0/1/2	num
V5	V5-tP	36099	38672.4	RW	Enable all keys to acknowledge an alarm	WORD		0/1	flag
V5	V5-Art	36043	38672.5	RW	Link supervision alarm activation period	WORD		0...250	min*10
V5	V5-dSd	36040	38672.6	RW	Enable light relay from door switch	WORD		0/1	flag
V5	V5-dLt	36041	38672.7	RW	Light relay deactivation delay	WORD		0...250	min
V5	V5-OFL	36042	38673.0	RW	Light key always disables light relay	WORD		0/1	flag
V5	V5-dOd	36057	38673.1	RW	Door switch switches off loads	WORD		0...3	num
V5	V5-dOA	36059	38673.2	RW	Action forced by digital input	WORD		0...5	num
V5	V5-PEA	36060	38673.3	RW	Select DI for lock/unlock resources function	WORD		0...3	num
V5	V5-dCO	36061	38673.4	RW	Evaporator fan compressor activation/switch-off delay	WORD		0...250	min
V5	V5-dFO	36062	38673.5	RW	Evaporator fan activation/switch-off delay	WORD		0...250	min
V5	V5-ASb	36088	38673.6	RW	AUX/Light active in OFF key/input	WORD		0/1	flag
V5	V5-L00	35840	38673.7	RW	Probe sharing	WORD		0...7	num
V5	V5-L01	35841	38674.0	RW	Displayed value sharing	WORD		0/1/2	num
V5	V5-L02	35842	38674.1	RW	Send Setpoint value when modified	WORD		0/1	flag
V5	V5-L03	35843	38674.2	RW	Send defrost request	WORD		0/1/2	num
V5	V5-L04	35844	38674.3	RW	End defrost mode	WORD		0/1	flag
V5	V5-L05	35845	38674.4	RW	Standby command synchronisation	WORD		0/1	flag
V5	V5-L06	35846	38674.5	RW	Lights command synchronisation	WORD		0/1	flag
V5	V5-L07	35847	38674.6	RW	Reduced setpoint command synchronisation	WORD		0/1	flag
V5	V5-L08	35848	38674.7	RW	AUX command synchronisation	WORD		0/1	flag
V5	V5-L09	35849	38675.0	RW	Share saturation probe (pressure)	WORD		0/1	flag
V5	V5-L10	36100	38675.1	RW	Timeout waiting for end of dependent defrosts	WORD		0...250	min
V5	V5-L11	35850	38692.2	RW	Number of devices connected in Link^2 for alarm	WORD		0...8	min
V5	V5-L12	35851	38692.3	RW	Alarm sharing	WORD		0/1/2	min
V5	V5-dcS	36034	38675.4	RW	Deep Cooling setpoint	WORD		-58.0...302	°C/°F
V5	V5-tdc	36035	38675.5	RW	Deep Cooling Duration	WORD		0...250	min
V5	V5-dcc	36036	38675.6	RW	Wait for defrost cycle start	WORD		0...250	min
V5	V5-ESt	35963	38675.7	RW	Type of Energy Saving	WORD		0...4	num
V5	V5-ESF	36031	38676.0	RW	Night activation mode	WORD		0/1	flag
V5	V5-Cdt	36032	38676.1	RW	Min. door closing time for reduced set activation	WORD		0...255	min*10

FOLDER	LABEL	PAR. VALUE ADDR.	VIS PAR. ADDR.	R/W	DESCRIPTION	DATA SIZE	CPL	RANGE	MU
V5	V5-ESo	36033	38676.2	RW	Open door cumulative time	WORD		0...10	num
V5	V5-OS1	35980	38676.3	RW	Offset SP1	WORD		-50.0...50.0	°C/°F
V5	V5-OS2	35981	38676.4	RW	Offset SP2	WORD		-50.0...50.0	°C/°F
V5	V5-Od1	35982	38676.5	RW	Offset energy saving door 1	WORD		-50.0...50.0	°C/°F
V5	V5-Od2	35983	38676.6	RW	Offset energy saving door 2	WORD		-50.0...50.0	°C/°F
V5	V5-dn1	35971	38676.7	RW	dn1 Differential in energy saving mode 1	WORD		-58.0...302	°C/°F
V5	V5-dn2	35972	38677.0	RW	dn2 Differential in energy saving mode 2	WORD		-58.0...302	°C/°F
V5	V5-EdH	35957	38677.1	RW	Weekday Energy Saving start hour	WORD		0...24	hours
V5	V5-Edn	35958	38677.2	RW	Weekday Energy Saving start minutes	WORD		0...59	min
V5	V5-Edd	35959	38677.3	RW	Weekday Energy Saving duration	WORD		1...72	hours
V5	V5-EFH	35960	38677.4	RW	Weekend Energy Saving start hour	WORD		0...24	hours
V5	V5-EFn	35961	38677.5	RW	Weekend Energy Saving start minutes	WORD		0...59	min
V5	V5-EFd	35962	38677.6	RW	Weekend Energy Saving duration	WORD		1...72	hours
V5	V5-FH	36063	38677.7	RW	Regulation mode	WORD		0...8	num
V5	V5-FHt	36065	38678.0	RW	Frame Heater period	WORD		1...2500	s*10
V5	V5-FH0	36066	38678.1	RW	Frame Heater setpoint	WORD		-58.0...302	°C/°F
V5	V5-FH1	36067	38678.2	RW	Frame Heater offset	WORD		0.0...25.0	°C/°F
V5	V5-FH2	36068	38678.3	RW	Frame Heater range	WORD		-58.0...302	°C/°F
V5	V5-FH3	36069	38678.4	RW	Min percentage	WORD		0...100	%
V5	V5-FH4	36070	38678.5	RW	Maximum percentage/Duty Cycle Day	WORD		0...100	%
V5	V5-FH5	36071	38678.6	RW	Maximum percentage/Duty Cycle Night (ES)	WORD		0...100	%
V5	V5-FH6	36072	38678.7	RW	Percentage during defrost	WORD		0...100	%
V5	V5-LOC	36075	38679.0	RW	Keypad lock	WORD		0/1	flag
V5	V5-PS1	36076	38679.1	RW	Password 1	WORD		0...250	num
V5	V5-PS2	36077	38679.2	RW	Password 2	WORD		0...250	num
V5	V5-ndt	36078	38679.3	RW	Display with decimal point	WORD		0/1	flag
V5	V5-CA1	35884	38679.4	RW	Calibration Pb1	WORD		-30.0...30.0	°C/°F
V5	V5-CA2	35885	38679.5	RW	Calibration Pb2	WORD		-30.0...30.0	°C/°F
V5	V5-CA3	35886	38679.6	RW	Calibration Pb3	WORD		-30.0...30.0	°C/°F
V5	V5-CA4	35887	38679.7	RW	Calibration Pb4	WORD		-30.0...30.0	°C/°F
V5	V5-CA5	35888	38680.0	RW	Calibration Pb5	WORD		-30.0...30.0	°C/°F
V5	V5-CA6	35889	38680.1	RW	Calibration Pb6	WORD		-30.0...30.0	bar/Psi
V5	V5-CA7	35890	38680.2	RW	Calibration Pb7	WORD		-30.0...30.0	bar/Psi
V5	V5-LdL	36079	38680.3	RW	Minimum possible value	WORD		-58.0...V5-HdL	°C/°F
V5	V5-HdL	36080	38680.4	RW	Maximum possible value.	WORD		V5-LdL...302	°C/°F
V5	V5-ddL	36081	38680.5	RW	Lock display during defrost	WORD		0/1/2	num
V5	V5-Ldd	36082	38680.6	RW	Unlock timeout “ddL”	WORD		0...250	min
V5	V5-dro	36083	38680.7	RW	°C/°F selection. (0=°C, 1=°F)	WORD		0/1	flag
V5	V5-SbP	36084	38681.0	RW	Bar/Psi selection	WORD		0/1	flag
V5	V5-ddd	36085	38681.1	RW	Main Display	WORD		0...8	num
V5	V5-ddE	36086	38681.2	RW	Fundamental display on ECHO	WORD		0...8	num
V5	V5-rPH	36037	38681.3	RW	HACCP alarm probe selection	WORD		0...5	num
V5	V5-H00	35852	38681.4	RW	Type of Pb1-Pb2-Pb3-Pb4 -Pb5 probes (0=NTC, 1=PTC, 2=Pt1000)	WORD		0/1/2	num
V5	V5-H02	36087	38681.5	RW	Key activation time	WORD		0...250	s
V5	V5-H08	36089	38681.6	RW	Stand-by mode	WORD		0/1/2	num
V5	V5-H11	35855	38681.7	RW	DI1 input configuration	WORD		-17...17	num
V5	V5-H12	35856	38682.0	RW	DI2 input configuration	WORD		-17...17	num
V5	V5-H13	35857	38682.1	RW	DI3 input configuration	WORD		-17...17	num
V5	V5-H14	35858	38682.2	RW	DI4 input configuration	WORD		-17...17	num
V5	V5-H15	35859	38682.3	RW	DI5 input configuration	WORD		-17...17	num
V5	V5-H16	35860	38682.4	RW	DI6 input configuration	WORD		-17...17	num
V5	V5-H17	35961	38682.5	RW	DI7 input configuration	WORD		-17...17	num
V5	V5-H18	35962	38682.6	RW	DI8 input configuration	WORD		-17...17	num
V5	V5-dti	35871	38682.7	RW	Unit of measurement for digital input 1 and 2	WORD		0/1	num
V5	V5-d11	35863	38683.0	RW	DI activation signalling delay	WORD		0...255	min/dti

FOLDER	LABEL	PAR. VALUE ADDR.	VIS PAR. ADDR.	R/W	DESCRIPTION	DATA SIZE	CPL	RANGE	MU
V5	V5-d12	35864	38683.1	RW	DI2 activation signalling delay	WORD		0...255	min/dti
V5	V5-d13	35865	38683.2	RW	DI3 activation signalling delay	WORD		0...255	min
V5	V5-d14	35866	38683.3	RW	DI4 activation signalling delay	WORD		0...255	min
V5	V5-d15	35867	38683.4	RW	DI5 activation signalling delay	WORD		0...255	min
V5	V5-d16	35868	38683.5	RW	DI6 activation signalling delay	WORD		0...255	min
V5	V5-d17	35869	38683.6	RW	DI7 activation signalling delay	WORD		0...255	min
V5	V5-d18	35870	38683.7	RW	DI8 activation signalling delay	WORD		0...255	min
V5	V5-H21	35892	38684.0	RW	Configurability of digital output 1	WORD		0...14	num
V5	V5-H22	35893	38684.1	RW	Configurability of digital output 2	WORD		0...14	num
V5	V5-H23	35894	38684.2	RW	Configurability of digital output 3	WORD		0...14	num
V5	V5-H24	35895	38684.3	RW	Configurability of digital output 4	WORD		0...14	num
V5	V5-H25	35896	38684.4	RW	Configurability of digital output 5	WORD		0...14	num
V5	V5-H27	35898	38684.6	RW	Configurability of digital output 7	WORD		0...14	num
V5	V5-H29	35899	38684.7	RW	Enable buzzer	WORD		0/1	flag
V5	V5-H31	36090	38685.0	RW	Configuration of UP key	WORD		0...9	num
V5	V5-H32	36091	38685.1	RW	Configuration of DOWN key	WORD		0...9	num
V5	V5-H33	36092	38685.2	RW	ESC key configuration	WORD		0...9	num
V5	V5-H34	36093	38685.3	RW	FREE 1 key configuration	WORD		0...9	num
V5	V5-H35	36094	38685.4	RW	FREE 2 key configuration	WORD		0...9	num
V5	V5-H36	36095	38685.5	RW	FREE 3 key configuration	WORD		0...9	num
V5	V5-H37	36096	38685.6	RW	FREE 4 key configuration	WORD		0...9	num
V5	V5-H41	35872	38685.7	RW	Pb1 input configuration (0=Disable, 1=DI, 2=H00)	WORD		0/1/2	num
V5	V5-H42	35873	38686.0	RW	Pb2 input configuration (0=Disable, 1=DI, 2=H00)	WORD		0/1/2	num
V5	V5-H43	35874	38686.1	RW	Pb3 input configuration (0=Disable, 1=DI, 2=H00)	WORD		0/1/2	num
V5	V5-H44	35875	38686.2	RW	Pb4 input configuration (0=Disable, 1=DI, 2=H00)	WORD		0/1/2	num
V5	V5-H45	35876	38686.3	RW	Pb5 input configuration (0=Disable, 1=DI, 2=H00)	WORD		0/1/2	num
V5	V5-H46	35877	38686.4	RW	Pb6 input configuration (0=Disable, 1=DI, 2=4-20 mA)	WORD		0/1/2	num
V5	V5-H47	35878	38686.5	RW	Pb7 input configuration (0=Disable, 1=DI, 2=Ratio)	WORD		0/1/2	num
V5	V5-H50	35900	38686.6	RW	Configuration of analogue output type	WORD		0/1	flag
V5	V5-H51	35901	38686.7	RW	Regulator linked to analogue output	WORD		0/1/2	num
V5	V5-H68	35902	38687.0	RW	Clock presence	WORD		0/1	flag
V5	V5-H70	35880	38687.1	RW	Selection of probe 1 for virtual probe	WORD		0...5	num
V5	V5-H71	35881	38687.2	RW	Selection of probe 2 for virtual probe	WORD		0...5	num
V5	V5-H72	35882	38687.3	RW	% calculation virtual probe day	WORD		0...100	%
V5	V5-H73	35883	38687.4	RW	% calculation virtual probe night	WORD		0...100	%
V5	V5-H74	36112	38691.7	RW	Sensor 1 selection for virtual filtered sensor	WORD		0...6	num
V5	V5-H75	36113	38692.0	RW	Thousandth of input signal to the virtual filtered sensor	WORD		1...1000	num
V5	V5-H76	36114	38692.1	RW	Offset virtual filtered sensor	WORD		-999.9...999.9	num
V5	V5-Ety	36097	38687,5	RW	Electronic expansion valve driver selection	WORD		0/1	num
V5	V5-UL	---	38690.0	RW	Visibility of parameter transfer function (Device -> UNICARD/MFK)	2 BIT		0...3	num
V5	V5-dL	---	38690.1	RW	Visibility of parameter transfer function (UNICARD/MFK -> Device)	2 BIT		0...3	num
V5	V5-Fr	---	38690.2	RW	UNICARD/MFK formatting function visibility	2 BIT		0...3	num
APPLICATION 6 PARAMETERS									
V6	V6-rE	36348	38752.0	RW	Regulation mode	WORD		0...5	num
V6	V6-rP1	36349	38752.1	RW	Control probe 1	WORD		0...8	num
V6	V6-rP2	36350	38752.2	RW	Thermostat 2 regulation probe	WORD		0...8	num
V6	V6-SP1	36351	38752.3	RW	Setpoint	WORD		V6-LS1...V6-HS1	°C/°F

FOLDER	LABEL	PAR. VALUE ADDR.	VIS PAR. ADDR.	R/W	DESCRIPTION	DATA SIZE	CPL	RANGE	MU
V6	V6-dF1	36352	38752.4	RW	Differential/proportional band	WORD		-58.0...302	°C/°F
V6	V6-SP2	36353	38752.5	RW	Setpoint according to thermostat	WORD		V6-LS2...V6-HS2	°C/°F
V6	V6-dF2	36354	38752.6	RW	Differential according to thermostat	WORD		-58.0...302	°C/°F
V6	V6-Stt	36357	38752.7	RW	Differential control mode	WORD		0/1	flag
V6	V6-HS1	36360	38753.0	RW	Maximum SP1 value	WORD		V6-LS1...V6-HdL	°C/°F
V6	V6-LS1	36361	38753.1	RW	Minimum SP1 value	WORD		V6-LdL...V6-HS1	°C/°F
V6	V6-HS2	36362	38753.2	RW	Maximum SP2 value	WORD		V6-LS2...V6-HdL	°C/°F
V6	V6-LS2	36363	38753.3	RW	Minimum SP2 value	WORD		V6-LdL...V6-HS2	°C/°F
V6	V6-HC1	36358	38753.4	RW	Thermostat mode 1	WORD		0/1	flag
V6	V6-HC2	36359	38753.5	RW	Thermostat mode 2	WORD		0/1	flag
V6	V6-Cit	36368	38753.7	RW	Minimum compressor ON time	WORD		0...250	min
V6	V6-CAt	36369	38754.0	RW	Maximum compressor ON time	WORD		0...250	min
V6	V6-Ont	36374	38754.1	RW	Probe error ON time	WORD		0...250	min
V6	V6-OFt	36375	38754.2	RW	Probe error OFF time	WORD		0...250	min
V6	V6-dOn	36370	38754.3	RW	Delayed start	WORD		0...250	s
V6	V6-dOF	36371	38754.4	RW	Delay after switching off	WORD		0...250	min
V6	V6-dbi	36372	38754.5	RW	Time lag between starts	WORD		0...250	min
V6	V6-OdO	36373	38754.6	RW	Output delay from power-on	WORD		0...250	min
V6	V6-OF1	36379	38755.3	RW	Forced remote offset	WORD		-50.0...50.0	°C/°F
V6	V6-SS1	36486	38786.4	RW	Compressor Softstart: hotgas valve opening advance	WORD		0...250	s
V6	V6-SS2	36487	38786.5	RW	Compressor Softstart: hotgas valve opening delay	WORD		0...250	s
V6	V6-dP1	36380	38755.4	RW	Defrost probe 1 selection	WORD		0...8	num
V6	V6-dP2	36381	38755.5	RW	Defrost probe 2 selection	WORD		0...8	num
V6	V6-dtY	36384	38755.6	RW	Defrost mode	WORD		0...4	num
V6	V6-dFt	36382	38755.7	RW	Defrost activation mode with two probes	WORD		0/1/2	num
V6	V6-dit	36385	38756.0	RW	Interval between defrost cycles	WORD		0...250	hours/dt1
V6	V6-dt1	36388	38756.1	RW	Unit of measurement for defrost interval	WORD		0/1/2	num
V6	V6-dt2	36389	38756.2	RW	Unit of measurement for defrost duration	WORD		0/1/2	num
V6	V6-dCt	36383	38756.3	RW	Defrost interval count mode	WORD		0...5	num
V6	V6-dOH	36390	38756.4	RW	Defrost interval count mode	WORD		0...250	min
V6	V6-dE1	36386	38756.5	RW	Evaporator 1 defrost timeout	WORD		1...250	min/dt2
V6	V6-dE2	36387	38756.6	RW	Evaporator 2 defrost timeout	WORD		1...250	min/dt2
V6	V6-dS1	36392	38756.7	RW	Probe 1 defrost end temperature	WORD		-58.0...302	°C/°F
V6	V6-dS2	36393	38757.0	RW	Probe 2 defrost end temperature	WORD		-58.0...302	°C/°F
V6	V6-dSS	36391	38757.1	RW	Start defrost temperature threshold	WORD		-58.0...302	°C/°F
V6	V6-dPO	36394	38757.2	RW	Defrost activation request from power-on	WORD		0/1	flag
V6	V6-tcd	36395	38757.3	RW	Minimum compressor ON or OFF time before defrost	WORD		-60...60	min
V6	V6-ndE	36396	38757.4	RW	Minimum defrost time (hot gas only)	WORD		0...250	min
V6	V6-PdC	36397	38757.5	RW	Hot gas extraction time at defrost end	WORD		0...250	min
V6	V6-tPd	36399	38757.6	RW	Pump down time before defrost startup	WORD		0...255	min
V6	V6-dPH	36338	38757.7	RW	Periodic start defrost hour	WORD		0...24	hours
V6	V6-dPn	36339	38758.0	RW	Periodic start defrost minutes	WORD		0...59	min
V6	V6-dPd	36340	38758.1	RW	Regular defrost interval duration	WORD		1...7	day
V6	V6-Fd1	36287	38758.2	RW	Weekend/public holiday 1	WORD		0...7	num
V6	V6-Fd2	36288	38758.3	RW	Weekend/public holiday 2	WORD		0...7	num
V6	V6-Edt	36289	38758.4	RW	Custom duration and temperature for each event	WORD		0/1	flag
V6	V6-d1H	36290	38758.5	RW	Start time hour weekday defrost 1	WORD		0...24	hours
V6	V6-d1n	36291	38758.6	RW	Start time minutes weekday defrost 1	WORD		0...59	min
V6	V6-d1t	36292	38758.7	RW	Weekday defrost 1 duration	WORD		0...250	min
V6	V6-d1S	36293	38759.0	RW	Weekday defrost 1 end temperature	WORD		-58.0...302	°C/°F
V6	V6-d2H	36294	38759.1	RW	Start time hour weekday defrost 2	WORD		V6-d1H...24	hours
V6	V6-d2n	36295	38759.2	RW	Start time minutes weekday defrost 2	WORD		0...59	min
V6	V6-d2t	36296	38759.3	RW	Weekday defrost 2 duration	WORD		0...250	min
V6	V6-d2S	36297	38759.4	RW	Weekday defrost 2 end temperature	WORD		-58.0...302	°C/°F
V6	V6-d3H	36298	38759.5	RW	Start time hour weekday defrost 3	WORD		V6-d2H...24	hours

FOLDER	LABEL	PAR. VALUE ADDR.	VIS PAR. ADDR.	R/W	DESCRIPTION	DATA SIZE	CPL	RANGE	MU
V6	V6-d3n	36299	38759.6	RW	Start time minutes weekday defrost 3	WORD		0...59	min
V6	V6-d3t	36300	38759.7	RW	Weekday defrost 3 duration	WORD		0...250	min
V6	V6-d3S	36301	38760.0	RW	Weekday defrost 3 end temperature	WORD		-58.0...302	°C/°F
V6	V6-d4H	36302	38760.1	RW	Start time hour weekday defrost 4	WORD		V6-d3H...24	hours
V6	V6-d4n	36303	38760.2	RW	Start time minutes weekday defrost 4	WORD		0...59	min
V6	V6-d4t	36304	38760.3	RW	Weekday defrost 4 duration	WORD		0...250	min
V6	V6-d4S	36305	38760.4	RW	Weekday defrost 4 end temperature	WORD		-58.0...302	°C/°F
V6	V6-d5H	36306	38760.5	RW	Start time hour weekday defrost 5	WORD		V6-d4H...24	hours
V6	V6-d5n	36307	38760.6	RW	Start time minutes weekday defrost 5	WORD		0...59	min
V6	V6-d5t	36308	38760.7	RW	Weekday defrost 5 duration	WORD		0...250	min
V6	V6-d5S	36309	38761.0	RW	Weekday defrost 5 end temperature	WORD		-58.0...302	°C/°F
V6	V6-d6H	36310	38761.1	RW	Start time hour weekday defrost 6	WORD		V6-d5H...24	hours
V6	V6-d6n	36311	38761.2	RW	Start time minutes weekday defrost 6	WORD		0...59	min
V6	V6-d6t	36312	38761.3	RW	Weekday defrost 6 duration	WORD		0...250	min
V6	V6-d6S	36313	38761.4	RW	Weekday defrost 6 end temperature	WORD		-58.0...302	°C/°F
V6	V6-F1H	36314	38761.5	RW	Start time hour weekend/public holiday defrost 1	WORD		0...24	hours
V6	V6-F1n	36315	38761.6	RW	Start time minutes weekend/public holiday defrost 1	WORD		0...59	min
V6	V6-F1t	36316	38761.7	RW	Weekend/public holiday defrost 1 duration	WORD		0...250	min
V6	V6-F1S	36317	38762.0	RW	Weekend defrost 1 end temperature	WORD		-58.0...302	°C/°F
V6	V6-F2H	36318	38762.1	RW	Start time hour weekend/public holiday defrost 2	WORD		V6-F1H...24	hours
V6	V6-F2n	36319	38762.2	RW	Start time minutes weekend/public holiday defrost 2	WORD		0...59	min
V6	V6-F2t	36320	38762.3	RW	Weekend/public holiday defrost 2 duration	WORD		0...250	min
V6	V6-F2S	36321	38762.4	RW	Weekend defrost 1 end temperature	WORD		-58.0...302	°C/°F
V6	V6-F3H	36322	38762.5	RW	Start time hour weekend/public holiday defrost 3	WORD		V6-F2H...24	hours
V6	V6-F3n	36323	38762.6	RW	Start time minutes weekend/public holiday defrost 3	WORD		0...59	min
V6	V6-F3t	36324	38762.7	RW	Weekend/public holiday defrost 3 duration	WORD		0...250	min
V6	V6-F3S	36325	38763.0	RW	Weekend defrost 1 end temperature	WORD		-58.0...302	°C/°F
V6	V6-F4H	36326	38763.1	RW	Start time hour weekend/public holiday defrost 4	WORD		V6-F3H...24	hours
V6	V6-F4n	36327	38763.2	RW	Start time minutes weekend/public holiday defrost 4	WORD		0...59	min
V6	V6-F4t	36328	38763.3	RW	Weekend/public holiday defrost 4 duration	WORD		0...250	min
V6	V6-F4S	36329	38763.4	RW	Weekend defrost 1 end temperature	WORD		-58.0...302	°C/°F
V6	V6-F5H	36330	38763.5	RW	Start time hour weekend/public holiday defrost 5	WORD		V6-F4H...24	hours
V6	V6-F5n	36331	38763.6	RW	Start time minutes weekend/public holiday defrost 5	WORD		0...59	min
V6	V6-F5t	36332	38763.7	RW	Weekend/public holiday defrost 5 duration	WORD		0...250	min
V6	V6-F5S	36333	38764.0	RW	Weekend defrost 1 end temperature	WORD		-58.0...302	°C/°F
V6	V6-F6H	36334	38764.1	RW	Start time hour weekend/public holiday defrost 6	WORD		V6-F5H...24	hours
V6	V6-F6n	36335	38764.2	RW	Start time minutes weekend/public holiday defrost 6	WORD		0...59	min
V6	V6-F6t	36336	38764.3	RW	Weekend/public holiday defrost 6 duration	WORD		0...250	min
V6	V6-F6S	36337	38764.4	RW	Weekend defrost 6 end temperature	WORD		-58.0...302	°C/°F
V6	V6-FP1	36400	38764.5	RW	Evaporator fan probe in normal mode	WORD		0...8	num
V6	V6-FP2	36401	38764.6	RW	Evaporator fan probe during defrost	WORD		0...8	num
V6	V6-FPt	36402	38764.7	RW	FSt parameter mode	WORD		0/1	flag
V6	V6-FSt	36403	38765.0	RW	Fans disabling temperature	WORD		-58.0...302	°C/°F
V6	V6-FAd	36404	38765.1	RW	Fans differential	WORD		0.1...25.0	°C/°F
V6	V6-Fdt	36405	38765.2	RW	Fan activation delay from compressor start	WORD		0...250	min
V6	V6-dt	36410	38765.3	RW	Dripping time	WORD		0...250	min
V6	V6-dFd	36408	38765.4	RW	Evaporator fans mode in defrost	WORD		0/1	flag
V6	V6-FCO	36407	38765.5	RW	Evaporator fans mode	WORD		0...3	num
V6	V6-FdC	36406	38765.7	RW	Fan switch-off delay from compressor stoppage	WORD		0...250	min
V6	V6-FOn	36411	38766.0	RW	Fans ON time in duty cycle	WORD		0...250	min
V6	V6-FOF	36412	38766.1	RW	Fans OFF time in duty cycle	WORD		0...250	min
V6	V6-Fnn	36413	38766.2	RW	Duty cycle on time during night mode	WORD		0...250	min
V6	V6-FnF	36414	38766.3	RW	Duty cycle off time during night mode	WORD		0...250	min
V6	V6-rA1	36428	38766.4	RW	Temperature alarm probe 1 selection	WORD		0...7	num
V6	V6-rA2	36429	38766.5	RW	Temperature alarm probe 2 selection	WORD		0...7	num

FOLDER	LABEL	PAR. VALUE ADDR.	VIS PAR. ADDR.	R/W	DESCRIPTION	DATA SIZE	CPL	RANGE	MU
V6	V6-Att	36430	38766.6	RW	HAL and LAL parameter mode	WORD		0/1	flag
V6	V6-AFd	36431	38766.7	RW	Alarm setpoint differential	WORD		0.1...25.0	°C/°F
V6	V6-HA1	36432	38767.0	RW	Probe 1 maximum alarm	WORD		V6-LA1...302	°C/°F
V6	V6-LA1	36433	38767.1	RW	Probe 1 minimum alarm	WORD		-58.0...V6-HA1	°C/°F
V6	V6-HA2	36434	38767.2	RW	Probe 2 maximum alarm	WORD		V6-LA2...302	°C/°F
V6	V6-LA2	36345	38767.3	RW	Probe 2 minimum alarm	WORD		-58.0...V6-HA2	°C/°F
V6	V6-PAO	36436	38767.4	RW	Alarm exclusion at power-on	WORD		0...10	hours
V6	V6-dAO	36438	38767.5	RW	Alarm exclusion after defrost	WORD		0...250	min
V6	V6-OAO	36437	38767.6	RW	Alarm signalling delay from door closure	WORD		0...10	hours
V6	V6-tdO	36482	38767.7	RW	Open door disabling time	WORD		0...250	num
V6	V6-tA1	36439	38768.0	RW	Alarm LA1 and HA1 signalling delay time	WORD		0...250	min
V6	V6-tA2	36440	38768.1	RW	Alarm LA2 and HA2 signalling delay time	WORD		0...250	min
V6	V6-dAt	36398	38768.2	RW	Enable alarm at end of defrost	WORD		0/1	flag
V6	V6-EAL	36442	38768.3	RW	External alarm switches off loads	WORD		0/1/2	num
V6	V6-tP	36483	38768.4	RW	Enable all keys to acknowledge an alarm	WORD		0/1	flag
V6	V6-Art	36427	38768.5	RW	Link supervision alarm activation period	WORD		0...250	min*10
V6	V6-dSd	36424	38768.6	RW	Enable light relay from door switch	WORD		0/1	flag
V6	V6-dLt	36425	38768.7	RW	Light relay deactivation delay	WORD		0...250	min
V6	V6-OFL	36426	38769.0	RW	Light key always disables light relay	WORD		0/1	flag
V6	V6-dOd	36441	38769.1	RW	Door switch switches off loads	WORD		0...3	num
V6	V6-dOA	36443	38769.2	RW	Action forced by digital input	WORD		0...5	num
V6	V6-PEA	36444	38769.3	RW	Select DI for lock/unlock resources function	WORD		0...3	num
V6	V6-dCO	36445	38769.4	RW	Evaporator fan compressor activation/switch-off delay	WORD		0...250	min
V6	V6-dFO	36446	38769.5	RW	Evaporator fan activation/switch-off delay	WORD		0...250	min
V6	V6-ASb	36472	38769.6	RW	AUX/Light active in OFF key/input	WORD		0/1	flag
V6	V6-L00	36224	38769.7	RW	Probe sharing	WORD		0...7	num
V6	V6-L01	36225	38770.0	RW	Displayed value sharing	WORD		0/1/2	num
V6	V6-L02	36226	38770.1	RW	Send Setpoint value when modified	WORD		0/1	flag
V6	V6-L03	36227	38770.2	RW	Send defrost request	WORD		0/1/2	num
V6	V6-L04	36228	38770.3	RW	End defrost mode	WORD		0/1	flag
V6	V6-L05	36229	38770.4	RW	Standby command synchronisation	WORD		0/1	flag
V6	V6-L06	36230	38770.5	RW	Lights command synchronisation	WORD		0/1	flag
V6	V6-L07	36231	38770.6	RW	Reduced setpoint command synchronisation	WORD		0/1	flag
V6	V6-L08	36232	38770.7	RW	AUX command synchronisation	WORD		0/1	flag
V6	V6-L09	36233	38771.0	RW	Share saturation probe (pressure)	WORD		0/1	flag
V6	V6-L10	36484	38771.1	RW	Timeout waiting for end of dependent defrosts	WORD		0...250	min
V6	V6-L11	36234	38788.2	RW	Number of devices connected in Link² for alarm	WORD		0...8	min
V6	V6-L12	36235	38788.3	RW	Alarm sharing	WORD		0/1/2	min
V6	V6-dcS	36418	38771.4	RW	Deep Cooling setpoint	WORD		-58.0...302	°C/°F
V6	V6-tdc	36419	38771.5	RW	Deep Cooling Duration	WORD		0...250	min
V6	V6-dcc	36420	38771.6	RW	Wait for defrost cycle start	WORD		0...250	min
V6	V6-ESt	36347	38771.7	RW	Type of Energy Saving	WORD		0...4	num
V6	V6-ESF	36415	38772.0	RW	Night activation mode	WORD		0/1	flag
V6	V6-Cdt	36416	38772.1	RW	Min. door closing time for reduced set activation	WORD		0...255	min*10
V6	V6-ESo	36417	38772.2	RW	Open door cumulative time	WORD		0...10	num
V6	V6-OS1	36364	38772.3	RW	Offset SP1	WORD		-50.0...50.0	°C/°F
V6	V6-OS2	36365	38772.4	RW	Offset SP2	WORD		-50.0...50.0	°C/°F
V6	V6-Od1	36366	38772.5	RW	Offset energy saving door 1	WORD		-50.0...50.0	°C/°F
V6	V6-Od2	36367	38772.6	RW	Offset energy saving door 2	WORD		-50.0...50.0	°C/°F
V6	V6-dn1	36355	38772.7	RW	dn1 Differential in energy saving mode 1	WORD		-58.0...302	°C/°F
V6	V6-dn2	36356	38773.0	RW	dn2 Differential in energy saving mode 2	WORD		-58.0...302	°C/°F
V6	V6-EdH	36341	38773.1	RW	Weekday Energy Saving start hour	WORD		0...24	hours
V6	V6-Edn	36342	38773.2	RW	Weekday Energy Saving start minutes	WORD		0...59	min
V6	V6-Edd	36343	38773.3	RW	Weekday Energy Saving duration	WORD		1...72	hours
V6	V6-EFH	36344	38773.4	RW	Weekend Energy Saving start hour	WORD		0...24	hours

FOLDER	LABEL	PAR. VALUE ADDR.	VIS PAR. ADDR.	R/W	DESCRIPTION	DATA SIZE	CPL	RANGE	MU
V6	V6-EFn	36345	38773.5	RW	Weekend Energy Saving start minutes	WORD		0...59	min
V6	V6-EFd	36346	38773.6	RW	Weekend Energy Saving duration	WORD		1...72	hours
V6	V6-FH	36447	38773.7	RW	Regulation mode	WORD		0...8	num
V6	V6-FHt	36449	38774.0	RW	Frame Heater period	WORD		1...2500	s*10
V6	V6-FH0	36450	38774.1	RW	Frame Heater setpoint	WORD		-58.0...302	°C/°F
V6	V6-FH1	36451	38774.2	RW	Frame Heater offset	WORD		0.0...25.0	°C/°F
V6	V6-FH2	36452	38774.3	RW	Frame Heater range	WORD		-58.0...302	°C/°F
V6	V6-FH3	36453	38774.4	RW	Min percentage	WORD		0...100	%
V6	V6-FH4	36454	38774.5	RW	Maximum percentage/Duty Cycle Day	WORD		0...100	%
V6	V6-FH5	36455	38774.6	RW	Maximum percentage/Duty Cycle Night (ES)	WORD		0...100	%
V6	V6-FH6	36456	38774.7	RW	Percentage during defrost	WORD		0...100	%
V6	V6-LOC	36459	38775.0	RW	Keypad lock	WORD		0/1	flag
V6	V6-PS1	36460	38775.1	RW	Password 1	WORD		0...250	num
V6	V6-PS2	36461	38775.2	RW	Password 2	WORD		0...250	num
V6	V6-ndt	36462	38775.3	RW	Display with decimal point	WORD		0/1	flag
V6	V6-CA1	36268	38775.4	RW	Calibration Pb1	WORD		-30.0...30.0	°C/°F
V6	V6-CA2	36269	38775.5	RW	Calibration Pb2	WORD		-30.0...30.0	°C/°F
V6	V6-CA3	36270	38775.6	RW	Calibration Pb3	WORD		-30.0...30.0	°C/°F
V6	V6-CA4	36271	38775.7	RW	Calibration Pb4	WORD		-30.0...30.0	°C/°F
V6	V6-CA5	36272	38776.0	RW	Calibration Pb5	WORD		-30.0...30.0	°C/°F
V6	V6-CA6	36273	38776.1	RW	Calibration Pb6	WORD		-30.0...30.0	bar/Psi
V6	V6-CA7	36274	38776.2	RW	Calibration Pb7	WORD		-30.0...30.0	bar/Psi
V6	V6-LdL	36463	38776.3	RW	Minimum possible value	WORD		-58.0...V6-HdL	°C/°F
V6	V6-HdL	36464	38776.4	RW	Maximum possible value.	WORD		V6-LdL...302	°C/°F
V6	V6-ddL	36465	38776.5	RW	Lock display during defrost	WORD		0/1/2	num
V6	V6-Ldd	36466	38776.6	RW	Unlock timeout “ddL”	WORD		0...250	min
V6	V6-dro	36467	38776.7	RW	°C/°F selection. (0=°C, 1=°F)	WORD		0/1	flag
V6	V6-SbP	36468	38777.0	RW	Bar/Psi selection	WORD		0/1	flag
V6	V6-ddd	36469	38777.1	RW	Main Display	WORD		0...8	num
V6	V6-ddE	36470	38777.2	RW	Fundamental display on ECHO	WORD		0...8	num
V6	V6-rPH	36421	38777.3	RW	HACCP alarm probe selection	WORD		0...5	num
V6	V6-H00	36236	38777.4	RW	Type of Pb1-Pb2-Pb3-Pb4-Pb5 probes (0=NTC, 1=PTC, 2=Pt1000)	WORD		0/1/2	num
V6	V6-H02	36471	38777.5	RW	Key activation time	WORD		0...250	s
V6	V6-H08	36473	38777.6	RW	Stand-by mode	WORD		0/1/2	num
V6	V6-H11	36239	38777.7	RW	DI1 input configuration	WORD		-17...17	num
V6	V6-H12	36240	38778.0	RW	DI2 input configuration	WORD		-17...17	num
V6	V6-H13	36241	38778.1	RW	DI3 input configuration	WORD		-17...17	num
V6	V6-H14	36242	38778.2	RW	DI4 input configuration	WORD		-17...17	num
V6	V6-H15	36243	38778.3	RW	DI5 input configuration	WORD		-17...17	num
V6	V6-H16	36244	38778.4	RW	DI6 input configuration	WORD		-17...17	num
V6	V6-H17	36245	38778.5	RW	DI7 input configuration	WORD		-17...17	num
V6	V6-H18	36246	38778.6	RW	DI8 input configuration	WORD		-17...17	num
V6	V6-dti	36255	38778.7	RW	Unit of measurement for digital input 1 and 2	WORD		0/1	num
V6	V6-d11	36247	38779.0	RW	DI activation signalling delay	WORD		0...255	min/dti
V6	V6-d12	36248	38779.1	RW	DI2 activation signalling delay	WORD		0...255	min/dti
V6	V6-d13	36249	38779.2	RW	DI3 activation signalling delay	WORD		0...255	min
V6	V6-d14	36250	38779.3	RW	DI4 activation signalling delay	WORD		0...255	min
V6	V6-d15	36251	38779.4	RW	DI5 activation signalling delay	WORD		0...255	min
V6	V6-d16	36252	38779.5	RW	DI6 activation signalling delay	WORD		0...255	min
V6	V6-d17	36253	38779.6	RW	DI7 activation signalling delay	WORD		0...255	min
V6	V6-d18	36254	38779.7	RW	DI8 activation signalling delay	WORD		0...255	min
V6	V6-H21	36276	38780.0	RW	Configurability of digital output 1	WORD		0...14	num
V6	V6-H22	36277	38780.1	RW	Configurability of digital output 2	WORD		0...14	num
V6	V6-H23	36278	38780.2	RW	Configurability of digital output 3	WORD		0...14	num
V6	V6-H24	36279	38780.3	RW	Configurability of digital output 4	WORD		0...14	num

FOLDER	LABEL	PAR. VALUE ADDR.	VIS PAR. ADDR.	R/W	DESCRIPTION	DATA SIZE	CPL	RANGE	MU
V6	V6-H25	36280	38780.4	RW	Configurability of digital output 5	WORD		0...14	num
V6	V6-H27	36282	38780.6	RW	Configurability of digital output 7	WORD		0...14	num
V6	V6-H29	36283	38780.7	RW	Enable buzzer	WORD		0/1	flag
V6	V6-H31	36474	38781.0	RW	Configuration of UP key	WORD		0...9	num
V6	V6-H32	36475	38781.1	RW	Configuration of DOWN key	WORD		0...9	num
V6	V6-H33	36476	38781.2	RW	ESC key configuration	WORD		0...9	num
V6	V6-H34	36477	38781.3	RW	FREE 1 key configuration	WORD		0...9	num
V6	V6-H35	36478	38781.4	RW	FREE 2 key configuration	WORD		0...9	num
V6	V6-H36	36479	38781.5	RW	FREE 3 key configuration	WORD		0...9	num
V6	V6-H37	36480	38781.6	RW	FREE 4 key configuration	WORD		0...9	num
V6	V6-H41	36256	38781.7	RW	Pb1 input configuration (0=Disable, 1=DI, 2=H00)	WORD		0/1/2	num
V6	V6-H42	36257	38782.0	RW	Pb2 input configuration (0=Disable, 1=DI, 2=H00)	WORD		0/1/2	num
V6	V6-H43	36258	38782.1	RW	Pb3 input configuration (0=Disable, 1=DI, 2=H00)	WORD		0/1/2	num
V6	V6-H44	36259	38782.2	RW	Pb4 input configuration (0=Disable, 1=DI, 2=H00)	WORD		0/1/2	num
V6	V6-H45	36260	38782.3	RW	Pb5 input configuration (0=Disable, 1=DI, 2=H00)	WORD		0/1/2	num
V6	V6-H46	36261	38782.4	RW	Pb6 input configuration (0=Disable, 1=DI, 2=4-20 mA)	WORD		0/1/2	num
V6	V6-H47	36262	38782.5	RW	Pb7 input configuration (0=Disable, 1=DI, 2=Ratio)	WORD		0/1/2	num
V6	V6-H50	36284	38782.6	RW	Configuration of analogue output type	WORD		0/1	flag
V6	V6-H51	36285	38782.7	RW	Regulator linked to analogue output	WORD		0/1/2	num
V6	V6-H68	36286	38783.0	RW	Clock presence	WORD		0/1	flag
V6	V6-H70	36264	38783.1	RW	Selection of probe 1 for virtual probe	WORD		0...5	num
V6	V6-H71	36265	38783.2	RW	Selection of probe 2 for virtual probe	WORD		0...5	num
V6	V6-H72	36266	38783.3	RW	% calculation virtual probe day	WORD		0...100	%
V6	V6-H73	36267	38783.4	RW	% calculation virtual probe night	WORD		0...100	%
V6	V6-H74	36496	38787.7	RW	Sensor 1 selection for virtual filtered sensor	WORD		0...6	num
V6	V6-H75	36497	38788.0	RW	Thousandth of input signal to the virtual filtered sensor	WORD		1...1000	num
V6	V6-H76	36498	38788.1	RW	Offset virtual filtered sensor	WORD		-999.9...999.9	num
V6	V6-Ety	36481	38783,5	RW	Electronic expansion valve driver selection	WORD		0/1	num
V6	V6-UL	---	38786.0	RW	Parameter transfer function visibility (Device -> UNICARD/MFK)	2 BIT		0...3	num
V6	V6-dL	---	38786.1	RW	Parameter transfer function visibility (UNICARD/MFK -> Device)	2 BIT		0...3	num
V6	V6-Fr	---	38786.2	RW	UNICARD/MFK formatting function visibility	2 BIT		0...3	num
APPLICATION 7 PARAMETERS									
V7	V7-rE	36732	38848.0	RW	Regulation mode	WORD		0...5	num
V7	V7-rP1	36733	38848.1	RW	Control probe 1	WORD		0...8	num
V7	V7-rP2	36734	38848.2	RW	Thermostat 2 regulation probe	WORD		0...8	num
V7	V7-SP1	36735	38848.3	RW	Setpoint	WORD		V7-LS1...V7-HS1	°C/°F
V7	V7-dF1	36736	38848.4	RW	Differential/proportional band	WORD		-58.0...302	°C/°F
V7	V7-SP2	36737	38848.5	RW	Setpoint according to thermostat	WORD		V7-LS2...V7-HS2	°C/°F
V7	V7-dF2	36738	38848.6	RW	Differential according to thermostat	WORD		-58.0...302	°C/°F
V7	V7-Stt	36741	38848.7	RW	Differential control mode	WORD		0/1	flag
V7	V7-HS1	36744	38849.0	RW	Maximum SP1 value	WORD		V7-LS1...V7-HdL	°C/°F
V7	V7-LS1	36745	38849.1	RW	Minimum SP1 value	WORD		V7-LdL...V7-HS1	°C/°F
V7	V7-HS2	36746	38849.2	RW	Maximum SP2 value	WORD		V7-LS2...V7-HdL	°C/°F
V7	V7-LS2	36747	38849.3	RW	Minimum SP2 value	WORD		V7-LdL...V7-HS2	°C/°F
V7	V7-HC1	36742	38849.4	RW	Thermostat mode 1	WORD		0/1	flag
V7	V7-HC2	36743	38849.5	RW	Thermostat mode 2	WORD		0/1	flag
V7	V7-Cit	36752	38849.7	RW	Minimum compressor ON time	WORD		0...250	min

FOLDER	LABEL	PAR. VALUE ADDR.	VIS PAR. ADDR.	R/W	DESCRIPTION	DATA SIZE	CPL	RANGE	MU
V7	V7-CAt	36753	38850.0	RW	Maximum compressor ON time	WORD		0...250	min
V7	V7-Ont	36758	38850.1	RW	Probe error ON time	WORD		0...250	min
V7	V7-OFt	36759	38850.2	RW	Probe error OFF time	WORD		0...250	min
V7	V7-dOn	36754	38850.3	RW	Delayed start	WORD		0...250	s
V7	V7-dOF	36755	38850.4	RW	Delay after switching off	WORD		0...250	min
V7	V7-dbi	36756	38850.5	RW	Time lag between starts	WORD		0...250	min
V7	V7-OdO	36757	38850.6	RW	Output delay from power-on	WORD		0...250	min
V7	V7-OF1	36763	38851.3	RW	Forced remote offset	WORD		-50.0...50.0	°C/°F
V7	V7-SS1	36870	38882.4	RW	Compressor Softstart: hotgas valve opening advance	WORD		0...250	s
V7	V7-SS2	36871	38882.5	RW	Compressor Softstart: hotgas valve opening delay	WORD		0...250	s
V7	V7-dP1	36764	38851.4	RW	Defrost probe 1 selection	WORD		0...8	num
V7	V7-dP2	36765	38851.5	RW	Defrost probe 2 selection	WORD		0...8	num
V7	V7-dtY	36768	38851.6	RW	Defrost mode	WORD		0...4	num
V7	V7-dFt	36766	38851.7	RW	Defrost activation mode with two probes	WORD		0/1/2	num
V7	V7-dit	36769	38852.0	RW	Interval between defrost cycles	WORD		0...250	hours/ dt1
V7	V7-dt1	36772	38852.1	RW	Unit of measurement for defrost interval	WORD		0/1/2	num
V7	V7-dt2	36773	38852.2	RW	Unit of measurement for defrost duration	WORD		0/1/2	num
V7	V7-dCt	36767	38852.3	RW	Defrost interval count mode	WORD		0...5	num
V7	V7-dOH	36774	38852.4	RW	Defrost interval count mode	WORD		0...250	min
V7	V7-dE1	36770	38852.5	RW	Evaporator 1 defrost timeout	WORD		1...250	min/dt2
V7	V7-dE2	36771	38852.6	RW	Evaporator 2 defrost timeout	WORD		1...250	min/dt2
V7	V7-dS1	36776	38852.7	RW	Probe 1 defrost end temperature	WORD		-58.0...302	°C/°F
V7	V7-dS2	36777	38853.0	RW	Probe 2 defrost end temperature	WORD		-58.0...302	°C/°F
V7	V7-dSS	36775	38853.1	RW	Start defrost temperature threshold	WORD		-58.0...302	°C/°F
V7	V7-dPO	36778	38853.2	RW	Defrost activation request from power-on	WORD		0/1	flag
V7	V7-tcd	36779	38853.3	RW	Minimum compressor ON or OFF time before defrost	WORD		-60...60	min
V7	V7-ndE	36780	38853.4	RW	Minimum defrost time (hot gas only)	WORD		0...250	min
V7	V7-PdC	36781	38853.5	RW	Hot gas extraction time at defrost end	WORD		0...250	min
V7	V7-tPd	36783	38853.6	RW	Pump down time before defrost startup	WORD		0...255	min
V7	V7-dPH	36722	38853.7	RW	Periodic start defrost hour	WORD		0...24	hours
V7	V7-dPn	36723	38854.0	RW	Periodic start defrost minutes	WORD		0...59	min
V7	V7-dPd	36724	38854.1	RW	Regular defrost interval duration	WORD		1...7	day
V7	V7-Fd1	36671	38854.2	RW	Weekend/public holiday 1	WORD		0...7	num
V7	V7-Fd2	36672	38854.3	RW	Weekend/public holiday 2	WORD		0...7	num
V7	V7-Edt	36673	38854.4	RW	Custom duration and temperature for each event	WORD		0/1	flag
V7	V7-d1H	36674	38854.5	RW	Start time hour weekday defrost 1	WORD		0...24	hours
V7	V7-d1n	36675	38854.6	RW	Start time minutes weekday defrost 1	WORD		0...59	min
V7	V7-d1t	36676	38854.7	RW	Weekday defrost 1 duration	WORD		0...250	min
V7	V7-d1S	36677	38855.0	RW	Weekday defrost 1 end temperature	WORD		-58.0...302	°C/°F
V7	V7-d2H	36678	38855.1	RW	Start time hour weekday defrost 2	WORD		V7-d1H...24	hours
V7	V7-d2n	36679	38855.2	RW	Start time minutes weekday defrost 2	WORD		0...59	min
V7	V7-d2t	36680	38855.3	RW	Weekday defrost 2 duration	WORD		0...250	min
V7	V7-d2S	36681	38855.4	RW	Weekday defrost 2 end temperature	WORD		-58.0...302	°C/°F
V7	V7-d3H	36682	38855.5	RW	Start time hour weekday defrost 3	WORD		V7-d2H...24	hours
V7	V7-d3n	36683	38855.6	RW	Start time minutes weekday defrost 3	WORD		0...59	min
V7	V7-d3t	36684	38855.7	RW	Weekday defrost 3 duration	WORD		0...250	min
V7	V7-d3S	36685	38856.0	RW	Weekday defrost 3 end temperature	WORD		-58.0...302	°C/°F
V7	V7-d4H	36686	38856.1	RW	Start time hour weekday defrost 4	WORD		V7-d3H...24	hours
V7	V7-d4n	36687	38856.2	RW	Start time minutes weekday defrost 4	WORD		0...59	min
V7	V7-d4t	36688	38856.3	RW	Weekday defrost 4 duration	WORD		0...250	min
V7	V7-d4S	36689	38856.4	RW	Weekday defrost 4 end temperature	WORD		-58.0...302	°C/°F
V7	V7-d5H	36690	38856.5	RW	Start time hour weekday defrost 5	WORD		V7-d4H...24	hours
V7	V7-d5n	36691	38856.6	RW	Start time minutes weekday defrost 5	WORD		0...59	min
V7	V7-d5t	36692	38856.7	RW	Weekday defrost 5 duration	WORD		0...250	min

FOLDER	LABEL	PAR. VALUE ADDR.	VIS PAR. ADDR.	R/W	DESCRIPTION	DATA SIZE	CPL	RANGE	MU
V7	V7-d5S	36693	38857.0	RW	Weekday defrost 5 end temperature	WORD		-58.0...302	°C/°F
V7	V7-d6H	36694	38857.1	RW	Start time hour weekday defrost 6	WORD		V7-d5H...24	hours
V7	V7-d6n	36695	38857.2	RW	Start time minutes weekday defrost 6	WORD		0...59	min
V7	V7-d6t	36696	38857.3	RW	Weekday defrost 6 duration	WORD		0...250	min
V7	V7-d6S	36697	38857.4	RW	Weekday defrost 6 end temperature	WORD		-58.0...302	°C/°F
V7	V7-F1H	36698	38857.5	RW	Start time hour weekend/public holiday defrost 1	WORD		0...24	hours
V7	V7-F1n	36699	38857.6	RW	Start time minutes weekend/public holiday defrost 1	WORD		0...59	min
V7	V7-F1t	36700	38857.7	RW	Weekend/public holiday defrost 1 duration	WORD		0...250	min
V7	V7-F1S	36701	38858.0	RW	Weekend defrost 1 end temperature	WORD		-58.0...302	°C/°F
V7	V7-F2H	36702	38858.1	RW	Start time hour weekend/public holiday defrost 2	WORD		V7-F1H...24	hours
V7	V7-F2n	36703	38858.2	RW	Start time minutes weekend/public holiday defrost 2	WORD		0...59	min
V7	V7-F2t	36704	38858.3	RW	Weekend/public holiday defrost 2 duration	WORD		0...250	min
V7	V7-F2S	36705	38858.4	RW	Weekend defrost 1 end temperature	WORD		-58.0...302	°C/°F
V7	V7-F3H	36706	38858.5	RW	Start time hour weekend/public holiday defrost 3	WORD		V7-F2H...24	hours
V7	V7-F3n	36707	38858.6	RW	Start time minutes weekend/public holiday defrost 3	WORD		0...59	min
V7	V7-F3t	36708	38858.7	RW	Weekend/public holiday defrost 3 duration	WORD		0...250	min
V7	V7-F3S	36709	38859.0	RW	Weekend defrost 1 end temperature	WORD		-58.0...302	°C/°F
V7	V7-F4H	36710	38859.1	RW	Start time hour weekend/public holiday defrost 4	WORD		V7-F3H...24	hours
V7	V7-F4n	36711	38859.2	RW	Start time minutes weekend/public holiday defrost 4	WORD		0...59	min
V7	V7-F4t	36712	38859.3	RW	Weekend/public holiday defrost 4 duration	WORD		0...250	min
V7	V7-F4S	36713	38859.4	RW	Weekend defrost 1 end temperature	WORD		-58.0...302	°C/°F
V7	V7-F5H	36714	38859.5	RW	Start time hour weekend/public holiday defrost 5	WORD		V7-F4H...24	hours
V7	V7-F5n	36715	38859.6	RW	Start time minutes weekend/public holiday defrost 5	WORD		0...59	min
V7	V7-F5t	36716	38859.7	RW	Weekend/public holiday defrost 5 duration	WORD		0...250	min
V7	V7-F5S	36717	38860.0	RW	Weekend defrost 1 end temperature	WORD		-58.0...302	°C/°F
V7	V7-F6H	36718	38860.1	RW	Start time hour weekend/public holiday defrost 6	WORD		V7-F5H...24	hours
V7	V7-F6n	36719	38860.2	RW	Start time minutes weekend/public holiday defrost 6	WORD		0...59	min
V7	V7-F6t	36720	38860.3	RW	Weekend/public holiday defrost 6 duration	WORD		0...250	min
V7	V7-F6S	36721	38860.4	RW	Weekend defrost 6 end temperature	WORD		-58.0...302	°C/°F
V7	V7-FP1	36784	38860.5	RW	Evaporator fan probe in normal mode	WORD		0...8	num
V7	V7-FP2	36785	38860.6	RW	Evaporator fan probe during defrost	WORD		0...8	num
V7	V7-FPt	36786	38860.7	RW	FSt parameter mode	WORD		0/1	flag
V7	V7-FSt	36787	38861.0	RW	Fans disabling temperature	WORD		-58.0...302	°C/°F
V7	V7-FAd	36788	38861.1	RW	Fans differential	WORD		0.1...25.0	°C/°F
V7	V7-Fdt	36789	38861.2	RW	Fan activation delay from compressor start	WORD		0...250	min
V7	V7-dt	36794	38861.3	RW	Dripping time	WORD		0...250	min
V7	V7-dFd	36792	38861.4	RW	Evaporator fans mode in defrost	WORD		0/1	flag
V7	V7-FCO	36791	38861.5	RW	Evaporator fans mode	WORD		0...3	num
V7	V7-FdC	36790	38861.7	RW	Fan switch-off delay from compressor stoppage	WORD		0...250	min
V7	V7-FOn	36795	38862.0	RW	Fans ON time in duty cycle	WORD		0...250	min
V7	V7-FOF	36796	38862.1	RW	Fans OFF time in duty cycle	WORD		0...250	min
V7	V7-Fnn	36797	38862.2	RW	Duty cycle on time during night mode	WORD		0...250	min
V7	V7-FnF	36798	38862.3	RW	Duty cycle off time during night mode	WORD		0...250	min
V7	V7-rA1	36812	38862.4	RW	Temperature alarm probe 1 selection	WORD		0...7	num
V7	V7-rA2	36813	38862.5	RW	Temperature alarm probe 2 selection	WORD		0...7	num
V7	V7-Att	36814	38862.6	RW	HAL and LAL parameter mode	WORD		0/1	flag
V7	V7-AFd	36815	38862.7	RW	Alarm setpoint differential	WORD		0.1...25.0	°C/°F
V7	V7-HA1	36816	38863.0	RW	Probe 1 maximum alarm	WORD		V7-LA1...302	°C/°F
V7	V7-LA1	36817	38863.1	RW	Probe 1 minimum alarm	WORD		-58.0...V7-HA1	°C/°F
V7	V7-HA2	36818	38863.2	RW	Probe 2 maximum alarm	WORD		V7-LA2...302	°C/°F
V7	V7-LA2	36819	38863.3	RW	Probe 2 minimum alarm	WORD		-58.0...V7-HA2	°C/°F
V7	V7-PAO	36820	38863.4	RW	Alarm exclusion at power-on	WORD		0...10	hours
V7	V7-dAO	36822	38863.5	RW	Alarm exclusion after defrost	WORD		0...250	min
V7	V7-OAO	36821	38863.6	RW	Alarm signalling delay from door closure	WORD		0...10	hours
V7	V7-tdO	36866	38863.7	RW	Open door disabling time	WORD		0...250	num

FOLDER	LABEL	PAR. VALUE ADDR.	VIS PAR. ADDR.	R/W	DESCRIPTION	DATA SIZE	CPL	RANGE	MU
V7	V7-tA1	36823	38864.0	RW	Alarm LA1 and HA1 signalling delay time	WORD		0...250	min
V7	V7-tA2	36824	38864.1	RW	Alarm LA2 and HA2 signalling delay time	WORD		0...250	min
V7	V7-dAt	36782	38864.2	RW	Enable alarm at end of defrost	WORD		0/1	flag
V7	V7-EAL	36826	38864.3	RW	External alarm switches off loads	WORD		0/1/2	num
V7	V7-tP	36867	38864.4	RW	Enable all keys to acknowledge an alarm	WORD		0/1	flag
V7	V7-Art	36811	38864.5	RW	Link supervision alarm activation period	WORD		0...250	min*10
V7	V7-dSd	36808	38864.6	RW	Enable light relay from door switch	WORD		0/1	flag
V7	V7-dLt	36809	38864.7	RW	Light relay deactivation delay	WORD		0...250	min
V7	V7-OFL	36810	38865.0	RW	Light key always disables light relay	WORD		0/1	num
V7	V7-dOd	36825	38865.1	RW	Door switch switches off loads	WORD		0...3	num
V7	V7-dOA	36827	38865.2	RW	Action forced by digital input	WORD		0...5	num
V7	V7-PEA	36828	38865.3	RW	Select DI for lock/unlock resources function	WORD		0...3	num
V7	V7-dCO	36829	38865.4	RW	Evaporator fan compressor activation/switch-off delay	WORD		0...250	min
V7	V7-dFO	36830	38865.5	RW	Evaporator fan activation/switch-off delay	WORD		0...250	min
V7	V7-ASb	36856	38865.6	RW	AUX/Light active in OFF key/input	WORD		0/1	flag
V7	V7-L00	36608	38865.7	RW	Probe sharing	WORD		0...7	num
V7	V7-L01	36609	38866.0	RW	Displayed value sharing	WORD		0/1/2	num
V7	V7-L02	36610	38866.1	RW	Send Setpoint value when modified	WORD		0/1	flag
V7	V7-L03	36611	38866.2	RW	Send defrost request	WORD		0/1/2	num
V7	V7-L04	36612	38866.3	RW	End defrost mode	WORD		0/1	flag
V7	V7-L05	36613	38866.4	RW	Standby command synchronisation	WORD		0/1	flag
V7	V7-L06	36614	38866.5	RW	Lights command synchronisation	WORD		0/1	flag
V7	V7-L07	36615	38866.6	RW	Reduced setpoint command synchronisation	WORD		0/1	flag
V7	V7-L08	36616	38866.7	RW	AUX command synchronisation	WORD		0/1	flag
V7	V7-L09	36617	38867.0	RW	Share saturation probe (pressure)	WORD		0/1	flag
V7	V7-L10	36868	38867.1	RW	Timeout waiting for end of dependent defrosts	WORD		0...250	min
V7	V7-L11	36618	38884.2	RW	Number of devices connected in Link^2 for alarm	WORD		0...8	min
V7	V7-L12	36619	38884.3	RW	Alarm sharing	WORD		0/1/2	min
V7	V7-dcS	36802	38867.4	RW	Deep Cooling setpoint	WORD		-58.0...302	°C/°F
V7	V7-tdc	36803	38867.5	RW	Deep Cooling Duration	WORD		0...250	min
V7	V7-dcc	36804	38867.6	RW	Wait for defrost cycle start	WORD		0...250	min
V7	V7-ESt	36731	38867.7	RW	Type of Energy Saving	WORD		0...4	num
V7	V7-ESF	36799	38868.0	RW	Night activation mode	WORD		0/1	flag
V7	V7-Cdt	36800	38868.1	RW	Min. door closing time for reduced set activation	WORD		0...255	min*10
V7	V7-ESo	36801	38868.2	RW	Open door cumulative time	WORD		0...10	num
V7	V7-OS1	36748	38868.3	RW	Offset SP1	WORD		-50.0...50.0	°C/°F
V7	V7-OS2	36749	38868.4	RW	Offset SP2	WORD		-50.0...50.0	°C/°F
V7	V7-Od1	36750	38868.5	RW	Offset energy saving door 1	WORD		-50.0...50.0	°C/°F
V7	V7-Od2	36751	38868.6	RW	Offset energy saving door 2	WORD		-50.0...50.0	°C/°F
V7	V7-dn1	36739	38868.7	RW	dn1 Differential in energy saving mode 1	WORD		-58.0...302	°C/°F
V7	V7-dn2	36740	38869.0	RW	dn2 Differential in energy saving mode 2	WORD		-58.0...302	°C/°F
V7	V7-EdH	36725	38869.1	RW	Weekday Energy Saving start hour	WORD		0...24	hours
V7	V7-Edn	36726	38869.2	RW	Weekday Energy Saving start minutes	WORD		0...59	min
V7	V7-Edd	36727	38869.3	RW	Weekday Energy Saving duration	WORD		1...72	hours
V7	V7-EFH	36728	38869.4	RW	Weekend Energy Saving start hour	WORD		0...24	hours
V7	V7-EFn	36729	38869.5	RW	Weekend Energy Saving start minutes	WORD		0...59	min
V7	V7-EFd	36730	38869.6	RW	Weekend Energy Saving duration	WORD		1...72	hours
V7	V7-FH	36831	38869.7	RW	Regulation mode	WORD		0...8	num
V7	V7-FHt	36833	38870.0	RW	Frame Heater period	WORD		1...2500	s*10
V7	V7-FH0	36834	38870.1	RW	Frame Heater setpoint	WORD		-58.0...302	°C/°F
V7	V7-FH1	36835	38870.2	RW	Frame Heater offset	WORD		0.0...25.0	°C/°F
V7	V7-FH2	36836	38870.3	RW	Frame Heater range	WORD		-58.0...302	°C/°F
V7	V7-FH3	36837	38870.4	RW	Min percentage	WORD		0...100	%
V7	V7-FH4	36838	38870.5	RW	Maximum percentage/Duty Cycle Day	WORD		0...100	%
V7	V7-FH5	36839	38870.6	RW	Maximum percentage/Duty Cycle Night (ES)	WORD		0...100	%

FOLDER	LABEL	PAR. VALUE ADDR.	VIS PAR. ADDR.	R/W	DESCRIPTION	DATA SIZE	CPL	RANGE	MU
V7	V7-FH6	36840	38870.7	RW	Percentage during defrost	WORD		0...100	%
V7	V7-LOC	36843	38871.0	RW	Keypad lock	WORD		0/1	flag
V7	V7-PS1	36844	38871.1	RW	Password 1	WORD		0...250	num
V7	V7-PS2	36845	38871.2	RW	Password 2	WORD		0...250	num
V7	V7-ndt	36846	38871.3	RW	Display with decimal point	WORD		0/1	flag
V7	V7-CA1	36652	38871.4	RW	Calibration Pb1	WORD		-30.0...30.0	°C/°F
V7	V7-CA2	36653	38871.5	RW	Calibration Pb2	WORD		-30.0...30.0	°C/°F
V7	V7-CA3	36654	38871.6	RW	Calibration Pb3	WORD		-30.0...30.0	°C/°F
V7	V7-CA4	36655	38871.7	RW	Calibration Pb4	WORD		-30.0...30.0	°C/°F
V7	V7-CA5	36656	38872.0	RW	Calibration Pb5	WORD		-30.0...30.0	°C/°F
V7	V7-CA6	36657	38872.1	RW	Calibration Pb6	WORD		-30.0...30.0	bar/Psi
V7	V7-CA7	36658	38872.2	RW	Calibration Pb7	WORD		-30.0...30.0	bar/Psi
V7	V7-LdL	36847	38872.3	RW	Minimum possible value	WORD		-58.0...V7-HdL	°C/°F
V7	V7-HdL	36848	38872.4	RW	Maximum possible value.	WORD		V7-LdL...302	°C/°F
V7	V7-ddL	36849	38872.5	RW	Lock display during defrost	WORD		0/1/2	num
V7	V7-Ldd	36850	38872.6	RW	Unlock timeout “ddL”	WORD		0...250	min
V7	V7-dro	36851	38872.7	RW	°C/°F selection. (0=°C, 1=°F)	WORD		0/1	flag
V7	V7-SbP	36852	38873.0	RW	Bar/Psi selection	WORD		0/1	flag
V7	V7-ddd	36853	38873.1	RW	Main Display	WORD		0...8	num
V7	V7-ddE	36854	38873.2	RW	Fundamental display on ECHO	WORD		0...8	num
V7	V7-rPH	36805	38873.3	RW	HACCP alarm probe selection	WORD		0...5	num
V7	V7-H00	36620	38873.4	RW	Type of Pb1-Pb2-Pb3-Pb4-Pb5 probes (0=NTC, 1=PTC, 2=Pt1000)	WORD		0/1/2	num
V7	V7-H02	36855	38873.5	RW	Key activation time	WORD		0...250	s
V7	V7-H08	36857	38873.6	RW	Stand-by mode	WORD		0/1/2	num
V7	V7-H11	36623	38873.7	RW	DI1 input configuration	WORD		-17...17	num
V7	V7-H12	36624	38874.0	RW	DI2 input configuration	WORD		-17...17	num
V7	V7-H13	36625	38874.1	RW	DI3 input configuration	WORD		-17...17	num
V7	V7-H14	36626	38874.2	RW	DI4 input configuration	WORD		-17...17	num
V7	V7-H15	36627	38874.3	RW	DI5 input configuration	WORD		-17...17	num
V7	V7-H16	36628	38874.4	RW	DI6 input configuration	WORD		-17...17	num
V7	V7-H17	36629	38874.5	RW	DI7 input configuration	WORD		-17...17	num
V7	V7-H18	36630	38874.6	RW	DI8 input configuration	WORD		-17...17	num
V7	V7-dti	36639	38874.7	RW	Unit of measurement for digital input 1 and 2	WORD		0/1	num
V7	V7-d11	36631	38875.0	RW	DI activation signalling delay	WORD		0...255	min/dti
V7	V7-d12	36632	38875.1	RW	DI2 activation signalling delay	WORD		0...255	min/dti
V7	V7-d13	36633	38875.2	RW	DI3 activation signalling delay	WORD		0...255	min
V7	V7-d14	36634	38875.3	RW	DI4 activation signalling delay	WORD		0...255	min
V7	V7-d15	36635	38875.4	RW	DI5 activation signalling delay	WORD		0...255	min
V7	V7-d16	36636	38875.5	RW	DI6 activation signalling delay	WORD		0...255	min
V7	V7-d17	36637	38875.6	RW	DI7 activation signalling delay	WORD		0...255	min
V7	V7-d18	36638	38875.7	RW	DI8 activation signalling delay	WORD		0...255	min
V7	V7-H21	36660	38876.0	RW	Configurability of digital output 1	WORD		0...14	num
V7	V7-H22	36661	38876.1	RW	Configurability of digital output 2	WORD		0...14	num
V7	V7-H23	36662	38876.2	RW	Configurability of digital output 3	WORD		0...14	num
V7	V7-H24	36663	38876.3	RW	Configurability of digital output 4	WORD		0...14	num
V7	V7-H25	36664	38876.4	RW	Configurability of digital output 5	WORD		0...14	num
V7	V7-H27	36666	38876.6	RW	Configurability of digital output 7	WORD		0...14	num
V7	V7-H29	36667	38876.7	RW	Enable buzzer	WORD		0/1	flag
V7	V7-H31	36858	38877.0	RW	Configuration of UP key	WORD		0...9	num
V7	V7-H32	36859	38877.1	RW	Configuration of DOWN key	WORD		0...9	num
V7	V7-H33	36860	38877.2	RW	ESC key configuration	WORD		0...9	num
V7	V7-H34	36861	38877.3	RW	FREE 1 key configuration	WORD		0...9	num
V7	V7-H35	36862	38877.4	RW	FREE 2 key configuration	WORD		0...9	num
V7	V7-H36	36863	38877.5	RW	FREE 3 key configuration	WORD		0...9	num
V7	V7-H37	36864	38877.6	RW	FREE 4 key configuration	WORD		0...9	num

FOLDER	LABEL	PAR. VALUE ADDR.	VIS PAR. ADDR.	R/W	DESCRIPTION	DATA SIZE	CPL	RANGE	MU
V7	V7-H41	36640	38877.7	RW	Pb1 input configuration (0=Disable, 1=DI, 2=H00)	WORD		0/1/2	num
V7	V7-H42	36641	38878.0	RW	Pb2 input configuration (0=Disable, 1=DI, 2=H00)	WORD		0/1/2	num
V7	V7-H43	36642	38878.1	RW	Pb3 input configuration (0=Disable, 1=DI, 2=H00)	WORD		0/1/2	num
V7	V7-H44	36643	38878.2	RW	Pb4 input configuration (0=Disable, 1=DI, 2=H00)	WORD		0/1/2	num
V7	V7-H45	36644	38878.3	RW	Pb5 input configuration (0=Disable, 1=DI, 2=H00)	WORD		0/1/2	num
V7	V7-H46	36645	38878.4	RW	Pb6 input configuration (0=Disable, 1=DI, 2=4-20 mA)	WORD		0/1/2	num
V7	V7-H47	36646	38878.5	RW	Pb7 input configuration (0=Disable, 1=DI, 2=Ratio)	WORD		0/1/2	num
V7	V7-H50	36668	38878.6	RW	Configuration of analogue output type	WORD		0/1	flag
V7	V7-H51	36669	38878.7	RW	Regulator linked to analogue output	WORD		0/1/2	num
V7	V7-H68	36670	38879.0	RW	Clock presence	WORD		0/1	flag
V7	V7-H70	36648	38879.1	RW	Selection of probe 1 for virtual probe	WORD		0...5	num
V7	V7-H71	36649	38879.2	RW	Selection of probe 2 for virtual probe	WORD		0...5	num
V7	V7-H72	36650	38879.3	RW	% calculation virtual probe day	WORD		0...100	%
V7	V7-H73	36651	38879.4	RW	% calculation virtual probe night	WORD		0...100	%
V7	V7-H74	36880	38883.7	RW	Sensor 1 selection for virtual filtered sensor	WORD		0...6	num
V7	V7-H75	36881	38884.0	RW	Thousandth of input signal to the virtual filtered sensor	WORD		1...1000	num
V7	V7-H76	36882	38884.1	RW	Offset virtual filtered sensor	WORD		-999.9...999.9	num
V7	V7-Ety	36865	38879,5	RW	Electronic expansion valve driver selection	WORD		0/1	num
V7	V7-UL	---	38882.0	RW	Visibility of parameter transfer function (Device -> UNICARD/MFK)	2 BIT		0...3	num
V7	V7-dL	---	38882.1	RW	Visibility of parameter transfer function (UNICARD/MFK -> Device)	2 BIT		0...3	num
V7	V7-Fr	---	38882.2	RW	UNICARD/MFK formatting function visibility	2 BIT		0...3	num
APPLICATION 8 PARAMETERS									
V8	V8-rE	37116	38944.0	RW	Regulation mode	WORD		0...5	num
V8	V8-rP1	37117	38944.1	RW	Control probe 1	WORD		0...8	num
V8	V8-rP2	37118	38944.2	RW	Thermostat 2 regulation probe	WORD		0...8	num
V8	V8-SP1	37119	38944.3	RW	Setpoint	WORD		V8-LS1...V8-HS1	°C/°F
V8	V8-dF1	37120	38944.4	RW	Differential/proportional band	WORD		-58.0...302	°C/°F
V8	V8-SP2	37121	38944.5	RW	Setpoint according to thermostat	WORD		V8-LS2...V8-HS2	°C/°F
V8	V8-dF2	37122	38944.6	RW	Differential according to thermostat	WORD		-58.0...302	°C/°F
V8	V8-Stt	37125	38944.7	RW	Differential control mode	WORD		0/1	flag
V8	V8-HS1	37128	38945.0	RW	Maximum SP1 value	WORD		V8-LS1...V8-HdL	°C/°F
V8	V8-LS1	37129	38945.1	RW	Minimum SP1 value	WORD		V8-LdL...V8-HS1	°C/°F
V8	V8-HS2	37130	38945.2	RW	Maximum SP2 value	WORD		V8-LS2...V8-HdL	°C/°F
V8	V8-LS2	37131	38945.3	RW	Minimum SP2 value	WORD		V8-LdL...V8-HS2	°C/°F
V8	V8-HC1	37126	38945.4	RW	Thermostat mode 1	WORD		0/1	flag
V8	V8-HC2	37127	38945.5	RW	Thermostat mode 2	WORD		0/1	flag
V8	V8-Cit	37136	38945.7	RW	Minimum compressor ON time	WORD		0...250	min
V8	V8-CAt	37137	38946.0	RW	Maximum compressor ON time	WORD		0...250	min
V8	V8-Ont	37142	38946.1	RW	Probe error ON time	WORD		0...250	min
V8	V8-OFt	37143	38946.2	RW	Probe error OFF time	WORD		0...250	min
V8	V8-dOn	37138	38946.3	RW	Delayed start	WORD		0...250	s
V8	V8-dOF	37139	38946.4	RW	Delay after switching off	WORD		0...250	min
V8	V8-dbi	37140	38946.5	RW	Time lag between starts	WORD		0...250	min
V8	V8-OdO	37141	38946.6	RW	Output delay from power-on	WORD		0...250	min
V8	V8-OF1	37147	38947.3	RW	Forced remote offset	WORD		-50.0...50.0	°C/°F
V8	V8-SS1	37254	38978.4	RW	Compressor Softstart: hotgas valve opening advance	WORD		0...250	s
V8	V8-SS2	37255	38978.5	RW	Compressor Softstart: hotgas valve opening delay	WORD		0...250	s

FOLDER	LABEL	PAR. VALUE ADDR.	VIS PAR. ADDR.	R/W	DESCRIPTION	DATA SIZE	CPL	RANGE	MU
V8	V8-dP1	37148	38947.4	RW	Defrost probe 1 selection	WORD		0...8	num
V8	V8-dP2	37149	38947.5	RW	Defrost probe 2 selection	WORD		0...8	num
V8	V8-dtY	37152	38947.6	RW	Defrost mode	WORD		0...4	num
V8	V8-dFt	37150	38947.7	RW	Defrost activation mode with two probes	WORD		0/1/2	num
V8	V8-dit	37153	38948.0	RW	Interval between defrost cycles	WORD		0...250	hours/dt1
V8	V8-dt1	37156	38948.1	RW	Unit of measurement for defrost interval	WORD		0/1/2	num
V8	V8-dt2	37157	38948.2	RW	Unit of measurement for defrost duration	WORD		0/1/2	num
V8	V8-dCt	37151	38948.3	RW	Defrost interval count mode	WORD		0...5	num
V8	V8-dOH	37158	38948.4	RW	Defrost interval count mode	WORD		0...250	min
V8	V8-dE1	37154	38948.5	RW	Evaporator 1 defrost timeout	WORD		1...250	min/dt2
V8	V8-dE2	37155	38948.6	RW	Evaporator 2 defrost timeout	WORD		1...250	min/dt2
V8	V8-dS1	37160	38948.7	RW	Probe 1 defrost end temperature	WORD		-58.0...302	°C/°F
V8	V8-dS2	37161	38949.0	RW	Probe 2 defrost end temperature	WORD		-58.0...302	°C/°F
V8	V8-dSS	37159	38949.1	RW	Start defrost temperature threshold	WORD		-58.0...302	°C/°F
V8	V8-dPO	37162	38949.2	RW	Defrost activation request from power-on	WORD		0/1	flag
V8	V8-tcd	37163	38949.3	RW	Minimum compressor ON or OFF time before defrost	WORD		-60...60	min
V8	V8-ndE	37164	38949.4	RW	Minimum defrost time (hot gas only)	WORD		0...250	min
V8	V8-PdC	37165	38949.5	RW	Hot gas extraction time at defrost end	WORD		0...250	min
V8	V8-tPd	37167	38949.6	RW	Pump down time before defrost startup	WORD		0...255	min
V8	V8-dPH	37106	38949.7	RW	Periodic start defrost hour	WORD		0...24	hours
V8	V8-dPn	37107	38950.0	RW	Periodic start defrost minutes	WORD		0...59	min
V8	V8-dPd	37108	38950.1	RW	Regular defrost interval duration	WORD		1...7	day
V8	V8-Fd1	37055	38950.2	RW	Weekend/public holiday 1	WORD		0...7	num
V8	V8-Fd2	37056	38950.3	RW	Weekend/public holiday 2	WORD		0...7	num
V8	V8-Edt	37057	38950.4	RW	Custom duration and temperature for each event	WORD		0/1	flag
V8	V8-d1H	37058	38950.5	RW	Start time hour weekday defrost 1	WORD		0...24	hours
V8	V8-d1n	37059	38950.6	RW	Start time minutes weekday defrost 1	WORD		0...59	min
V8	V8-d1t	37060	38950.7	RW	Weekday defrost 1 duration	WORD		0...250	min
V8	V8-d1S	37061	38951.0	RW	Weekday defrost 1 end temperature	WORD		-58.0...302	°C/°F
V8	V8-d2H	37062	38951.1	RW	Start time hour weekday defrost 2	WORD		V8-d1H...24	hours
V8	V8-d2n	37063	38951.2	RW	Start time minutes weekday defrost 2	WORD		0...59	min
V8	V8-d2t	37064	38951.3	RW	Weekday defrost 2 duration	WORD		0...250	min
V8	V8-d2S	37065	38951.4	RW	Weekday defrost 2 end temperature	WORD		-58.0...302	°C/°F
V8	V8-d3H	37066	38951.5	RW	Start time hour weekday defrost 3	WORD		V8-d2H...24	hours
V8	V8-d3n	37067	38951.6	RW	Start time minutes weekday defrost 3	WORD		0...59	min
V8	V8-d3t	37068	38951.7	RW	Weekday defrost 3 duration	WORD		0...250	min
V8	V8-d3S	37069	38952.0	RW	Weekday defrost 3 end temperature	WORD		-58.0...302	°C/°F
V8	V8-d4H	37070	38952.1	RW	Start time hour weekday defrost 4	WORD		V8-d3H...24	hours
V8	V8-d4n	37071	38952.2	RW	Start time minutes weekday defrost 4	WORD		0...59	min
V8	V8-d4t	37072	38952.3	RW	Weekday defrost 4 duration	WORD		0...250	min
V8	V8-d4S	37073	38952.4	RW	Weekday defrost 4 end temperature	WORD		-58.0...302	°C/°F
V8	V8-d5H	37074	38952.5	RW	Start time hour weekday defrost 5	WORD		V8-d4H...24	hours
V8	V8-d5n	37075	38952.6	RW	Start time minutes weekday defrost 5	WORD		0...59	min
V8	V8-d5t	37076	38952.7	RW	Weekday defrost 5 duration	WORD		0...250	min
V8	V8-d5S	37077	38953.0	RW	Weekday defrost 5 end temperature	WORD		-58.0...302	°C/°F
V8	V8-d6H	37078	38953.1	RW	Start time hour weekday defrost 6	WORD		V8-d5H...24	hours
V8	V8-d6n	37079	38953.2	RW	Start time minutes weekday defrost 6	WORD		0...59	min
V8	V8-d6t	37080	38953.3	RW	Weekday defrost 6 duration	WORD		0...250	min
V8	V8-d6S	37081	38953.4	RW	Weekday defrost 6 end temperature	WORD		-58.0...302	°C/°F
V8	V8-F1H	37082	38953.5	RW	Start time hour weekend/public holiday defrost 1	WORD		0...24	hours
V8	V8-F1n	37083	38953.6	RW	Start time minutes weekend/public holiday defrost 1	WORD		0...59	min
V8	V8-F1t	37084	38953.7	RW	Weekend/public holiday defrost 1 duration	WORD		0...250	min
V8	V8-F1S	37085	38954.0	RW	Weekend defrost 1 end temperature	WORD		-58.0...302	°C/°F
V8	V8-F2H	37086	38954.1	RW	Start time hour weekend/public holiday defrost 2	WORD		V8-F1H...24	hours
V8	V8-F2n	37087	38954.2	RW	Start time minutes weekend/public holiday defrost 2	WORD		0...59	min

FOLDER	LABEL	PAR. VALUE ADDR.	VIS PAR. ADDR.	R/W	DESCRIPTION	DATA SIZE	CPL	RANGE	MU
V8	V8-F2t	37088	38954.3	RW	Weekend/public holiday defrost 2 duration	WORD		0...250	min
V8	V8-F2S	37089	38954.4	RW	Weekend defrost 1 end temperature	WORD		-58.0...302	°C/°F
V8	V8-F3H	37090	38954.5	RW	Start time hour weekend/public holiday defrost 3	WORD		V8-F2H...24	hours
V8	V8-F3n	37091	38954.6	RW	Start time minutes weekend/public holiday defrost 3	WORD		0...59	min
V8	V8-F3t	37092	38954.7	RW	Weekend/public holiday defrost 3 duration	WORD		0...250	min
V8	V8-F3S	37093	38955.0	RW	Weekend defrost 1 end temperature	WORD		-58.0...302	°C/°F
V8	V8-F4H	37094	38955.1	RW	Start time hour weekend/public holiday defrost 4	WORD		V8-F3H...24	hours
V8	V8-F4n	37095	38955.2	RW	Start time minutes weekend/public holiday defrost 4	WORD		0...59	min
V8	V8-F4t	37096	38955.3	RW	Weekend/public holiday defrost 4 duration	WORD		0...250	min
V8	V8-F4S	37097	38955.4	RW	Weekend defrost 1 end temperature	WORD		-58.0...302	°C/°F
V8	V8-F5H	37098	38955.5	RW	Start time hour weekend/public holiday defrost 5	WORD		F4H...24	hours
V8	V8-F5n	37099	38955.6	RW	Start time minutes weekend/public holiday defrost 5	WORD		0...59	min
V8	V8-F5t	37100	38955.7	RW	Weekend/public holiday defrost 5 duration	WORD		0...250	min
V8	V8-F5S	37101	38956.0	RW	Weekend defrost 1 end temperature	WORD		-58.0...302	°C/°F
V8	V8-F6H	37102	38956.1	RW	Start time hour weekend/public holiday defrost 6	WORD		F5H...24	hours
V8	V8-F6n	37103	38956.2	RW	Start time minutes weekend/public holiday defrost 6	WORD		0...59	min
V8	V8-F6t	37104	38956.3	RW	Weekend/public holiday defrost 6 duration	WORD		0...250	min
V8	V8-F6S	37105	38956.4	RW	Weekend defrost 6 end temperature	WORD		-58.0...302	°C/°F
V8	V8-FP1	37168	38956.5	RW	Evaporator fan probe in normal mode	WORD		0...8	num
V8	V8-FP2	37169	38956.6	RW	Evaporator fan probe during defrost	WORD		0...8	num
V8	V8-FPt	37170	38956.7	RW	FSt parameter mode	WORD		0/1	flag
V8	V8-FSt	37171	38957.0	RW	Fans disabling temperature	WORD		-58.0...302	°C/°F
V8	V8-FAd	37172	38957.1	RW	Fans differential	WORD		0.1...25.0	°C/°F
V8	V8-Fdt	37173	38957.2	RW	Fan activation delay from compressor start	WORD		0...250	min
V8	V8-dt	37178	38957.3	RW	Dripping time	WORD		0...250	min
V8	V8-dFd	37176	38957.4	RW	Evaporator fans mode in defrost	WORD		0/1	flag
V8	V8-FCO	37175	38957.5	RW	Evaporator fans mode	WORD		0...3	num
V8	V8-FdC	37174	38957.7	RW	Fan switch-off delay from compressor stoppage	WORD		0...250	min
V8	V8-FOn	37179	38958.0	RW	Fans ON time in duty cycle	WORD		0...250	min
V8	V8-FOF	37180	38958.1	RW	Fans OFF time in duty cycle	WORD		0...250	min
V8	V8-Fnn	37181	38958.2	RW	Duty cycle on time during night mode	WORD		0...250	min
V8	V8-FnF	37182	38958.3	RW	Duty cycle off time during night mode	WORD		0...250	min
V8	V8-rA1	37196	38958.4	RW	Temperature alarm probe 1 selection	WORD		0...7	num
V8	V8-rA2	37197	38958.5	RW	Temperature alarm probe 2 selection	WORD		0...7	num
V8	V8-Att	37198	38958.6	RW	HAL and LAL parameter mode	WORD		0/1	flag
V8	V8-AFd	37199	38958.7	RW	Alarm setpoint differential	WORD		0.1...25.0	°C/°F
V8	V8-HA1	37200	38959.0	RW	Probe 1 maximum alarm	WORD		V8-LA1...302	°C/°F
V8	V8-LA1	37201	38959.1	RW	Probe 1 minimum alarm	WORD		-58.0...V8-HA1	°C/°F
V8	V8-HA2	37202	38959.2	RW	Probe 2 maximum alarm	WORD		V8-LA2...302	°C/°F
V8	V8-LA2	37203	38959.3	RW	Probe 2 minimum alarm	WORD		-58.0...V8-HA2	°C/°F
V8	V8-PAO	37204	38959.4	RW	Alarm exclusion at power-on	WORD		0...10	hours
V8	V8-dAO	37206	38959.5	RW	Alarm exclusion after defrost	WORD		0...250	min
V8	V8-OAO	37205	38959.6	RW	Alarm signalling delay from door closure	WORD		0...10	hours
V8	V8-tdO	37250	38959.7	RW	Open door disabling time	WORD		0...250	num
V8	V8-tA1	37207	38960.0	RW	Alarm LA1 and HA1 signalling delay time	WORD		0...250	min
V8	V8-tA2	37208	38960.1	RW	Alarm LA2 and HA2 signalling delay time	WORD		0...250	min
V8	V8-dAt	37166	38960.2	RW	Enable alarm at end of defrost	WORD		0/1	flag
V8	V8-EAL	37210	38960.3	RW	External alarm switches off loads	WORD		0/1/2	num
V8	V8-tP	37251	38960.4	RW	Enable all keys to acknowledge an alarm	WORD		0/1	flag
V8	V8-Art	37195	38960.5	RW	Link supervision alarm activation period	WORD		0...250	min*10
V8	V8-dSd	37192	38960.6	RW	Enable light relay from door switch	WORD		0/1	flag
V8	V8-dLt	37193	38960.7	RW	Light relay deactivation delay	WORD		0...250	min
V8	V8-OFL	37194	38961.0	RW	Light key always disables light relay	WORD		0/1	flag
V8	V8-dOd	37209	38961.1	RW	Door switch switches off loads	WORD		0...3	num
V8	V8-dOA	37211	38961.2	RW	Action forced by digital input	WORD		0...5	num

FOLDER	LABEL	PAR. VALUE ADDR.	VIS PAR. ADDR.	R/W	DESCRIPTION	DATA SIZE	CPL	RANGE	MU
V8	V8-PEA	37212	38961.3	RW	Select DI for lock/unlock resources function	WORD		0...3	num
V8	V8-dCO	37213	38961.4	RW	Evaporator fan compressor activation/switch-off delay	WORD		0...250	min
V8	V8-dFO	37214	38961.5	RW	Evaporator fan activation/switch-off delay	WORD		0...250	min
V8	V8-ASb	37240	38961.6	RW	AUX/Light active in OFF key/input	WORD		0/1	flag
V8	V8-L00	36992	38961.7	RW	Probe sharing	WORD		0...7	num
V8	V8-L01	36993	38962.0	RW	Displayed value sharing	WORD		0/1/2	num
V8	V8-L02	36994	38962.1	RW	Send Setpoint value when modified	WORD		0/1	flag
V8	V8-L03	36995	38962.2	RW	Send defrost request	WORD		0/1/2	num
V8	V8-L04	36996	38962.3	RW	End defrost mode	WORD		0/1	flag
V8	V8-L05	36997	38962.4	RW	Standby command synchronisation	WORD		0/1	flag
V8	V8-L06	36998	38962.5	RW	Lights command synchronisation	WORD		0/1	flag
V8	V8-L07	36999	38962.6	RW	Reduced setpoint command synchronisation	WORD		0/1	flag
V8	V8-L08	37000	38962.7	RW	AUX command synchronisation	WORD		0/1	flag
V8	V8-L09	37001	38963.0	RW	Share saturation probe (pressure)	WORD		0/1	flag
V8	V8-L10	37252	38963.1	RW	Timeout waiting for end of dependent defrosts	WORD		0...250	min
V8	V8-L11	37002	38980.2	RW	Number of devices connected in Link² for alarm	WORD		0...8	min
V8	V8-L12	37003	38980.3	RW	Alarm sharing	WORD		0/1/2	min
V8	V8-dcS	37186	38963.4	RW	Deep Cooling setpoint	WORD		-58.0...302	°C/°F
V8	V8-tdc	37187	38963.5	RW	Deep Cooling Duration	WORD		0...250	min
V8	V8-dcc	37188	38963.6	RW	Wait for defrost cycle start	WORD		0...250	min
V8	V8-ESt	37115	38963.7	RW	Type of Energy Saving	WORD		0...4	num
V8	V8-ESF	37183	38964.0	RW	Night activation mode	WORD		0/1	flag
V8	V8-Cdt	37184	38964.1	RW	Min. door closing time for reduced set activation	WORD		0...255	min*10
V8	V8-ESo	37185	38964.2	RW	Open door cumulative time	WORD		0...10	num
V8	V8-OS1	37132	38964.3	RW	Offset SP1	WORD		-50.0...50.0	°C/°F
V8	V8-OS2	37133	38964.4	RW	Offset SP2	WORD		-50.0...50.0	°C/°F
V8	V8-Od1	37134	38964.5	RW	Offset energy saving door 1	WORD		-50.0...50.0	°C/°F
V8	V8-Od2	37135	38964.6	RW	Offset energy saving door 2	WORD		-50.0...50.0	°C/°F
V8	V8-dn1	37123	38964.7	RW	dn1 Differential in energy saving mode 1	WORD		-58.0...302	°C/°F
V8	V8-dn2	37124	38965.0	RW	dn2 Differential in energy saving mode 2	WORD		-58.0...302	°C/°F
V8	V8-EdH	37109	38965.1	RW	Weekday Energy Saving start hour	WORD		0...24	hours
V8	V8-Edn	37110	38965.2	RW	Weekday Energy Saving start minutes	WORD		0...59	min
V8	V8-Edd	37111	38965.3	RW	Weekday Energy Saving duration	WORD		1...72	hours
V8	V8-EFH	37112	38965.4	RW	Weekend Energy Saving start hour	WORD		0...24	hours
V8	V8-EFn	37113	38965.5	RW	Weekend Energy Saving start minutes	WORD		0...59	min
V8	V8-EFd	37114	38965.6	RW	Weekend Energy Saving duration	WORD		1...72	hours
V8	V8-FH	37215	38965.7	RW	Regulation mode	WORD		0...8	num
V8	V8-FHt	37217	38966.0	RW	Frame Heater period	WORD		1...2500	s*10
V8	V8-FH0	37218	38966.1	RW	Frame Heater setpoint	WORD		-58.0...302	°C/°F
V8	V8-FH1	37219	38966.2	RW	Frame Heater offset	WORD		0.0...25.0	°C/°F
V8	V8-FH2	37220	38966.3	RW	Frame Heater range	WORD		-58.0...302	°C/°F
V8	V8-FH3	37221	38966.4	RW	Min percentage	WORD		0...100	%
V8	V8-FH4	37222	38966.5	RW	Maximum percentage/Duty Cycle Day	WORD		0...100	%
V8	V8-FH5	37223	38966.6	RW	Maximum percentage/Duty Cycle Night (ES)	WORD		0...100	%
V8	V8-FH6	37224	38966.7	RW	Percentage during defrost	WORD		0...100	%
V8	V8-LOC	37227	38967.0	RW	Keypad lock	WORD		0/1	flag
V8	V8-PS1	37228	38967.1	RW	Password 1	WORD		0...250	num
V8	V8-PS2	37229	38967.2	RW	Password 2	WORD		0...250	num
V8	V8-ndt	37230	38967.3	RW	Display with decimal point	WORD		0/1	flag
V8	V8-CA1	37036	38967.4	RW	Calibration Pb1	WORD		-30.0...30.0	°C/°F
V8	V8-CA2	37037	38967.5	RW	Calibration Pb2	WORD		-30.0...30.0	°C/°F
V8	V8-CA3	37038	38967.6	RW	Calibration Pb3	WORD		-30.0...30.0	°C/°F
V8	V8-CA4	37039	38967.7	RW	Calibration Pb4	WORD		-30.0...30.0	°C/°F
V8	V8-CA5	37040	38968.0	RW	Calibration Pb5	WORD		-30.0...30.0	°C/°F
V8	V8-CA6	37041	38968.1	RW	Calibration Pb6	WORD		-30.0...30.0	bar/Psi

FOLDER	LABEL	PAR. VALUE ADDR.	VIS PAR. ADDR.	R/W	DESCRIPTION	DATA SIZE	CPL	RANGE	MU
V8	V8-CA7	37042	38968.2	RW	Calibration Pb7	WORD		-30.0...30.0	bar/Psi
V8	V8-LdL	37231	38968.3	RW	Minimum possible value	WORD		-58.0...V8-HdL	°C/°F
V8	V8-HdL	37232	38968.4	RW	Maximum possible value.	WORD		V8-LdL...302	°C/°F
V8	V8-ddL	37233	38968.5	RW	Lock display during defrost	WORD		0/1/2	num
V8	V8-Ldd	37234	38968.6	RW	Unlock timeout “ddL”	WORD		0...250	min
V8	V8-dro	37235	38968.7	RW	°C/°F selection. (0=°C, 1=°F)	WORD		0/1	flag
V8	V8-SbP	37236	38969.0	RW	Bar/Psi selection	WORD		0/1	flag
V8	V8-ddd	37237	38969.1	RW	Main Display	WORD		0...8	num
V8	V8-ddE	37238	38969.2	RW	Fundamental display on ECHO	WORD		0...8	num
V8	V8-rPH	37189	38969.3	RW	HACCP alarm probe selection	WORD		0...5	num
V8	V8-H00	37004	38969.4	RW	Type of Pb1-Pb2-Pb3-Pb4-Pb5 probes (0=NTC, 1=PTC, 2=Pt1000)	WORD		0/1/2	num
V8	V8-H02	37239	38969.5	RW	Key activation time	WORD		0...250	s
V8	V8-H08	37241	38969.6	RW	Stand-by mode	WORD		0/1/2	num
V8	V8-H11	37007	38969.7	RW	DI1 input configuration	WORD		-17...17	num
V8	V8-H12	37008	38970.0	RW	DI2 input configuration	WORD		-17...17	num
V8	V8-H13	37009	38970.1	RW	DI3 input configuration	WORD		-17...17	num
V8	V8-H14	37010	38970.2	RW	DI4 input configuration	WORD		-17...17	num
V8	V8-H15	37011	38970.3	RW	DI5 input configuration	WORD		-17...17	num
V8	V8-H16	37012	38970.4	RW	DI6 input configuration	WORD		-17...17	num
V8	V8-H17	37013	38970.5	RW	DI7 input configuration	WORD		-17...17	num
V8	V8-H18	37014	38970.6	RW	DI8 input configuration	WORD		-17...17	num
V8	V8-dti	37023	38970.7	RW	Unit of measurement for digital input 1 and 2	WORD		0/1	num
V8	V8-d11	37015	38971.0	RW	DI activation signalling delay	WORD		0...255	min/dti
V8	V8-d12	37016	38971.1	RW	DI2 activation signalling delay	WORD		0...255	mindti
V8	V8-d13	37017	38971.2	RW	DI3 activation signalling delay	WORD		0...255	min
V8	V8-d14	37018	38971.3	RW	DI4 activation signalling delay	WORD		0...255	min
V8	V8-d15	37019	38971.4	RW	DI5 activation signalling delay	WORD		0...255	min
V8	V8-d16	37020	38971.5	RW	DI6 activation signalling delay	WORD		0...255	min
V8	V8-d17	37021	38971.6	RW	DI7 activation signalling delay	WORD		0...255	min
V8	V8-d18	37022	38971.7	RW	DI8 activation signalling delay	WORD		0...255	min
V8	V8-H21	37044	38972.0	RW	Configurability of digital output 1	WORD		0...14	num
V8	V8-H22	37045	38972.1	RW	Configurability of digital output 2	WORD		0...14	num
V8	V8-H23	37046	38972.2	RW	Configurability of digital output 3	WORD		0...14	num
V8	V8-H24	37047	38972.3	RW	Configurability of digital output 4	WORD		0...14	num
V8	V8-H25	37048	38972.4	RW	Configurability of digital output 5	WORD		0...14	num
V8	V8-H27	37050	38972.6	RW	Configurability of digital output 7	WORD		0...14	num
V8	V8-H29	37051	38972.7	RW	Enable buzzer	WORD		0/1	flag
V8	V8-H31	37242	38973.0	RW	Configuration of UP key	WORD		0...9	num
V8	V8-H32	37243	38973.1	RW	Configuration of DOWN key	WORD		0...9	num
V8	V8-H33	37244	38973.2	RW	ESC key configuration	WORD		0...9	num
V8	V8-H34	37245	38973.3	RW	FREE 1 key configuration	WORD		0...9	num
V8	V8-H35	37246	38973.4	RW	FREE 2 key configuration	WORD		0...9	num
V8	V8-H36	37247	38973.5	RW	FREE 3 key configuration	WORD		0...9	num
V8	V8-H37	37248	38973.6	RW	FREE 4 key configuration	WORD		0...9	num
V8	V8-H41	37024	38973.7	RW	Pb1 input configuration (0=Disable, 1=DI, 2=H00)	WORD		0/1/2	num
V8	V8-H42	37025	38974.0	RW	Pb2 input configuration (0=Disable, 1=DI, 2=H00)	WORD		0/1/2	num
V8	V8-H43	37026	38974.1	RW	Pb3 input configuration (0=Disable, 1=DI, 2=H00)	WORD		0/1/2	num
V8	V8-H44	37027	38974.2	RW	Pb4 input configuration (0=Disable, 1=DI, 2=H00)	WORD		0/1/2	num
V8	V8-H45	37028	38974.3	RW	Pb5 input configuration (0=Disable, 1=DI, 2=H00)	WORD		0/1/2	num

FOLDER	LABEL	PAR. VALUE ADDR.	VIS PAR. ADDR.	R/W	DESCRIPTION	DATA SIZE	CPL	RANGE	MU
V8	V8-H46	37029	38974.4	RW	Pb6 input configuration (0=Disable, 1=DI, 2=4-20 mA)	WORD		0/1/2	num
V8	V8-H47	37030	38974.5	RW	Pb7 input configuration (0=Disable, 1=DI, 2=Ratio)	WORD		0/1/2	num
V8	V8-H50	37052	38974.6	RW	Configuration of analogue output type	WORD		0/1	flag
V8	V8-H51	37053	38974.7	RW	Regulator linked to analogue output	WORD		0/1/2	num
V8	V8-H68	37054	38975.0	RW	Clock presence	WORD		0/1	flag
V8	V8-H70	37032	38975.1	RW	Selection of probe 1 for virtual probe	WORD		0...5	num
V8	V8-H71	37033	38975.2	RW	Selection of probe 2 for virtual probe	WORD		0...5	num
V8	V8-H72	37034	38975.3	RW	% calculation virtual probe day	WORD		0...100	%
V8	V8-H73	37035	38975.4	RW	% calculation virtual probe night	WORD		0...100	%
V8	V8-H74	37264	38979.7	RW	Sensor 1 selection for virtual filtered sensor	WORD		0...6	num
V8	V8-H75	37265	38980.0	RW	Thousandth of input signal to the virtual filtered sensor	WORD		1...1000	num
V8	V8-H76	37266	38980.1	RW	Offset virtual filtered sensor	WORD		-999.9...999.9	num
V8	V8-Ety	37249	38975,5	RW	Electronic expansion valve driver selection	WORD		0/1	num
V8	V8-UL	---	38978.0	RW	Visibility of parameter transfer function (Device -> UNICARD/MFK)	2 BIT		0...3	num
V8	V8-dL	---	38978.1	RW	Visibility of parameter transfer function (UNICARD/MFK -> Device)	2 BIT		0...3	num
V8	V8-Fr	---	38978.2	RW	UNICARD/MFK formatting function visibility	2 BIT		0...3	num

11.2.2. Folder visibility table

FOLDER	MODBUS ADDRESS	R/W	DESCRIPTION	DATA SIZE	RANGE	Address by Application								MU
						AP1	AP2	AP3	AP4	AP5	AP6	AP7	AP8	
CP	38175.6	RW	CP folder visibility (Compressor)	2 BIT	0 ... 3	38303.6	38399.6	38495.6	38591.6	38687.6	38783.6	38879.6	38975.6	num
dEF	37175.7	RW	dEF folder visibility (Defrost)	2 BIT	0 ... 3	38303.7	38399.7	38495.7	38591.7	38687.7	38783.7	38879.7	38975.7	num
FAn	38176.0	RW	FAn folder visibility (Fans)	2 BIT	0 ... 3	38304.0	38400.0	38496.0	38592.0	38688.0	38784.0	38880.0	38976.0	num
AL	38176.1	RW	AL folder visibility (Alarms)	2 BIT	0 ... 3	38304.1	38400.1	38496.1	38592.1	38688.1	38784.1	38880.1	38976.1	num
Lit	38176.2	RW	Lit folder visibility (Lights and Digital Inputs)	2 BIT	0 ... 3	38304.2	38400.2	38496.2	38592.2	38688.2	38784.2	38880.2	38976.2	num
Lin	38176.3	RW	Lin folder visibility (LINK[2])	2 BIT	0 ... 3	38304.3	38400.3	38496.3	38592.3	38688.3	38784.3	38880.3	38976.3	num
dEC	38176.6	RW	dEC folder visibility (Deep cooling)	2 BIT	0 ... 3	38304.6	38400.6	38496.6	38592.6	38688.6	38784.6	38880.6	38976.6	num
EnS	38176.7	RW	EnS folder visibility (Energy saving)	2 BIT	0 ... 3	38304.7	38400.7	38496.7	38592.7	38688.7	38784.7	38880.7	38976.7	num
FrH	38177.0	RW	FrH folder visibility (Frame Heater)	2 BIT	0 ... 3	38305.0	38401.0	38497.0	38593.0	38689.0	38785.0	38881.0	38977.0	num
Add	38177.1	RW	Add folder visibility (Communication)	2 BIT	0 ... 3	38305.1	38401.1	38497.1	38593.1	38689.1	38785.1	38881.1	38977.1	num
diS	38177.2	RW	diS folder visibility (Display)	2 BIT	0 ... 3	38305.2	38401.2	38497.2	38593.2	38689.2	38785.2	38881.2	38977.2	num
HCP	38177.3	RW	HCP folder visibility (HACCP)	2 BIT	0 ... 3	38305.3	38401.3	38497.3	38593.3	38689.3	38785.3	38881.3	38977.3	num
CnF	38177.4	RW	CnF (Configuration) folder visibility	2 BIT	0 ... 3	38305.4	38401.4	38497.4	38593.4	38689.4	38785.4	38881.4	38977.4	num
EE0	38177.5	RW	EE0 folder visibility (Electronic Valve)	2 BIT	0 ... 3	38305.5	38401.5	38497.5	38593.5	38689.5	38785.5	38881.5	38977.5	num
FPr	38177.6	RW	FPr (UNICARD/MFK) folder visibility	2 BIT	0 ... 3	38305.6	38401.6	38497.6	38593.6	38689.6	38785.6	38881.6	38977.6	num
FnC	38177.7	RW	FnC (Functions) folder visibility	2 BIT	0 ... 3	38305.7	38401.7	38497.7	38593.7	38689.7	38785.7	38881.7	38977.7	num

11.2.3. Client Table

LABEL	ADDRESS	R/W	DESCRIPTION	DATA SIZE	RANGE	MU
A1	6145.0	R	Control probe 1	WORD	-67.0...320	°C/°F
A2	6146.0	R	Control probe 2	WORD	-67.0...320	°C/°F
A3	6147.0	R	Temperature alarm probe 1	WORD	-67.0...320	°C/°F
A4	6148.0	R	Temperature alarm probe 2	WORD	-67.0...320	°C/°F
A5	6149.0	R	Defrost probe 1	WORD	-67.0...320	°C/°F
A6	6150.0	R	Defrost probe 2	WORD	-67.0...320	°C/°F
A7	6151.0	R	Evaporator fan probe	WORD	-67.0...320	°C/°F
A8	6152.0	R	Frame Heater probe	WORD	-67.0...320	°C/°F
A9	6153.0	R	Valve evaporator pressure	WORD	-67.0...320	bar/Psi
A10	6154.0	R	Valve overheating temperature	WORD	-67.0...320	°C/°F
A11	6155.0	R	HACCP probe	WORD	-67.0...320	°C/°F
A12	6174.0	R	Valve 1 saturation temperature	WORD	-67.0...320	°C/°F
SP1	6156.0	R	Control setpoint value 1	WORD	-67.0...320	°C/°F
SP2	6157.0	R	Control setpoint value 2	WORD	-67.0...320	°C/°F
OH1	6158.0	R	Overheating value	WORD	-67.0...320	°C/°F
BKP_bar	6180.0	R	Backup saturation probe {0}	WORD	-6.7...32.0	bar
BKP_Psi	6180.0	R	Backup saturation probe {0}	WORD	-67.0...320	Psi
rDP	6173.0	R	Dewpoint value	WORD	-67.0...320	°C/°F
dis	6159.0	R	Display value	WORD	-67.0...320	°C/°F
vr1	6160.0	R	Probe x calculating virtual probe	WORD	-67.0...320	°C/°F
vr2	6161.0	R	Probe x calculating virtual probe	WORD	-67.0...320	°C/°F
EEV	6177.0	R	valve 1 opening percentage	WORD	100.0	%
EEVmean	6179.0	R	Valve 1 opening average every 10 min	WORD	100.0	%
FrH	6176.0	R	Frame heater output	WORD	100.0	%
E1	6162.0	R	AI1 Probe Error	1 BIT	0...1	flag
E2	6162.1	R	AI2 Probe Error	1 BIT	0...1	flag
E3	6162.2	R	AI3 Probe Error	1 BIT	0...1	flag
E4	6162.3	R	AI4 Probe Error	1 BIT	0...1	flag
E5	6162.4	R	AI5 Probe Error	1 BIT	0...1	flag
E6	6162.5	R	AI6 Probe Error	1 BIT	0...1	flag
E7	6162.6	R	AI7 Probe Error	1 BIT	0...1	flag
AL1	6162.13	R	Low temperature 1 alarm	1 BIT	0...1	flag
AH1	6162.14	R	High temperature 1 alarm	1 BIT	0...1	flag
AL2	6162.15	R	Low temperature 2 alarm	1 BIT	0...1	flag
AH2	6163.0	R	High temperature 2 alarm	1 BIT	0...1	flag
OPd	6163.1	R	Door open alarm	1 BIT	0...1	flag
EA	6163.2	R	Digital input external alarm	1 BIT	0...1	flag
Prr	6163.3	R	Preheat Input Regulator Alarm	1 BIT	0...1	flag
Ad2	6163.4	R	Defrost timeout	1 BIT	0...1	flag
nPA	6163.5	R	Pressure switch alarm	1 BIT	0...1	flag
LPA	6163.6	R	Low pressure switch alarm	1 BIT	0...1	flag
HPA	6163.7	R	High pressure switch alarm	1 BIT	0...1	flag
E10	6163.8	R	RTC flat battery alarm	1 BIT	0...1	flag
AtS	6162.9	R	Communication test alarm	1 BIT	0...1	flag
HOt	6163.9	R	Valve MOP alarm	1 BIT	0...1	flag
tHA	6163.10	R	Valve output max alarm	1 BIT	0...1	flag
OFF	6167.0	R	stand-by	1 BIT	0...1	flag
C1	6167.1	R	Compressor 1 State	1 BIT	0...1	flag
C2	6167.2	R	Compressor 2 State	1 BIT	0...1	flag
RegAUX	6167.3	R	Auxiliary regulator state	1 BIT	0...1	flag
Def1	6167.4	R	Defrost 1 status	1 BIT	0...1	flag
Def2	6167.5	R	Defrost 2 status	1 BIT	0...1	flag
FEv	6167.6	R	Evaporator fan state	1 BIT	0...1	flag
FCo	6167.7	R	Condenser fan state	1 BIT	0...1	flag
ALM	6167.8	R	Alarm status	1 BIT	0...1	flag
AUX	6167.9	R	Auxiliary Relay	1 BIT	0...1	flag

LABEL	ADDRESS	R/W	DESCRIPTION	DATA SIZE	RANGE	MU
Lig	6167.10	R	Light state	1 BIT	0...1	flag
DP	6167.11	R	Deep Cooling	1 BIT	0...1	flag
FH	6167.12	R	Demisting heaters	1 BIT	0...1	flag
SeR	6167.13	R	Reduced Set regulator	1 BIT	0...1	flag
ES	6167.14	R	Energy saving	1 BIT	0...1	flag
do	6167.15	R	Door open alarm	1 BIT	0...1	flag
dyS	6168.0	R	Active dynamic setpoint	1 BIT	0...1	flag
gDI	6168.1	R	Generic input state	1 BIT	0...1	flag
LAN	6169.0	R	Number of devices recognised in the LAN	WORD	0...255	num
MOPac	6168.2	R	MOP intervention	1 BIT	0...1	flag
DeadRack	6168.3	R	DeadRack intervention	1 BIT	0...1	flag
ConMod	6168.4	R	Continuum valve modulation in execution	1 BIT	0...1	flag
nAU	2561.0	W	Auxiliary On	WORD	0...1	flag
oAU	2562.0	W	Auxiliary Off	WORD	0...1	flag
nSB	2563.0	W	Device On	WORD	0...1	flag
oSB	2564.0	W	Device Off	WORD	0...1	flag
nES	2565.0	W	Energy saving function activation	WORD	0...1	flag
oNS	2566.0	W	Disable energy saving function	WORD	0...1	flag
nSR	2567.0	W	Activate Economy mode	WORD	0...1	flag
oSR	2568.0	W	Deactivate Economy mode	WORD	0...1	flag
nLI	2569.0	W	Lights On	WORD	0...1	flag
oLI	2570.0	W	Lights Off	WORD	0...1	flag
nBT	2571.0	W	Keypad lock	WORD	0...1	flag
oBT	2572.0	W	Keypad unlock	WORD	0...1	flag
nDM	2573.0	W	Manual defrost activation	WORD	0...1	flag
oPV	2574.0	W	Valve opening command	WORD	0...1	flag
nPV	2575.0	W	Valve closing command	WORD	0...1	flag
nOS	2576.0	W	Setpoint offset forcing on	WORD	0...1	flag
oOS	2577.0	W	Setpoint offset forcing off	WORD	0...1	flag
dEC	2578.0	W	Deep Cool on	WORD	0...1	flag
ClkUp	2579.0	W	Update Clock	WORD	0...1	flag
FDRackON	2570.0	W	Dead rack intervention ON	WORD	0...1	flag
FDRackOFF	2570.0	W	Dead rack intervention OFF	WORD	0...1	flag

NOTES:

- If alarm exclusion times have been set (see “AL” folder in the parameters table) the alarm will not be indicated.
- With the exception of inoperable probe alarms, all other alarms will record the corresponding label in the folder **ALr** in the “**MACHINE STATUS**” menu (refer to **“6.7.7. Machine status menu” on page 58**).
- The probe not working alarms will be shown on the display via label E1, E2, E3, E4, E5, E6, E7, EL and Ei according to whether it is probe Pb1, Pb2, Pb3, Pb4, Pb5, Pb6, Pb7, Link[2] or Virtual.

Eliwell Controls s.r.l.
Via dell'Industria, 15 • Z.I. Paludi
32016 Alpago (BL) - ITALY
T: +39 0437 986 111
F: +39 0437 989 066

www.eliwell.com

Customer's Technical Support:
T: : +39 0437 986 300
E: Techsuppeliwell@schneider-electric.com

Sales:
T: +39 0437 986 100 (Italy)
T: +39 0437 986 200 (other countries)
E: saleseliwell@schneider-electric.com

MADE IN ITALY

code 9MA10277.03 • RTX-RTD 600 /V DOMINO • rel.04/18 • EN
© 2018 Eliwell 'All rights reserved'