EWCM 436D PRO / A-CRII

CRII series compressor rack controllers

User Manual

9MA10273.03
03/2024



www.eliwell.com

eliwell
by Schneider Electric

Legal Information

The information provided in this document contains general descriptions, technical characteristics and/or recommendations related to products/solutions.

This document is not intended as a substitute for a detailed study or operational and site-specific development or schematic plan. It is not to be used for determining suitability or reliability of the products/solutions for specific user applications. It is the duty of any such user to perform or have any professional expert of its choice (integrator, specifier or the like) perform the appropriate and comprehensive risk analysis, evaluation and testing of the products/solutions with respect to the relevant specific application or use thereof.

The Schneider Electric brand and any trademarks of Schneider Electric SE and its subsidiaries referred to in this document are the property of Schneider Electric SE or its subsidiaries. All other brands may be trademarks of their respective owner.

This document and its content are protected under applicable copyright laws and provided for informative use only. No part of this document may be reproduced or transmitted in any form or by any means (electronic, mechanical, photocopying, recording, or otherwise), for any purpose, without the prior written permission of Schneider Electric.

Schneider Electric does not grant any right or license for commercial use of the document or its content, except for a non-exclusive and personal license to consult it on an “as is” basis.

Schneider Electric reserves the right to make changes or updates with respect to or in the content of this document or the format thereof, at any time without notice.

To the extent permitted by applicable law, no responsibility or liability is assumed by Schneider Electric and its subsidiaries for any errors or omissions in the informational content of this document, as well as any non-intended use or misuse of the content thereof.

CONTENTS

CHAPTER 1. Introduction 11
1.1. General description 11
1.1.1. Main functions 11
CHAPTER 2. Mechanical installation 12
2.1. Before starting 12
2.2. Disconnection from the power supply 12
2.3. Operating environment 13
2.4. Comments concerning installation 13
2.5. SKP 10 installation 14
2.6. EWCM 436D PRO / A-CRII installation 15
CHAPTER 3. Electrical connections 18
3.1. Best wiring practices 18
3.1.1. Wiring guidelines 18
3.1.2. Rules for screw-type terminal boards 19
3.1.3. Protecting the outputs from damage from inductive loads 20
3.1.4. Specific considerations for handling 22
3.1.5. Analog inputs-probes 22
3.1.6. Serial connections 23
3.2. Electric diagrams 24
3.2.1. EWCM 436D PRO / A-CRII 24
3.2.2. Ground connection 25
3.2.3. Example of low voltage/low current input/output connection 26
3.2.4. Standard configuration of digital/analog inputs 29
3.3. Example of SKP 10 connection 29
3.3.1. SKP 10 29
CHAPTER 4. Technical data 30
4.1. General Specifications 31
4.2. I/O features 32
4.3. Serial ports 33
4.4. Power supply 33
4.5. Mechanical technical specifications 34

4.6. Mechanical dimensions 35
CHAPTER 5. User Interface (folder PAR/UI) 36
5.1. Keys 36
5.2. LEDs and Display 37
5.2.1. Display 37
5.2.2. LEDs 37
5.3. Startup 38
5.4. Access to folders - Menu structure 38
5.5. BIOS menu 38
5.5.1. BIOS “Status” menu 38
5.5.2. BIOS programming menu 42
5.5.3. Functions (FnC folder) 43
5.6. A/CRII application menu 44
5.6.1. A/CRII status menu 44
CHAPTER 6. Physical I/O configuration (PAR/CL folder) 47
6.1. Analog inputs 47
6.2. Digital inputs 48
6.3. Digital outputs 48
6.4. Analog outputs 48
CHAPTER 7. Device configuration (PAR/CnF...LEd folder) 50
7.1. Device configuration parameters 50
7.1.1. Type of refrigerant 50
7.1.2. Number of compressors - ON/OFF 51
7.1.3. Number of CRII compressor solenoid valves 51
7.1.4. Managing the digital and analog fans 51
7.1.5. Temperature probe enabling 51
7.2. I/O configuration parameters 52
7.2.1. Configuration of analog inputs 52
7.2.2. Configuration of analog outputs 52
7.2.3. Configuration of digital inputs 53
7.2.4. Digital output configuration 53
7.2.5. LED configuration 53
CHAPTER 8. Compressors 54
8.1. Type of compressors supported 54
8.2. System configurations supported 54

8.3. Overview of compressor control 54
8.3.1. CRII compressor on mode 55
8.3.2. Modulation of CRII valves and safety times 56
8.3.3. Single compressor switch-on mode 58
8.3.4. Switching off single compressors 59
8.3.5. Switching off the CRII compressor 59
CHAPTER 9. Fans (FAn) 60
9.1. System configurations supported 60
9.2. Digital fans 60
9.3. Analog fan 61
9.4. Floating condensation 61
9.4.1. Sub-cooling 62
CHAPTER 10. Parameters (PAR) 63
10.1. Parameters / visibility table, folder visibility table and client table 63
10.1.1. BIOS / visibility parameters table 65
10.1.2. Folder visibility table 68
10.1.3. Application parameters table 69
10.1.4. Client Table 76
CHAPTER 11. Alarms 79
11.1. Alarms table 79
11.2. Alarm log 80
CHAPTER 12. Updating the device 81
12.1. Direct connection with Device Manager 81
12.2. Connecting to UNICARD / MFK 82
12.3. Firmware updating 82
CHAPTER 13. Monitoring 83
13.1. Configuration with Modbus RTU 83
13.1.1. Data format (RTU) 83
13.1.2. Modbus commands available and data areas 84
13.2. Device address 84
13.2.1. List of parameter addresses 84
13.2.2. List of variable addresses / states 84

SAFETY INFORMATION

Important information

Read these instructions carefully and visually inspect the equipment to familiarize yourself with the device before attempting to install it, put it into operation or service it. The following warning messages may appear anywhere in this documentation or on the equipment to warn of potential dangers or to call attention to information that can clarify or simplify a procedure.



The addition of this symbol to a 'Danger' or 'Warning' safety label indicates that an electrical hazard exists which will result in personal injury if the instructions are not followed.



This is the safety warning symbol. It is used to warn the user of the potential dangers of personal injury. Observe all the safety warnings that follow this symbol to avoid the risk of serious injury or death.

⚠ DANGER

DANGER indicates a dangerous situation which, if not avoided, **will result** in death or serious injury.

⚠ WARNING

WARNING indicates a potentially dangerous situation which, if not avoided, **could result in** death or serious injury.

⚠ CAUTION

CAUTION indicates a potentially dangerous situation which, if not avoided, **could result** in minor or moderate injury.

NOTICE

NOTICE used in reference to procedures not associated with physical injuries.

PLEASE NOTE

Electrical equipment should be installed, operated, serviced, and maintained only by qualified personnel.
No responsibility is assumed by Schneider Electric and Eliwell for any consequences arising out of the use of this material.
An authorized person is someone in possession of the skills and knowledge applicable to the structure, to the operation of the electrical equipment and to its installation, and who has received safety training in order to recognize and avoid the risks involved.

Personnel qualification

Only personnel with suitable training and an in-depth knowledge and understanding of the contents of this manual and any other documentation relevant to the product are authorized to work on and with this product. Qualified personnel must be capable of identifying any dangers which may arise from the parameterization or changing of parameter values, and from the use of mechanical, electric and electronic equipment in general.
Plus, they must be familiar with the personal safety laws, provisions and regulations which must be observed during system planning and implementation.

Permitted use

This product is intended for controlling racks fitted with CRII type compressors.
The products described or mentioned in this document, besides software, accessories and optional extras, are controllers required for the use of compressor racks in accordance with the instructions, guidelines, examples and safety information contained in this document and other supporting documentation.
The product may only be used in compliance with all applicable laws and safety directives, the specified requirements and the technical data.
Before using the product, a risk assessment in the context of the planned application must be carried out. The appropriate safety measures must be implemented in line with the results.
Since the product is used as a component in a process or as part of a machine assembly, the safety of individuals must be guaranteed when planning the system as a whole.
Only use the product with the specified cables and accessories. Only use genuine accessories and spare parts.
Applications other than those expressly permitted are prohibited and may cause unforeseen risks.

Prohibited use

All uses other than that expressed above in Permitted use are strictly prohibited.

The relay contacts supplied are electromechanical and are subject to wear. The functional safety protection devices, specified by international or local laws, must be installed outside this device.

Liability and residual risks

The liability of Schneider Electric and Eliwell is limited to the correct and professional use of the product according to the directives referred to herein and in the other supporting documents, and does not cover any damage (including but not limited to) the following causes:

- unspecified installation/use and, in particular, in contravention of the safety requirements of the legislation in force in the country of installation and/or specified in this document;
- use on equipment which does not provide adequate protection against electrocution, water and dust in the actual installation conditions;
- use on devices which allow access to dangerous parts without the aid of a keyed or tooled locking mechanism;
- product tampering and/or alteration;
- installation/use on equipment that does not comply with the regulations in force in the country of installation.

Disposal



The equipment (or product) must be subjected to separate waste collection in compliance with local legislation regarding waste disposal.

INFORMATION ABOUT...

Purpose of the document

This document describes the **EWCM 436D PRO / A-CRII** controllers and accessories, including information regarding installation and wiring.

NOTE: Before proceeding with the installation, use or maintenance of the controller, read this document and all related documents carefully.

Note regarding validity

This document is valid for **EWCM 436D PRO / A-CRII** msk 635.

The characteristics described in this manual should be the same as those which can be found online.

In accordance with our policy of continuous improvement, the content of the documentation may be revised from time to time in order to improve its clarity and accuracy. If there are any differences between the manual and the online information, the online information takes priority.

Related documents

Document title	Reference document code
User manual EWCM 436D PRO / A-CRII	9MA10273 (IT) 9MA10273 (EN) 9MA50273 (DE) 9MAA0273 (RU)
Instruction sheet EWCM 436D PRO / A-CRII	9IS54502

You can download these technical publications and other technical information from our website at:
www.eliwell.com

Product related information

⚠ ⚠ DANGER

HAZARD OF ELECTRIC SHOCK, EXPLOSION OR ARC FLASH

- Disconnect all power from all equipment including connected devices prior to removing any covers or doors, or installing or removing any accessories, hardware, cables or wires except under the specific conditions specified in this hardware guide.
- Always use a properly rated voltage sensing device to confirm the power is off where and when indicated.
- Before restoring the power supply, replace and secure all covers, hardware components and cables.
- For all the devices requiring it, make sure there is an effective ground connection.
- Use only the specified voltage when operating this device and any associated products.

Failure to follow these instructions will result in death or serious injury.

This equipment is designed to operate in non-hazardous locations and where applications which generate (or could potentially generate) hazardous environments have been isolated. Install this equipment only in areas and with applications known to be constantly free from hazardous atmospheres.

⚠ DANGER

POTENTIAL FOR EXPLOSION

- Install and use this equipment in non-hazardous locations only.
- Do not install or use this equipment in applications which could generate hazardous atmospheres, such as applications which use flammable refrigerants.

Failure to follow these instructions will result in death or serious injury.

For information regarding the use of control equipment in applications capable of generating hazardous materials, please contact the relevant national regulatory bodies or certifying authorities.

⚠ ⚠ DANGER

HAZARD OF ELECTRIC SHOCK AND FIRE

- Do not expose the equipment to liquids.
- Do not exceed the temperature and humidity ranges defined in the technical specification.

Failure to follow these instructions will result in death or serious injury.

⚠ ⚠ DANGER

HAZARD OF OVERHEATING AND/OR FIRE

- Do not use with loads other than those indicated in the technical specification.
- Do not exceed the maximum permitted current; for higher loads, use a meter with sufficient power capacity.

Failure to follow these instructions will result in death or serious injury.

⚠ WARNING

LOSS OF CONTROL

- The control system designer must consider the potential failure modes of the control circuit and, for some critical control functions, provide a means for reaching a safe condition during and after a circuit failure. Examples of critical control functions are the emergency stop and end of travel stop, power supply cut-off and restart.
- Separate or redundant control circuits must be provided for critical control functions.
- The system control circuits can include communication connections. Keep in mind the implications of transmission delays or sudden connection failures.
- Comply with all standards regarding accident prevention and local applicable safety directives.(1)
- Every implementation of this equipment must be tested individually and completely in order to check its proper operation before it is commissioned.

Failure to follow these instructions can result in death, serious injury, or equipment damage.

(1) For additional information, refer to the standards NEMA ICS 1.1 (latest edition), “Safety Guidelines for the Application, Installation, and Maintenance of Solid State Control” and NEMA ICS 7.1 (latest edition) “Safety Standards for Construction and Guide for Selection, Installation and Operation of Adjustable-Speed Drive Systems” or to equivalent standards that regulate your particular location.

⚠ WARNING

UNINTENDED EQUIPMENT OPERATION

- Only use Eliwell-approved software in conjunction with this equipment.
- Update your application program every time you change the physical configuration of the hardware.

Failure to follow these instructions can result in death, serious injury, or equipment damage.

CHAPTER 1
Introduction

1.1. General description

The **EWCM 436D PRO** / A-CRII controller is the compact parametric solution from **Eliwell** which is suitable for controlling racks equipped with CRII type compressors.

NOTE: The photographs in this manual are provided purely for demonstration purposes. The dimensions shown in the figures are not to scale.

The **EWCM 436D PRO** / A-CRII range includes:

- **Controller**
- **SKP 10 remote display**

1.1.1. Main functions

- Suction pressure control via a CRII compressor and up to max. 4 single compressors;
- Control up to 3 CRII valves;
- Discharge pressure control via digital fans or analog output for inverter control;
- Floating condensation;
- Complete diagnostics, alarm log;
- Parameter settings via keyboard or PC;
- **MFK / UNICARD** to upload and download parameter maps;
- Analog inputs which can be configured via NTC parameter, 0…20 mA, 4...20 mA, 0...1 V, 0...5 V, 0...10 V or digital inputs;
- RS485 serial and Modbus RTU supervision protocol;
- **Optional remote display** (cable up to 10 m - 32.8 ft) which may be connected up directly without a serial interface.

CHAPTER 2
Mechanical installation

2.1. Before starting

Before starting to install the system, read this chapter carefully. Take particular care to comply with all information relating to safety, various electrical requirements and legal regulation which could apply to your machine or your process if using this equipment. The use and application of the information contained in this document require experience in the design and programming of automated control systems. Only the user, machine manufacturer or integrator can be familiar with all the process conditions and can therefore establish which automation and associated equipment and related safety devices and interlocks can be used efficiently and correctly. When choosing the automation and control equipment - and any other related equipment or software - for a particular application, you must also take account of all applicable local, regional or national standards and/or regulations.

⚠ WARNING

REGULATORY INCOMPATIBILITY

Make sure that all equipment used and systems designed comply with all applicable local, regional and national laws.

Failure to follow these instructions can result in death, serious injury, or equipment damage.

2.2. Disconnection from the power supply

All optional elements and modules must be assembled and installed before installing the control system on an assembly rail, panel door or other assembly surface. Before dismantling the equipment, remove the control systems from the assembly rail, plate or panel.

⚠ ⚠ DANGER

HAZARD OF ELECTRIC SHOCK, EXPLOSION OR ARC FLASH

- Disconnect all power from all equipment including connected devices prior to removing any covers or doors, or installing or removing any accessories, hardware, cables or wires except under the specific conditions specified in this hardware guide.
- Always use a properly rated voltage sensing device to confirm the power is off where and when indicated.
- Before restoring the power supply, replace and secure all covers, hardware components and cables.
- For all the devices requiring it, make sure there is an effective ground connection.
- Use only the specified voltage when operating this device and any associated products.

Failure to follow these instructions will result in death or serious injury.

2.3. Operating environment

This equipment is designed to operate in non-hazardous locations and where applications which generate (or could potentially generate) hazardous environments have been isolated. Install this equipment only in areas and with applications known to be constantly free from hazardous atmospheres.

⚠ DANGER

POTENTIAL FOR EXPLOSION

- Install and use this device in non-hazardous locations only.
- Do not use this device in applications which could produce hazardous atmospheres, such as applications which use flammable refrigerants.

Failure to follow these instructions will result in death or serious injury.

For information regarding the use of control equipment in applications capable of generating hazardous materials, please contact the relevant national regulatory bodies or certifying authorities.

⚠ WARNING

UNINTENDED EQUIPMENT OPERATION

Install and use the equipment in compliance with the conditions described in the general technical specifications.

Failure to follow these instructions can result in death, serious injury, or equipment damage.

2.4. Comments concerning installation

⚠ WARNING

UNINTENDED EQUIPMENT OPERATION

- Use appropriate safety interlocks where personnel and/or equipment hazards exist.
- Install and operate this equipment in an enclosure appropriately rated for its intended environment and secured by a keyed or tooled locking mechanism.
- Power line and output circuits must be wired and fused in compliance with local and national regulatory requirements for the rated current and voltage of the particular equipment.
- Do not use this equipment for safety-critical functions.
- Do not disassemble, repair, or modify this equipment.

Failure to follow these instructions can result in death, serious injury, or equipment damage.

For mechanical sizes see **4.6. Mechanical dimensions page 35**.
EWCM 436D PRO / A-CRII controllers are designed for assembly on DIN rail.

Take care to avoid damage from electrostatic charge sources when handling this equipment. In particular, exposed connectors and in some cases exposed circuit boards are vulnerable to electrostatic discharge.

⚠ WARNING

UNINTENDED EQUIPMENT OPERATION DUE TO ELECTROSTATIC DISCHARGE

- Keep the equipment in the protective packaging until ready for installation.
- The equipment must only be installed in type-approved casing and/or in points that prevent accidental access and provide protection from electrostatic discharge.
- When handling sensitive equipment, use an antistatic bracelet or equivalent earthed protective device against electrostatic discharge.
- Before handling the equipment, always discharge the static electricity from the body by touching an earthed surface or type-approved antistatic mat.

Failure to follow these instructions can result in death, serious injury, or equipment damage.

2.5. SKP 10 installation

The remote display is designed for panel mounting

1. Make a 71x29 mm hole (2.80x1.14 in.).
2. Insert the instrument.
3. Fix it using the brackets supplied.

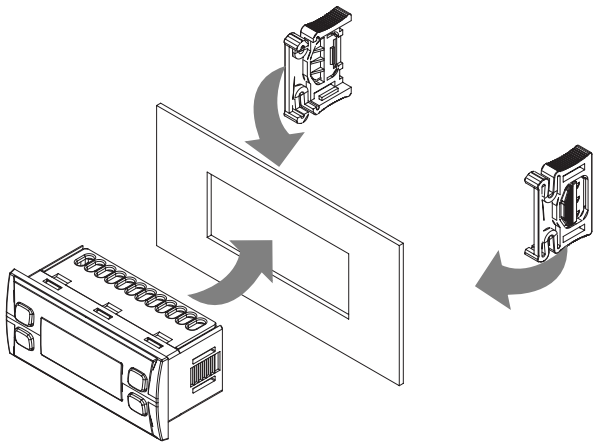

Fig. 1. Installation example

2.6. EWCM 436D PRO / A-CRII installation

The instrument is designed for 4DIN rail mounting.
Follow the instructions below for installation on DIN rail:

1. move the two spring docking devices to their standby position (use a screwdriver to press against the relative compartments).
2. Then install the instrument on the DIN rail,
3. pressing on the “spring docking devices” to put them into the locked position.

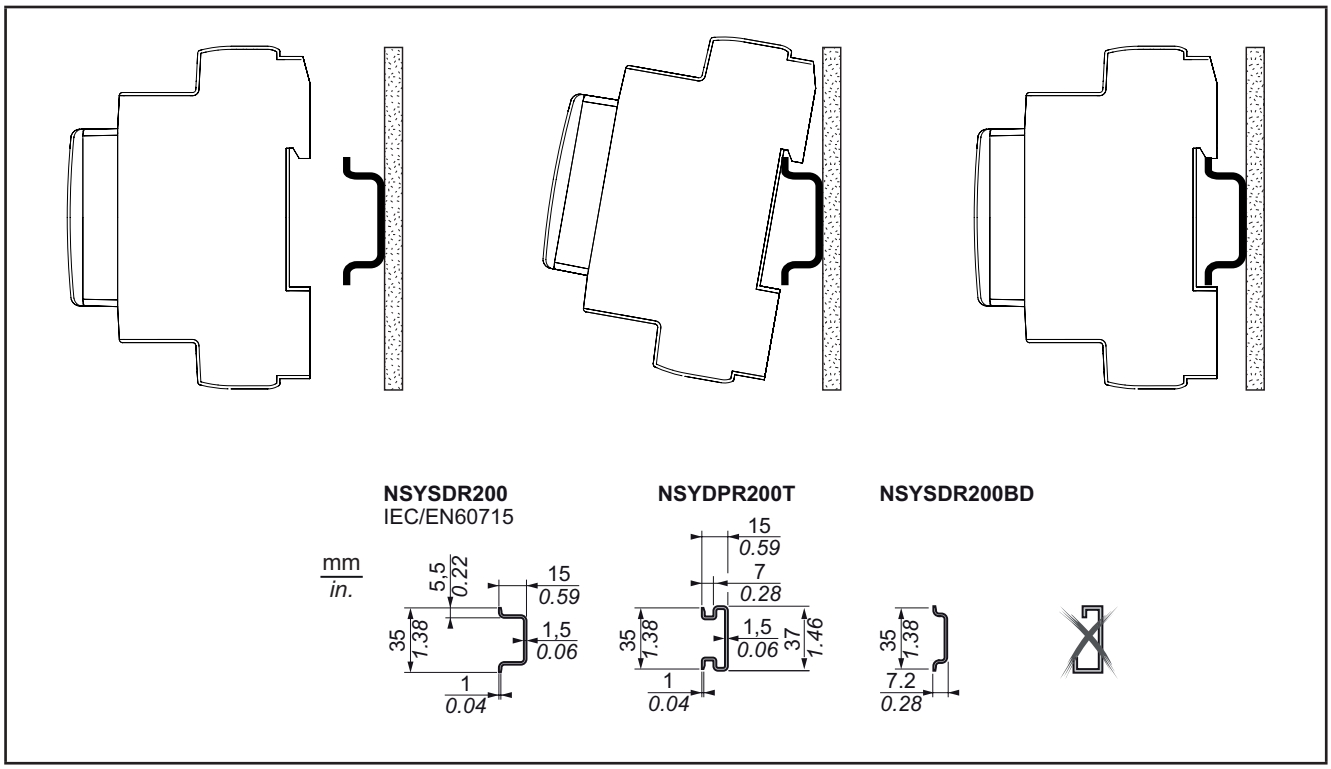

Fig. 2. DIN rail installation – side view

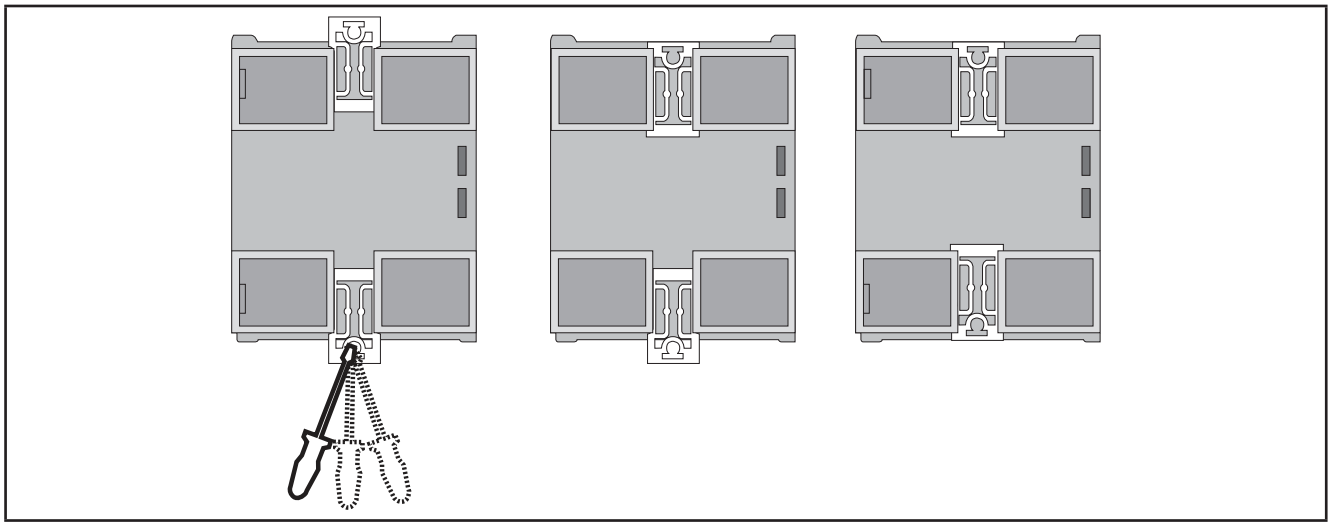

Fig. 3. DIN rail installation - rear view

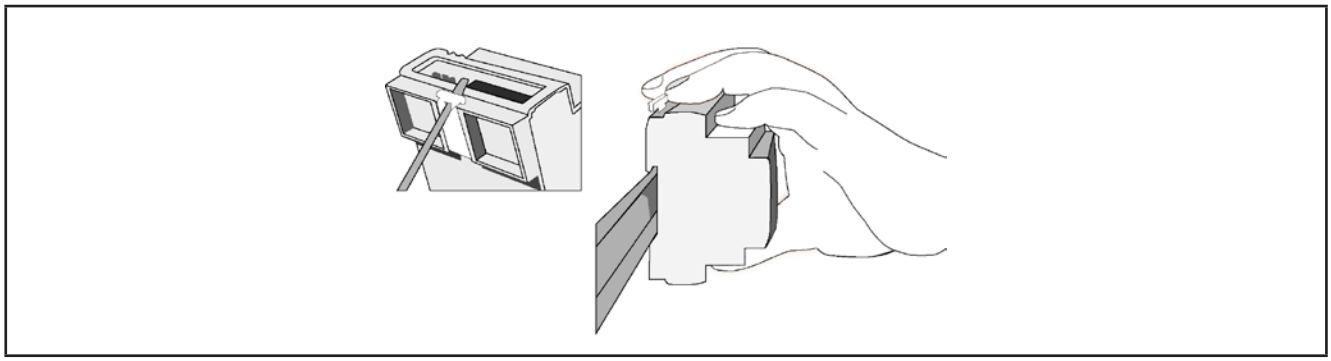

Fig. 4. DIN rail installation – ¾ view

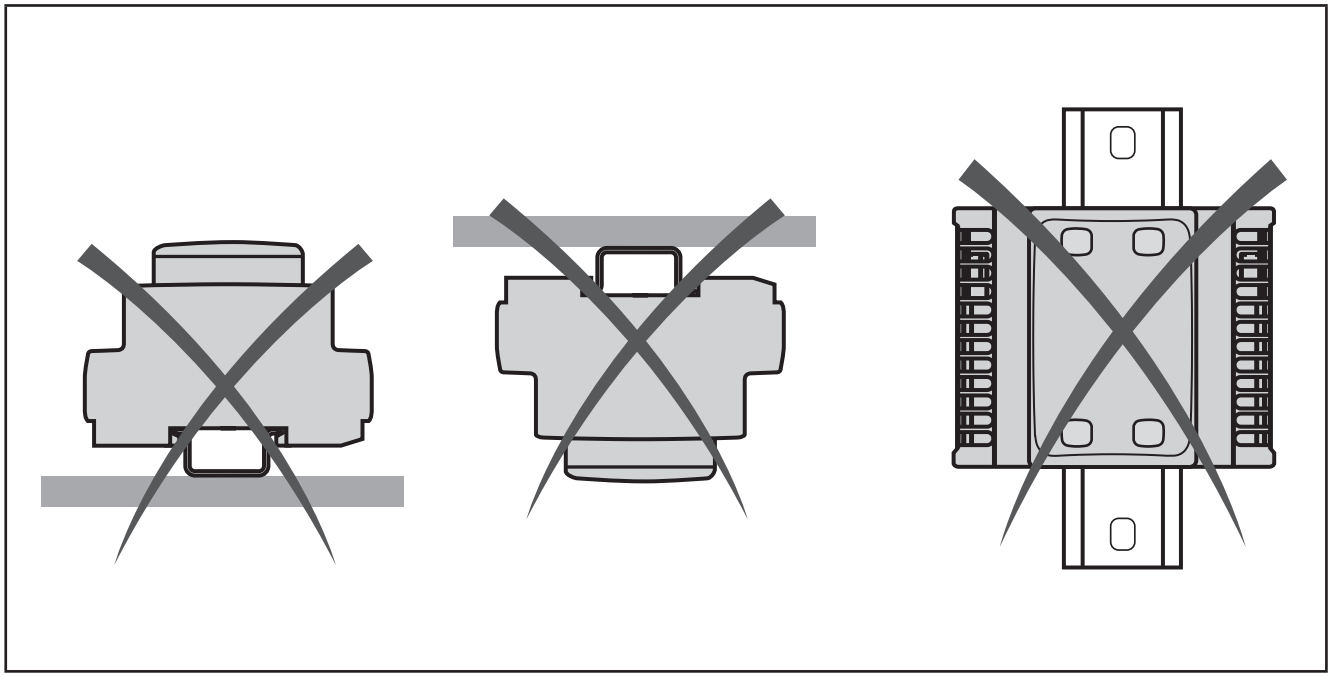

Fig. 5. DIN rail mount

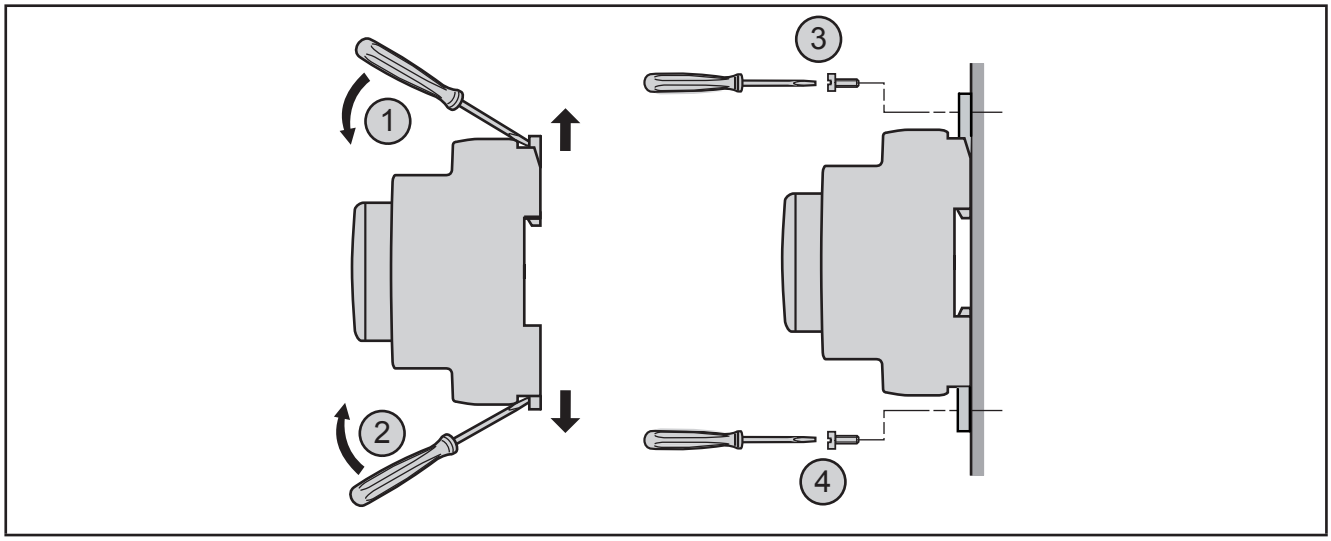

Fig. 6. Panel mount

⚠ WARNING

UNINTENDED EQUIPMENT OPERATION

- Place the devices dissipating the most heat at the top of the cabinet and ensure suitable ventilation.
- Do not place this equipment near or above any devices which could cause overheating.
- Install the device in a point that guarantees the minimum distances from all structures and adjacent equipment as indicated in this document.
- Install all equipment in conformity with the technical specifications given in the corresponding documentation.

Failure to follow these instructions can result in death, serious injury, or equipment damage.

The **EWCM 436D PRO / A-CRII** controller is designed as a class IP20 product and should be installed in a cabinet suitably classified for its intended environment and protected by a key or locking mechanism.
There are 3 types of distance to be observed, including:

- The **EWCM 436D PRO / A-CRII** controller and all sides of the cabinet (including the panel door).
- The terminal blocks for the **EWCM 436D PRO / A-CRII** controller and the cable ducts. This distance reduces electromagnetic interference between the controller and the cable ducts.
- The **EWCM 436D PRO / A-CRII** controller and other devices that generate heat installed in the same cabinet.

The figure below shows the minimum spacing distance to be applied:

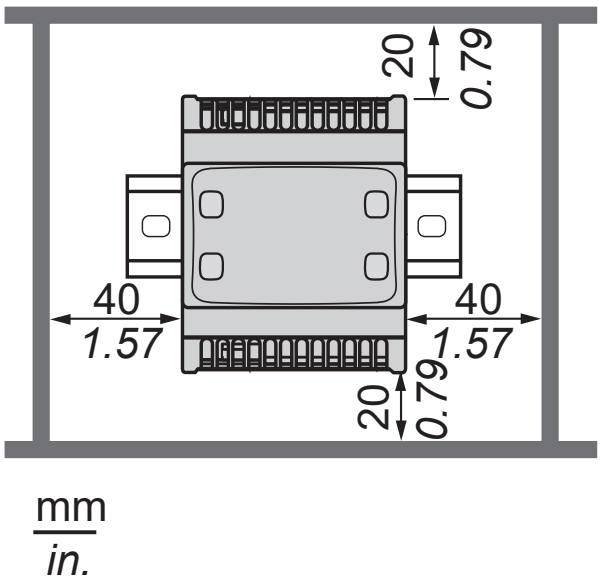

Fig. 7. Distances

CHAPTER 3
Electrical connections

3.1. Best wiring practices

The following information describes the wiring guidelines and the best practices to follow when using the **EWCM 436D PRO** compressor rack controllers.

⚠ ⚠ DANGER

HAZARD OF ELECTRIC SHOCK, EXPLOSION OR ARC FLASH

- Disconnect all power from all equipment including connected devices prior to removing any covers or doors, or installing or removing any accessories, hardware, cables or wires except under the specific conditions specified in this hardware guide.
- Always use a properly rated voltage sensing device to confirm the power is off where and when indicated.
- Before restoring the power supply, replace and secure all covers, hardware components and cables.
- For all the devices requiring it, make sure there is an effective ground connection.
- Use only the specified voltage when operating this device and any associated products.

Failure to follow these instructions will result in death or serious injury.

⚠ WARNING

LOSS OF CONTROL

- The control system designer must consider the potential failure modes of the control circuit and, for some critical control functions, provide a means for reaching a safe condition during and after a circuit failure. Examples of critical control functions are the emergency stop and end of travel stop, power supply cut-off and restart.
- Separate or redundant control circuits must be provided for critical control functions.
- The system control circuits can include communication connections. Keep in mind the implications of transmission delays or sudden connection failures.
- Comply with all standards regarding accident prevention and local applicable safety directives.(1)
- Every implementation of this equipment must be tested individually and completely in order to check its proper operation before it is commissioned.

Failure to follow these instructions can result in death, serious injury, or equipment damage.

(1) For additional information, refer to the standards NEMA ICS 1.1 (latest edition), “Safety Guidelines for the Application, Installation, and Maintenance of Solid State Control” and NEMA ICS 7.1 (latest edition) “Safety Standards for Construction and Guide for Selection, Installation and Operation of Adjustable-Speed Drive Systems” or to equivalent standards that regulate your particular location.

3.1.1. Wiring guidelines

Apply the following rules when wiring:

- The I/O and communication wiring must be kept separate from the electrical wiring. These two types of wiring must be kept in separate raceways.
- Make sure that the operating conditions and surroundings comply with the specification values.
- Use wires of the correct diameter and suited to the voltage and current requirements.
- Use copper conductors (obligatory).
- Use twisted-pair wires for analog I/Os.

- Use twisted-pair shielded wires for networks and field buses.

Use correctly earthed shielded wires for all analog high-speed inputs and outputs and communication connections. If shielded wires cannot be used for these connections, the electromagnetic interference may deteriorate the signal. Deteriorated signals can result in the controller, modules or attached equipment operating incorrectly.

⚠ WARNING

UNINTENDED EQUIPMENT OPERATION

- Use shielded wires for all analog I/O and communication signals.
- Earth the wire shields for all analog I/O, high-speed I/O and communication signals in a single point [1].
- Lay the communication and I/O cables separately from the power cables.
- Reduce the length of the connections as much as possible and avoid winding them around electrically connected parts.

Failure to follow these instructions can result in death, serious injury, or equipment damage.

[1] Earthing in several points is permitted if the connections are made to an equipotential earth surface that is sized to avoid damage to the cable shields in the event of a short circuit in the power supply.

NOTE: Lay the main wiring (power wires) separately from the secondary wiring (very low voltage wire coming from intermediate power sources). Where this is not possible, double insulation is required in the form of cable recesses or raceways.

3.1.2. Rules for screw-type terminal boards

The table below illustrates the types of cables and wire cross-sections for a screw-type terminal board with **5.08** or **5.00 spacing**:

mm / in. 7 / 0.28								
mm²	0.2…2.5	0.2…2.5	0.25…2.5	0.25…2.5	2 x 0.2…1	2 x 0.2…1.5	2 x 0.25…1	2 x 0.5...1.5
AWG	*24…14*	*24…14*	*22...14*	*22...14*	*2 x 24…18*	*2 x 24…16*	*2 x 22…18*	*2 x 20...16*

Ø 3,5 mm (*0.14 in.*)	C	N•m	0.5...0.6
		lb-in	*4.42...5.31*

Fig. 8. Spacing 5.08 mm (0.20 in.) or 5.00 mm (0.197 in.)

The table below illustrates the types of cables and wire cross-sections for a screw-type terminal board with **3.81** or **3.50 spacing**:

mm / in. 9 / 0.35								
mm²	0.14…1.5	0.14…1.5	0.25…1.5	0.25…0.5	2 x 0.08…0.5	2 x 0.08…0.75	2 x 0.25…0.34	2 x 0.5
AWG	*26…16*	*26…16*	*22...16*	*22...20*	*2 x 28…20*	*2 x 28…20*	*2 x 24…22*	*2 x 20*

Ø 2,5 mm (*0.1 in.*)	C	N•m	0.22...0.25
		lb-in	*1.95...2.21*

Fig. 9. Spacing 3.81 mm (0.15 in.) or 3.50 mm (0.14 in.)

Copper conductors must be used.

⚠ ⚠ DANGER

LOOSE WIRING CAN RESULT IN ELECTRIC SHOCK

- Tighten the connections in compliance with the technical specifications for torque values.
- Do not insert more than one wire per terminal board connector unless you are using the lugs (ferrules) specified above.

Failure to follow these instructions will result in death or serious injury.

⚠ DANGER

FIRE HAZARD

- Use only the recommended wire cross-sections for the current capacity of the I/O channels and the electrical power.
- For wiring a 2 A relay output, use conductors with a cross-section of at least 0.5 mm^2 (AWG 20) with a nominal temperature value of at least 80°C (176°F).
- For wiring a 3 A relay output, use conductors with a cross-section of at least 1.5 mm^2 (AWG 16) with a nominal temperature value of at least 80°C (176°F).
- For common relay output wiring of 8 A or relay output wiring over 3 A, use conductors with a cross-section of at least 2.0 mm^2 (AWG 12) with a nominal temperature value of at least 80°C (176°F).

Failure to follow these instructions will result in death or serious injury.

3.1.3. Protecting the outputs from damage from inductive loads

Depending on the load a protection circuit may be required for controller outputs and certain modules. Inductive load switching may create voltage impulses that damage or short circuit or reduce the life of the output devices.

⚠ CAUTION

DAMAGE TO OUTPUT CIRCUITS DUE TO INDUCTIVE LOADS

Use an external protective device or circuit able to reduce the risks caused by voltage impulses in the switching of inductive loads.

Failure to follow these instructions can result in injury or equipment damage.

If the controller or module has relay outputs, these types of outputs can cope with up to 240 Vac. Damage from inductive loads to these types of outputs can cause the contacts to weld and lead to the loss of control. Each inductive load must include a protective device such as a peak limiter, an RC circuit or a flyback diode. These relays do not support capacitive loads.

⚠ WARNING

RELAY OUTPUTS WELDED TO CLOSED POSITION

- Always protect the relay outputs from damage resulting from alternating current inductive loads using a suitable external protective device or circuit.
- Do not connect the relay outputs to capacitive loads.

Failure to follow these instructions can result in death, serious injury, or equipment damage.

Protection circuit A: this protection circuit can be used for both direct and alternating current load circuits.

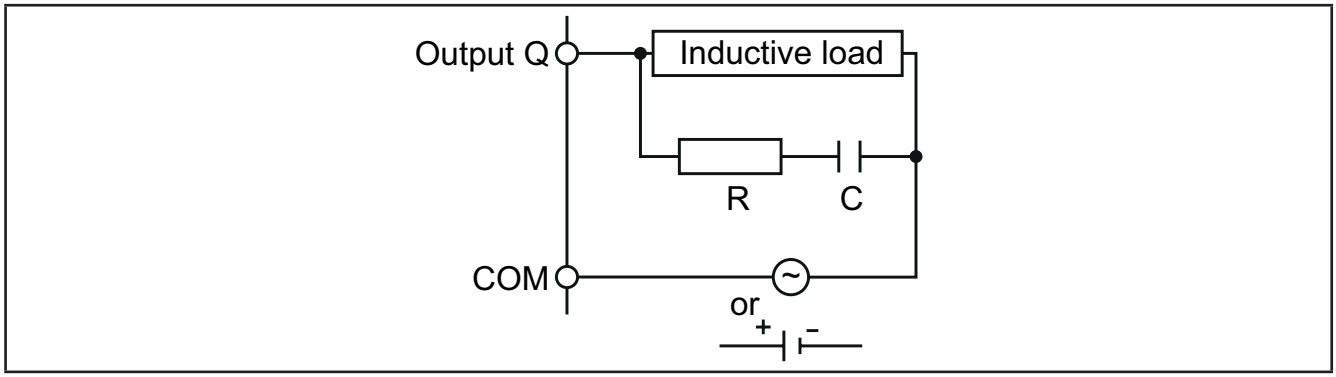

Fig. 10. Protection circuit A

C Value from 0.1 to 1 µF
R Resistor with approximately the same load resistance value

Protection circuit B: this protection circuit can be used for direct current load circuits.

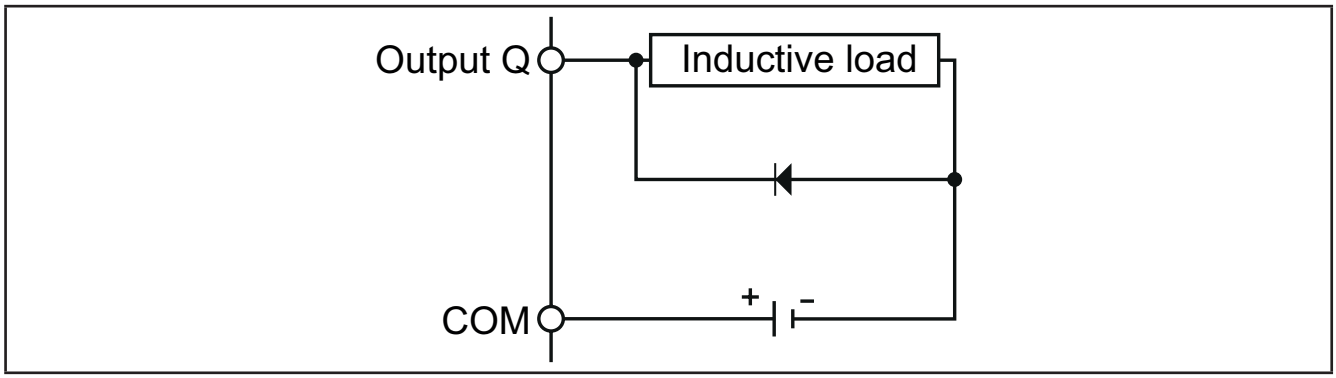

Fig. 11. Protection circuit B

Use a diode with the following nominal characteristics:
- Maximum inverse voltage: load circuit voltage x 10.
- Direct current: greater than the load current.

Protection circuit C: this protection circuit can be used for both direct and alternating current load circuits.

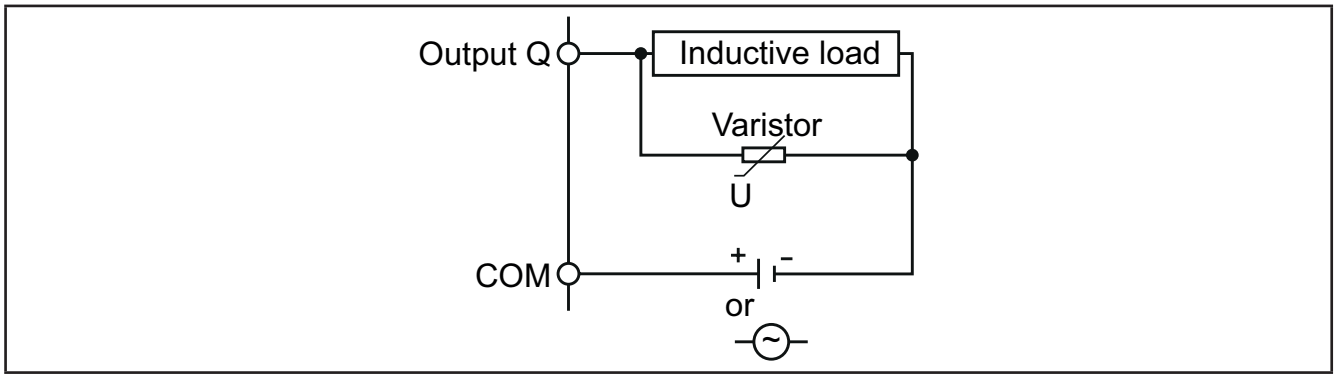

Fig. 12. Protection circuit C

In applications in which the inductive load is frequently and/or rapidly switched on and off, check that the maximum continuous energy (J) of the varistor is 20% or more higher than the peak load energy.

NOTE: Place the protection devices as close as possible to the load.

3.1.4. Specific considerations for handling

When handling the equipment, take care to avoid damage caused by electrostatic discharge. In particular, the unshielded connectors and in certain cases the open circuit boards are extremely vulnerable to electrostatic discharge.

⚠ WARNING

UNINTENDED EQUIPMENT OPERATION DUE TO ELECTROSTATIC DISCHARGE

- Keep the equipment in the protective packaging until ready for installation.
- The equipment must only be installed in type-approved casing and/or in points that prevent accidental access and provide protection from electrostatic discharge.
- When handling sensitive equipment, use an antistatic bracelet or equivalent earthed protective device against electrostatic discharge.
- Before handling the equipment, always discharge the static electricity from the body by touching an earthed surface or type-approved antistatic mat.

Failure to follow these instructions can result in death, serious injury, or equipment damage.

3.1.5. Analog inputs-probes

Probes have no connection polarity and can be extended (note that the extension of the probes influences the instrument's EMC electromagnetic compatibility: take great care with the wiring).
Check the polarity of the probes according to a specific connection polarity.

⚠ WARNING

UNINTENDED EQUIPMENT OPERATION

The device's signal cables (probes, digital inputs, communication, and relative power supplies), must be laid separately from the power cables.

Failure to follow these instructions can result in death, serious injury, or equipment damage.

NOTICE

INOPERABLE DEVICE

- Before switching on the electrical power, check all the wiring connections.
- Do not insert more than one wire per terminal board connector unless you are using the lugs (ferrules) specified above.

Failure to follow these instructions can result in equipment damage.

NOTE: apply the electrical power supply to all externally powered devices after applying the electrical power to the **EWCM 436D PRO** controllers

3.1.6. Serial connections

TTL

Use a 5-wire TTL cable up to 3 m (118 in.) in length.

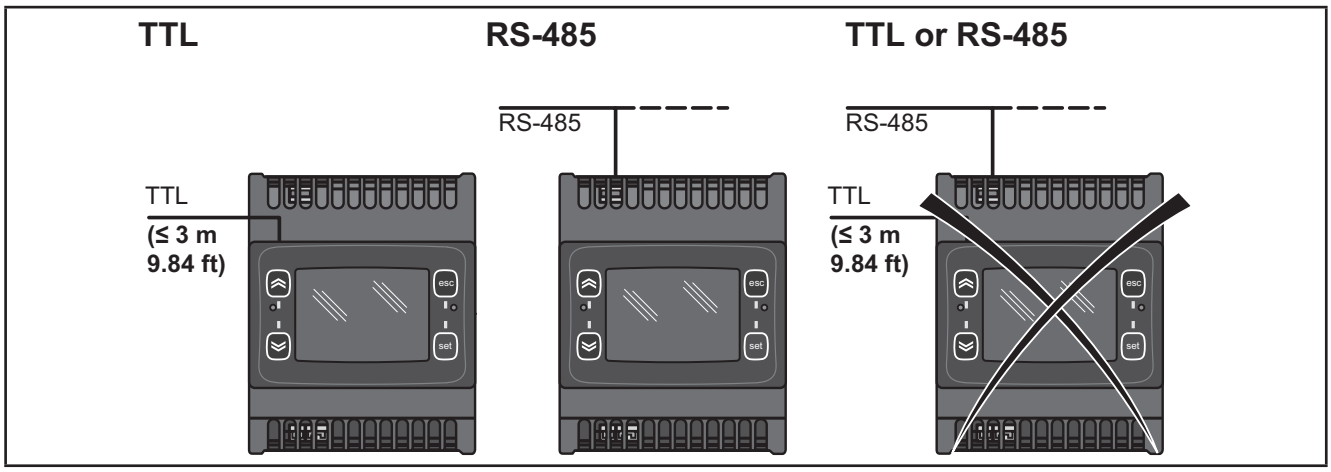

Fig. 13. Serial connection: TTL / RS485

NOTICE
INOPERABLE DEVICE
Only connect the RS485 serial or the TTL (for UNICARD/DMI/MFK).
Failure to follow these instructions can result in equipment damage.

3.2. Electric diagrams

Incorrect wiring will cause irreversible damage to the controllers.

NOTICE
INOPERABLE DEVICE Before switching on the electrical power, check all the wiring connections. **Failure to follow these instructions can result in equipment damage.**

3.2.1. EWCM 436D PRO / A-CRII

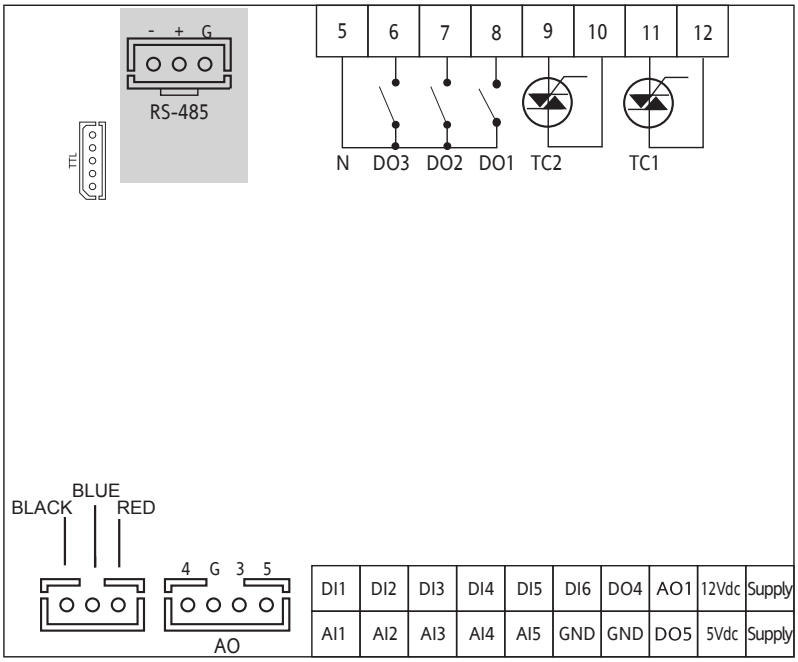

Fig. 14. EWCM 436D PRO

3 digital outputs with hazardous voltage 2 A 240 Vac	[DO1, DO2, DO3]
6 analog outputs	2 analog outputs with hazardous voltage 2 A 240 Vac [TC1 TC2]
	1 Open Collector PPM/PWM low voltage analog output (SELV (§)) [AO1]
	3 low voltage (SELV (§)) analog outputs [AO3-4-5] • 2 x 0...10 V [AO3-4] outputs • 1 x 4…20 mA/0…20 mA output [AO5]
6 digital inputs	[DI1…DI6]
3 NTC* / Digital*** inputs	[AI1, AI2, AI5]
2 NTC / voltage, current** / Digital*** inputs	[AI3, AI4]
2 low voltage Open Collector outputs (SELV (§))	[DO4] [DO5]

*Type SEMITEC 103AT (10 kΩ / 25°C)
**0…20 mA / 4…20 mA current input or 0…5 V / 0…10 V / 0…1 V voltage input
***voltage-free digital input
(°) closing current for 0.5 mA ground
(§) SELV: (SAFETY EXTRA LOW VOLTAGE)

POWER SUPPLY	12...24 Vac
5 Vdc	Auxiliary power supply 5 Vdc 20 mA max.
12 Vdc	Auxiliary power supply 12 Vdc 70 mA max.
N	Neutral
BLACK-BLUE-RED	**SKP 10** (max. 10 m - 32.8 ft)
TTL	TTL serial connection for **MFK** or **UNICARD**
RTC	RTC supplied as standard
RS485	RS485 serial on board for connection to supervisor

3.2.2. Ground connection

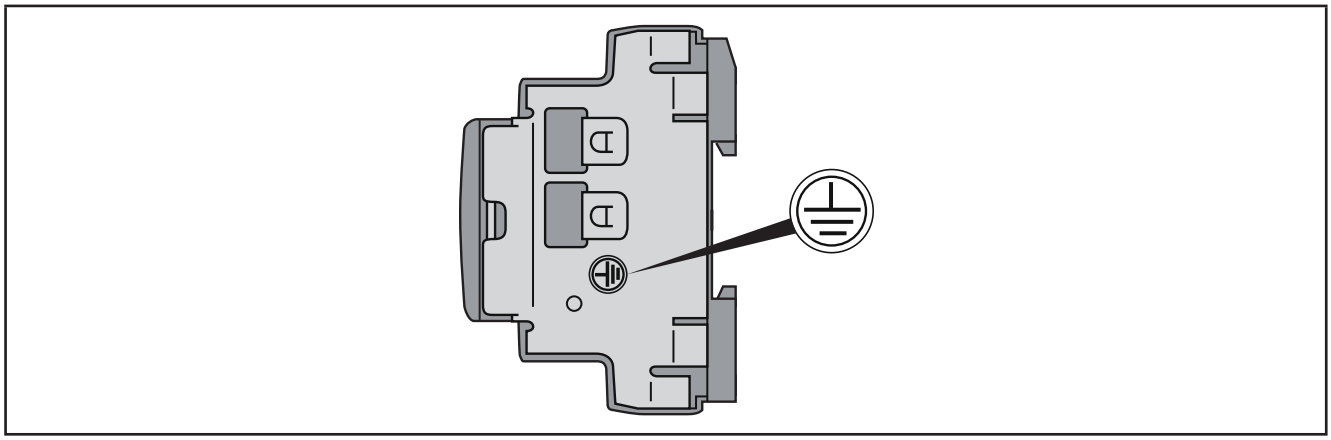

Fig. 15. EWCM 436D PRO ground

⚠ ⚠ DANGER

RISK OF ELECTRIC SHOCK

The ground connection on the device side must be used to establish a grounding offering permanent protection.

Failure to follow these instructions will result in death or serious injury.

3.2.3. Example of low voltage/low current input/output connection

Example of current/voltage input connection

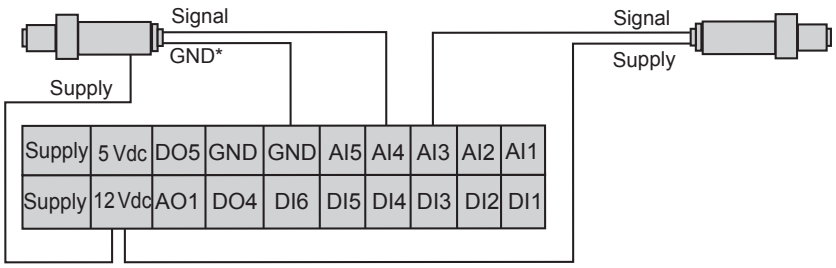

Fig. 16. Current input connection

NOTE: * 3-wire model only.

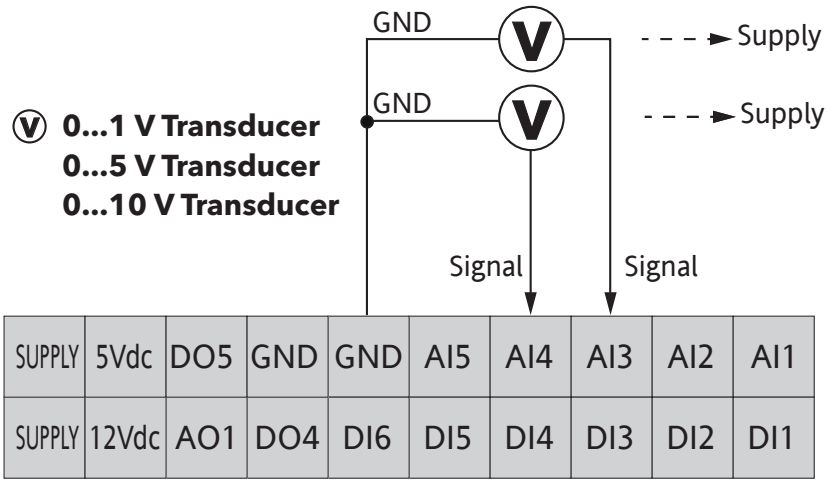

Fig. 17. Voltage input connection

NOTE: Supply: transducer power supply from **EWCM 436D PRO** / A-CRII (5 Vdc or 12 Vdc).
For more information refer to the transducer technical data sheet.

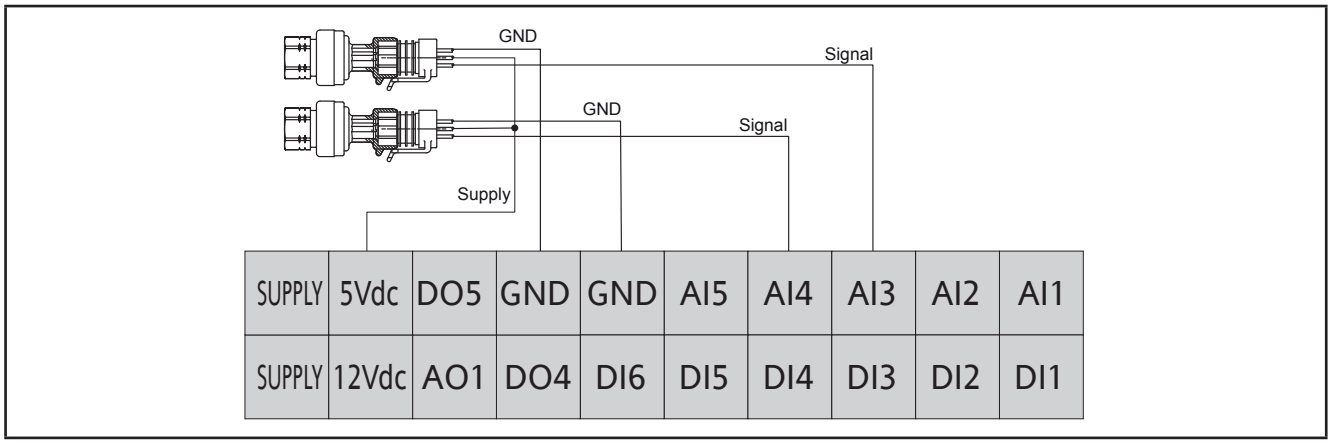

Fig. 18. Voltage connection of ratiometric inputs 0...5 V

Example of analog/digital input connection

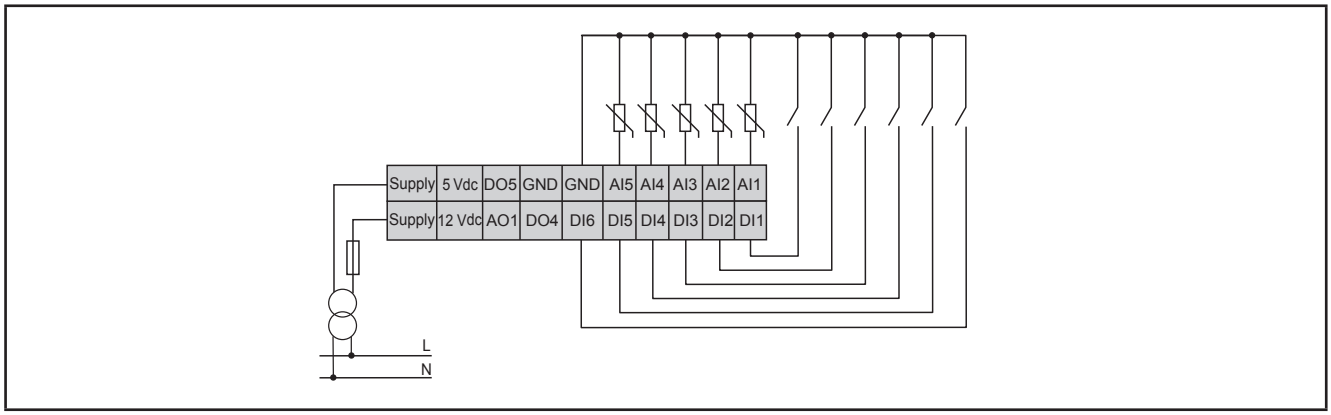

Fig. 19. Example of analog/digital input connection

Example of AO1 connection

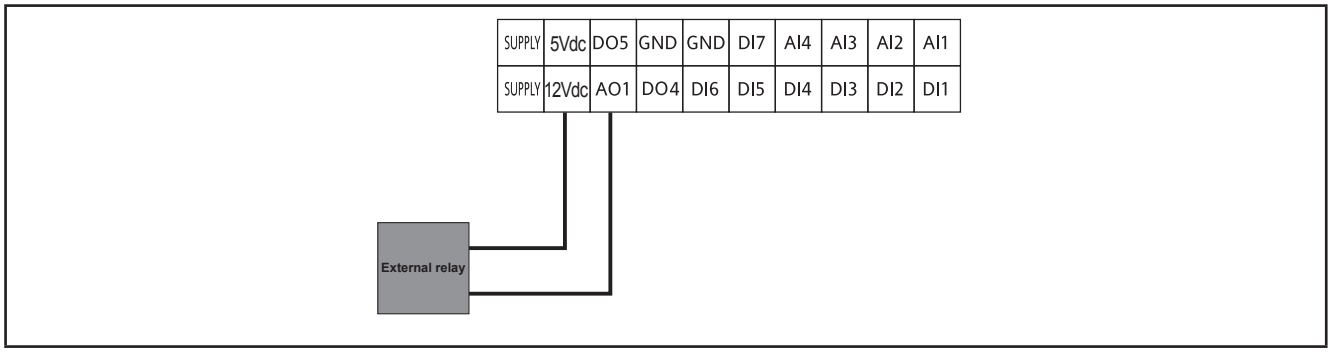

Fig. 20. Example of AO1 connection with an external relay

Example of AO3-AO4 / AO5 connection

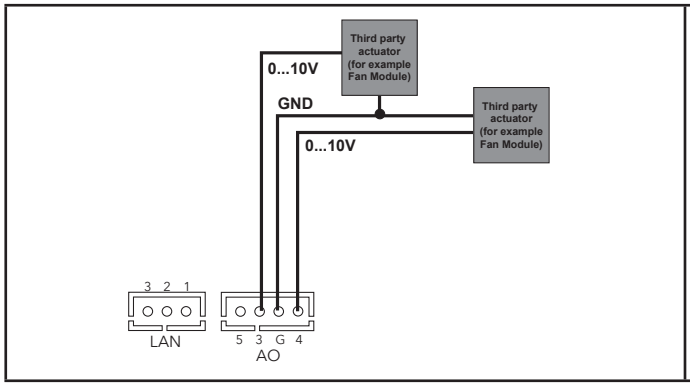

Fig. 21. Example of EWCM 436D PRO / A-CRII (AO3-AO4) connection with 1 x 0...10 V fan module

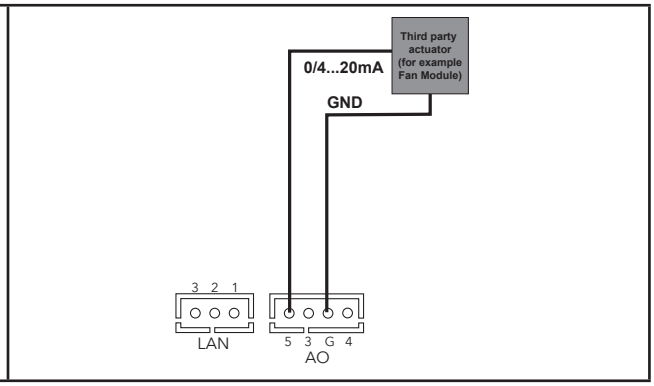

Fig. 22. Example of EWCM 436D PRO / A-CRII (AO5) connection with 1 0…20 mA / 4…20 mA fan module

Example of DO5 connection

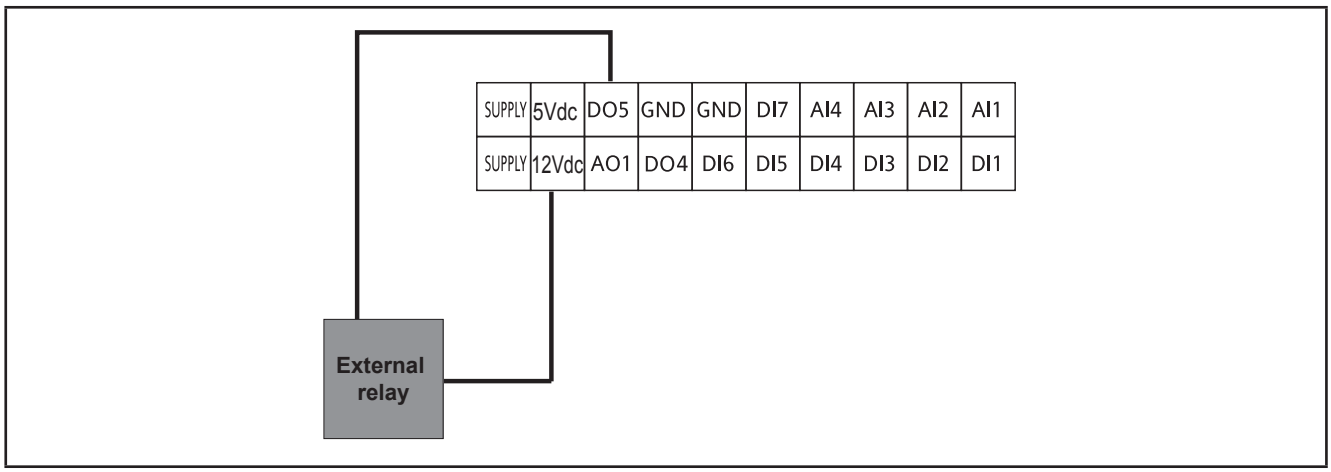

Fig. 23. Example of DO5 connection with an external relay

3.2.4. Standard configuration of digital/analog inputs

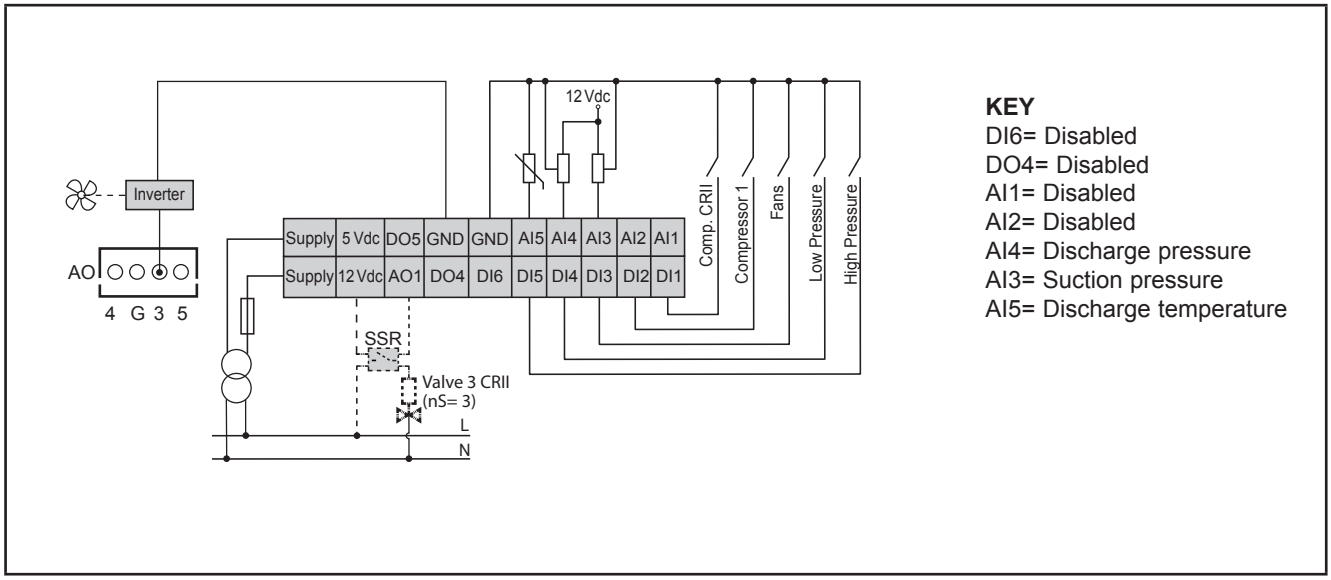

Fig. 24. Standard configuration of digital/analog inputs

3.3. Example of SKP 10 connection

NOTE: The max. distance of the wiring is 10 m - 32.8 ft.

3.3.1. SKP 10

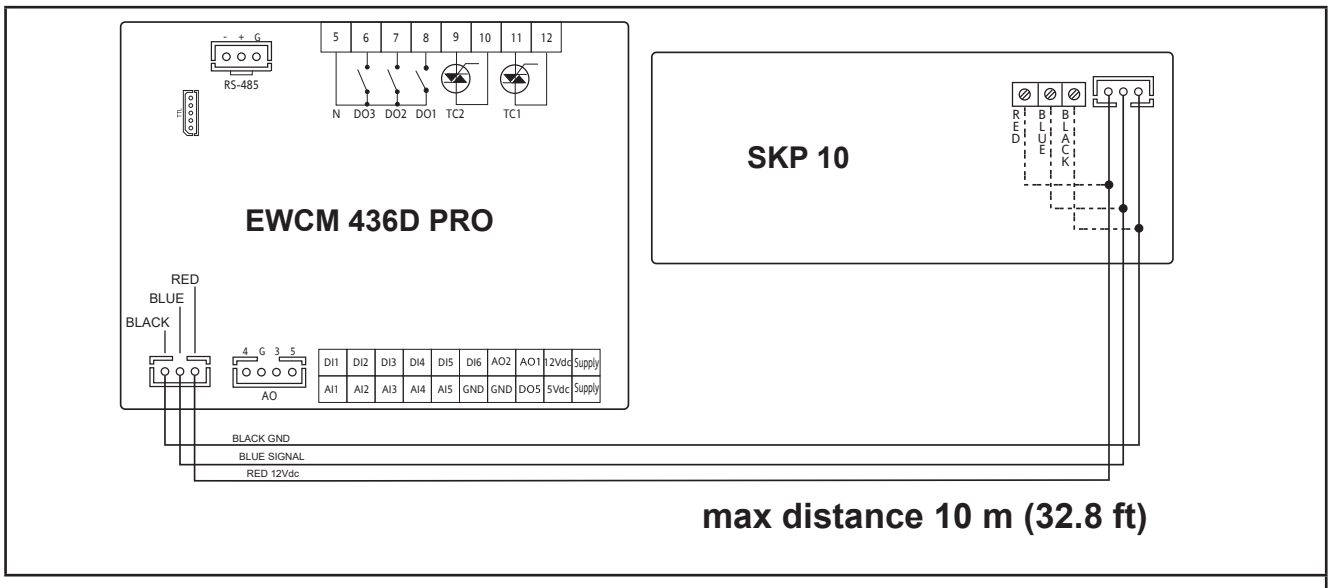

Fig. 25. Connection of EWCM 436D PRO / A-CRII - SKP 10

CHAPTER 4
Technical data

All components in the **EWCM 436D PRO / A-CRII** controllers system meet the European Community (CE) requirements for open devices. They must be installed in a casing or other designated place to suit the environmental conditions and minimize the risk of involuntary contact with high voltages. Use metal casings to improve the immunity of the **EWCM 436D PRO** system to electromagnetic fields. This equipment meets the CE requirements indicated in the table below.

⚠ WARNING

UNINTENDED EQUIPMENT OPERATION

Do not exceed any of the nominal values specified in this chapter.

Failure to follow these instructions can result in death, serious injury, or equipment damage.

The application of incorrect current and voltage values to the controller inputs and outputs may damage the electronic circuit. Moreover, connecting a current output device to an analog input configured for voltage and vice-versa will also damage the electronic circuit.

NOTICE

INOPERABLE DEVICE

- Do not apply voltages above 11 Vdc to the analog inputs on the controller or the inputs/outputs expansion module when the analog input is configured as a 0...10 V input.
- Do not apply currents over 30 mA to the controller analog inputs or the input/output expansion module when the analog input is configured as an input 0...20 mA or 4...20 mA.
- Make sure that the signal applied corresponds to the analog input configuration.

Failure to follow these instructions can result in equipment damage.

4.1. General Specifications

EN60730 General Specifications	
Max. power absorbed	6 VA max.
Software class	A
Overvoltage category	II
Insulating material class	IIIa
Front panel environmental protection	Open type / Tipo aperto
Rated voltage	12...24 Vac (±10%), 50/60 Hz
Control device purpose	Operating control (not safety) device
Control device construction	Built-in electronic control device
Type of load and rated current	RELAY: Resistive 2 A maximum, 240 Vac maximum TRIAC: Resistive 2 A 240 Vac
Protection rating provided by outer casing	IP20
Terminals which can be connected to external wires, indicating whether they are suitable for phase, neutral or both	See 3.1.2. Rules for screw-type terminal boards page 19
Environmental operating conditions	-20...65°C (-4…149°F) 10…90 % RH (non-condensing)
Assembly surface temperature limits	90°C
Electric shock protection	Class II control designed for use in class I equipment.
Mounting method	DIN rail mount
Control device grounding method	See 3.2.2. Ground connection page 25
Transportation and storage conditions	-40...85°C (-22…185°F) 10…90 % RH (non-condensing)
Type of action	1.C (relay) - 1 (triac)
Operating time	Long period (EN60730/UL60730)
Pollution class	2
Nominal pulse voltage	2500 V

4.2. I/O features

Type and Label	Description
Digital inputs DI1 ... DI6	6 voltage-free digital inputs Closure current for ground: 0.5 mA.
Hazardous voltage digital outputs DO1 ... DO3	3 relays 2 A 240 Vac
TC1, TC2	TRIAC 2 A 240 Vac Resolution: 1% Remote control switches downstream from the TRIAC are NOT permitted
Low voltage analog outputs (SELV) PWM/PPM OC AO1	PWM/PPM Open Collector outputs Accuracy: 2% Nominal range 0…16.9 Vdc (12 Vac rectified) Closure at 12 Vdc * Max. current 35 mA* (minimum load resistance 340 Ω at 12 Vdc)
Low voltage (SELV) analog outputs AO3, AO4	0...10 V outputs max. 28 mA** at 10 V (minimum load resistance 360 Ω) Precision 2% of integral scale Resolution: 1%
AO5	1 x 4..20 mA / 0…20 mA output Precision 2% of integral scale Resolution: 1% • 0/4…20 mA output, maximum load resistance 350 Ω**
Analog inputs AI1 ... AI5	See tables (**Analog inputs**)
Open Collector low voltage (SELV) digital output DO4, DO5	2 Open Collector outputs * Maximum current 35 mA* at 12 Vdc

* The outputs AO1, AO2 and DO5 (usually connected to the device's auxiliary 12 Vdc output) cannot deliver more than 70 mA in all. Also consider any other loads connected to the same 12 Vdc auxiliary output.

If the **SKP 10** keypad is connected to the device, the current becomes 55 mA.

**Outputs AO3, AO4 and AO5 cannot deliver more than 40 mA total.

Analog inputs

	NTC (103AT) 10 kΩ at 25°C	Current 0...20 mA 4...20 mA	Voltage 0...10 V	Voltage 0...5 V	Voltage 0...1 V	DI
AI1	✓	-	-	-	-	✓
AI2	✓	-	-	-	-	✓
AI3	✓	✓	✓	✓	✓	✓
AI4	✓	✓	✓	✓	✓	✓
AI5	✓	-	-	-	-	✓
Range	-50…100°C	-	-	-	-	-
Accuracy	1% integral scale	1% integral scale	1% integral scale	1% integral scale	2% integral scale	
Resolution	0.1°C	0.1	0.1	0.1	0.1	
Input impedance	10 kΩ	100 Ω	21 kΩ	110 kΩ	110 kΩ	

NOTE: DI: Digital input with voltage-free contact.
Probes NOT included - contact the Eliwell Sales Office for accessories.

4.3. Serial ports

	Label	Description
Serial ports	**TTL**	1 TTL serial for connection to programming key (**MFK / UNICARD**) or Personal Computer via suitable interface module (**DMI**)
	RS485	Opto-isolated RS485 serial port

4.4. Power supply

The electrical power supplies must be classified Safety Extra Low Voltage (SELV) according to IEC 61140. These electrical power sources are isolated between the input and output electrical circuits of the power supply and are separated by ground (earth), PELV systems and other SELV systems.

⚠ ⚠ DANGER

GROUND RING CAUSING ELECTRIC SHOCK AND/OR EQUIPMENT MALFUNCTION

- Do not connect the connection to 0 V on the power supply/transformer powering this equipment to an external earth connection (ground).
- Do not connect the connection to 0 V or earth (ground) on the sensors and actuators connected to this device to an external ground connection.
- If necessary, use separate power supplies/transformers to power the sensors and actuators isolated from this equipment.

Failure to follow these instructions will result in death or serious injury.

In all cases, if the specified voltage field is not maintained, the products may not work as intended. Use the required safety interlocks and voltage monitoring circuits.

⚠ WARNING

POTENTIAL OF OVERHEATING AND FIRE

- Do not connect the equipment directly to line voltage.
- Only use Class 2 transformers/power supplies with SELV isolated voltage for supplying power to the equipment.

Failure to follow these instructions can result in death, serious injury, or equipment damage.

The equipment must be connected to an appropriate power supply/transformer with the following characteristics:

Power supply frequency	50/60 Hz
Power supply unit power	6 VA minimum

NOTICE

INOPERABLE DEVICE

Power the device only with alternating current.

Failure to follow these instructions can result in equipment damage.

4.5. Mechanical technical specifications

	Description
	Terminals and connectors
Hazardous voltage	1 x 8-way high voltage male connector Use in combination with the female connector supplied
Low voltage	1 low voltage snap-on 20 way connector Use with **COLV0000E0100**
	1 x 4-way connector Use with **COLV000042100**
RS485 serial	1 x 3-way connector Use with **COLV000035100**
	Container
	PC+ABS plastic resin with V0 flammability rating

4.6. Mechanical dimensions

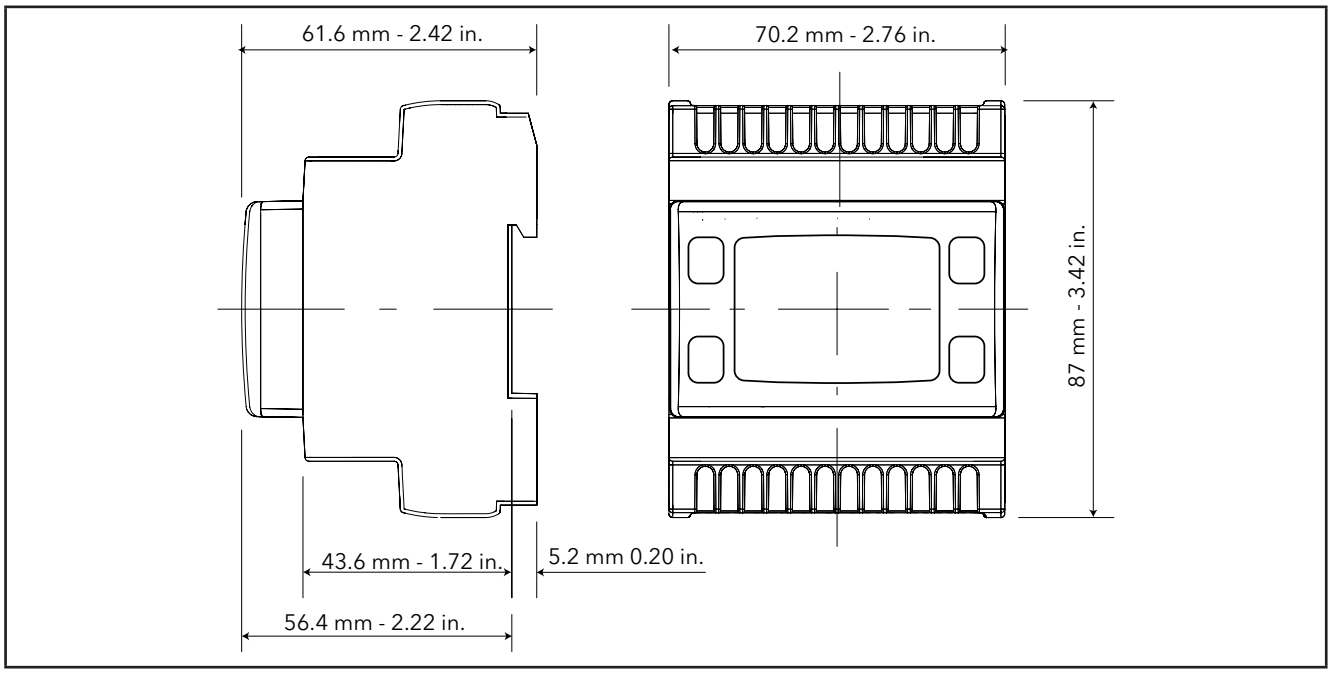

Fig. 26. EWCM 436D PRO

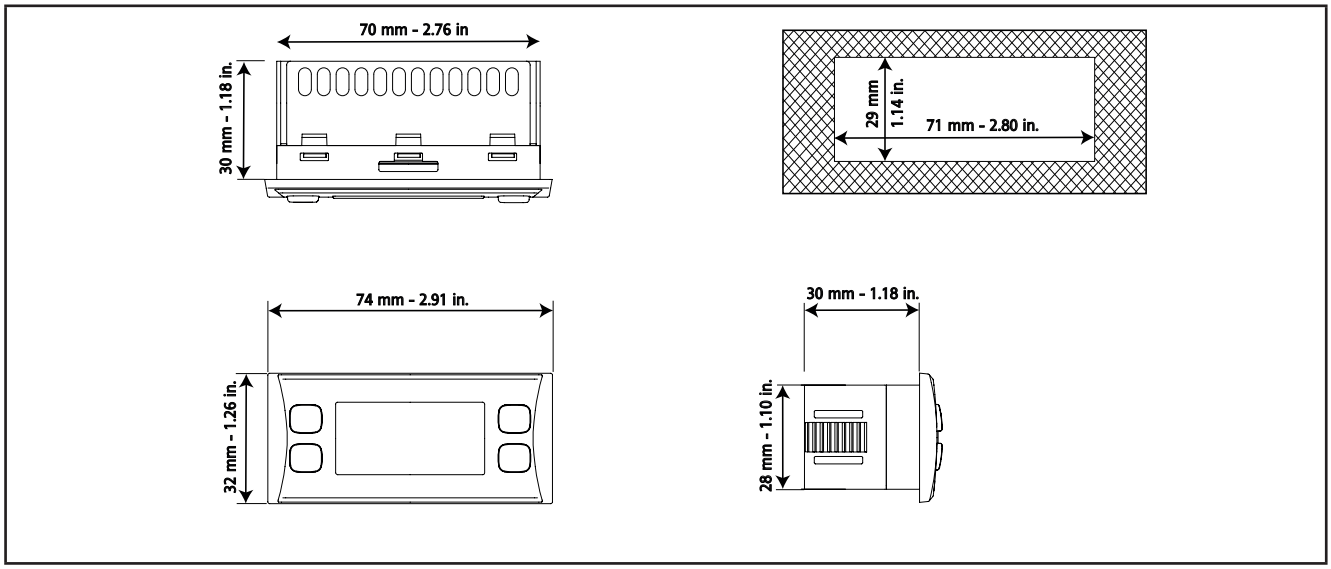

Fig. 27. SKP 10

CHAPTER 5
User Interface (folder PAR/UI)

The user interface, comprising the front cover of the controller, allows you to perform all operations needed to use the device.

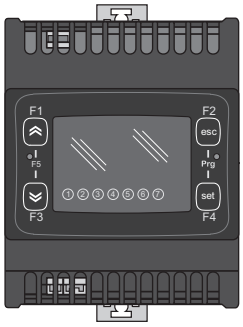

Fig. 28. EWCM 436D PRO



Fig. 29. SKP 10

5.1. Keys

Key	Single press (press and release)	Function key
⌃⌃ **UP**	• Increase a value • Go to next label • Changes the display from suction to discharge on the main screen	**F1** **[press for Ui26 seconds] to reset alarm history**
DOWN ⌄⌄	• Decrease a value • Go to previous label • Changes the display from suction to discharge on the main screen	**F3**
esc	• Exit without saving new settings • Go back to previous level • Changes the display from °C to bar on the main screen	**F2** (*)
set	• Confirm value / exit and save new settings • Move to next level (open folder, subfolder, parameter, value) • Open Status Menu	**F4**
[F1+F3]	Allows switching between the BIOS menu and the A-CRii application menu and vice-versa on the display	**F5**
[F2+F4]	Open programming menu	**Prg**

(*) The display on the main screen can also be switched between °C and bar from SKP 10 by pressing the esc key (**F2**) on the keypad for at least 3 seconds.

5.2. LEDs and Display

The display has 18 icons (LEDs) split into 3 categories:

- Statuses and Operating Modes
- Values and Units of Measure
- Utilities

5.2.1. Display

The display shows the value/resource set for the “main display”.
Values of up to 4 digits or 3 digits plus sign can be displayed.

5.2.2. LEDs

Status and Operating Mode LEDs	Icons	Description	Color
 If there is an alarm, the Alarm icon lights up.		Alarm	Red
		Main display of values read by the discharge probe.	Green
		Main display of values read by the suction probe.	
		Stand-by	
		Not used	
		Floating condensation enabled	

Unit of measure LED	Icons	Description	Color
		Clock (RTC)	Red
		Temperature (°C)	
		Pressure (bar)	
	%	Relative humidity RH% or % of analogue output	
	ABC	Menu (ABC)	

Utilities LED	Icons	Description	Color	Default	Configuration
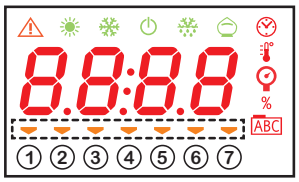		Utility	Amber yellow	CRII compressor drive	① Configured via parameter **01u**
				CRII capacity 1	② Configured via parameter **02u**
				CRII capacity 2	③ Configured via parameter **03u**
				Compressor 1	④ Configured via parameter **04u**
				Digital Fan 1	⑤ Configured via parameter **05u**
				Digital Fan 2	⑥ Configured via parameter **06u**
				Analog Fan 1	⑦ Configured via parameter **07u**

5.3. Startup

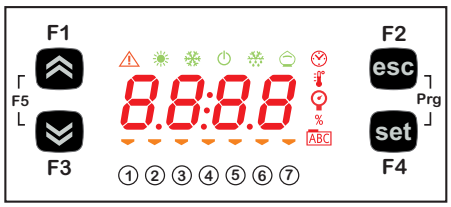

When the controller is switched on, an icon test is carried out to check their status and ensure they are working properly.
The icon test continues for a few seconds. During this period, all the icons and digits flash at once.

When the controller is switched on the adjustment is always active. On the main screen the device presents the suction probe value in “bar”.
The user can edit the main screen; see 5.1. Keys page 36
If the instrument is in stand-by it will show “OFF”.

5.4. Access to folders - Menu structure

Folders are organized into menus.
Access is defined by the keys on the front cover (see **5.1. Keys page 36**).
The method for accessing the different menus is described below (or in the chapters indicated).

The device has two menus:
- BIOS menu, for the “native” configuration of the controller (I/O, various peripherals)
  - Probe configuration parameters
  - Communication parameters
  - Input and output statuses
- A/CRII application menu

Press F1 + F3 at the same time to access the BIOS menu and to return to the A/CRII application menu.

5.5. BIOS menu

EWCM 436D PRO / A-CRII has a BIOS menu to manage the “Status” and “Programming” menu.

5.5.1. BIOS “Status” menu

The resource values can be viewed in the status menu.

Label							Description	Edit
Ai	AiL1	AiL2	AiL3	AiL4	AiL5	/	CONTROLLER analog inputs	/
di	diL1	diL2	diL3	diL4	diL5	diL6	Digital inputs	/
AO	tCL1	AOL1	AOL2	AOL3	AOL4	AOL5	Analog outputs	/
dO	dOL1	dOL2	dOL3	dOL4	dOL5	/	Digital outputs	/
CL	HOUr	dAtE	YEAr	/	/	/	Clock	Yes

Viewing Inputs/Outputs (Ai, di, AO, dO)

View Inputs/Outputs

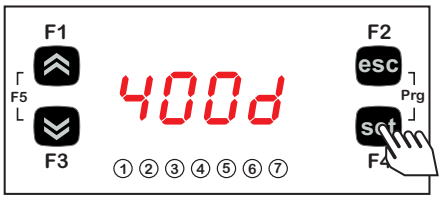

To view the inputs/outputs, from the main screen press **set**.

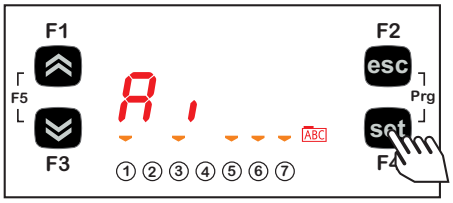

Example of Analog input display. For the other I/O* the same procedure is used**
Press **set** once to access a list of the various folders.
Label Ai appears on the display.

(Use **UP** and **DOWN** to scroll through the other labels to find the one required).

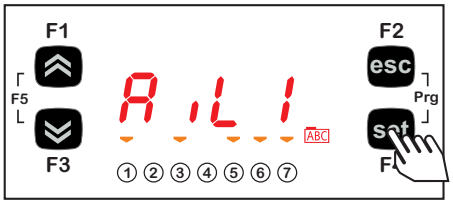

Press the **set** key to view the label for the first analog input (AiL1 in this case).

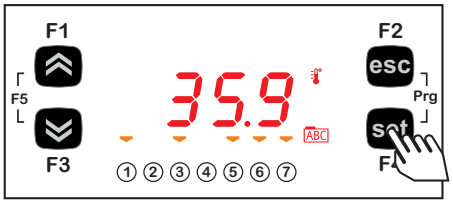

Press the **set** key again to view the value of AiL1. Note: the icon lights up to indicate that the value shown is in degrees centigrade.

Press the **esc** key to return to the main display.

***For digital inputs / analog inputs configured as digital, the value will be:

Value	Input	For a digital input this is equivalent to	For the analog inputs configured as digital this is equivalent to
0	not active	input open	input short circuited to ground
1	active	input short circuited to ground	input open

Setting the clock (CL)

EWCM 436D PRO / A-CRII has a clock (RTC) used to manage the alarm log as a programmable timer thermostat.
The instructions on how to set the time are given below: the same procedure can be used to edit the date and year.

Clock settings

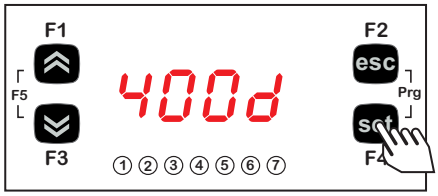

To change the time on your machine, starting from the display, press **set**.

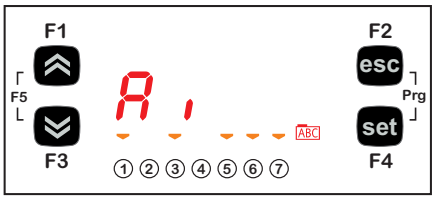

Press **set** once to access a list of the various folders.
Scroll through the menu using the **UP** and **DOWN** keys until you locate the CL folder.



Press the **set** key to open the CL menu.

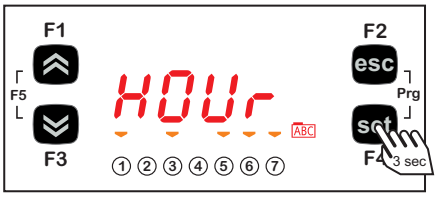

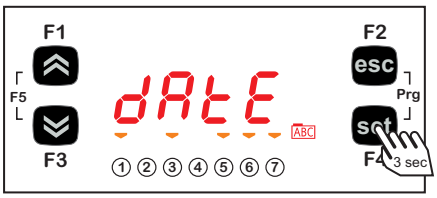

Once in you will see HOUr. Use **UP** and **DOWN** to set the time, date or year.

Once you have decided what you want to set, press and hold the **set** key for at least 3 seconds to enter the editing menu for the selected variable.

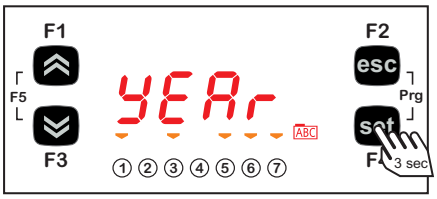

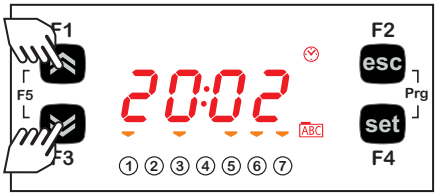

To set the time, date and year, use **UP** and **DOWN** to find the chosen value.



Press **set**.



To exit the time and date settings and return to the main screen, press **esc**.

5.5.2. BIOS programming menu

Parameters	PAr	CL	CF	Ui	---
Functions	FnC	---	---	---	---
Password	PASS	---	---	---	---

Parameters (PAr folder)

The instructions on how to edit a machine parameter are given below. For example, considering the CL configuration parameter folder, parameter **CL00** (folder PAr/CL/CL00).

Editing a parameter

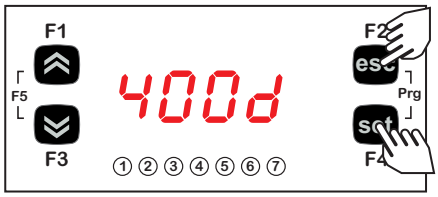

To view the parameter menu, press the **esc** and **set** keys at the same time. This will open the Par menu.

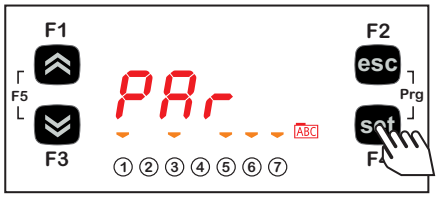

The PAr parameters menu contains all controller parameters. Press the **set** key to view the folders.

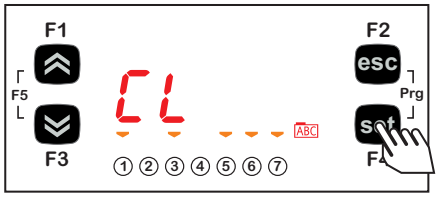

The first folder displayed by the controller will be the CL folder. Press the **set** key again to modify individual CL parameters.

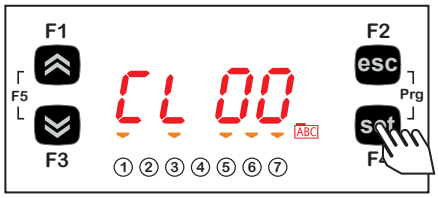

The controller will show parameter **CL00** (factory default settings).

To scroll through the various parameters press **UP** to go to the next parameter or **DOWN** to return to the previous one.

To view the value of the parameter press the **set** key.

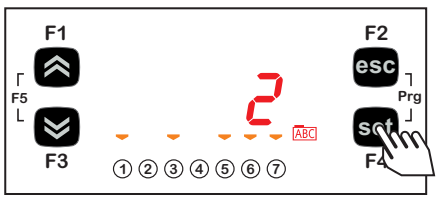

For parameter **CL00**, the value shown will be 2. Use the **UP** and **DOWN** keys to change the value.

On selecting a value, press the **set** key. **

To exit this display and return to the previous level, press the **esc** key.

N.B.: pressing the **set key confirms the modified value; pressing the **esc** key returns you to the previous level without saving the new value entered.

5.5.3. Functions (FnC folder)

UNICARD / MFK

The key must be connected to the TTL serial port (See **CHAPTER 12 page 81**) and allows the rapid programming of instrument parameters.

Access the BIOS programming menu, scroll through the folders using **UP** or **DOWN** to view the FnC folder.

Select it using the **set** key, scroll through the folder using **UP** or **DOWN** to view the various parameters available (**UL**, **dL**, **Fr**) and use **set** to select the desired parameter:

- Upload (**UL**): select **UL** and press **set**. This function uploads the programming parameters from the instrument. If the operation is successful, the display will show "**yES**", otherwise it will show "**Err**".
- Format (**Fr**): This command is used to format the key.
  NOTE: use of the **Fr** parameter will delete all current data. This operation cannot be reversed.
- Download (**dL**): Connect the key when the instrument is switched off. At startup, data will automatically start downloading from the key to the instrument.
  At the end of the lamp test, the display will show "**yES**" if the operation was successful and "**Err**" if it failed or was not completed.

NOTE: After the download, the instrument will use the newly uploaded map settings.

The parameters map and firmware can be downloaded when switching on the instrument (download parameters from reset), using the same procedure described in **CHAPTER 12.3 page 82.**

Setting a password (Par/PASS folder)

Access the PASS folder (from the main display pressing both **esc** and **set,** and search the folder using **UP** and **DOWN**). Set the PASS value to view the parameters visible for that password.

Setting the password

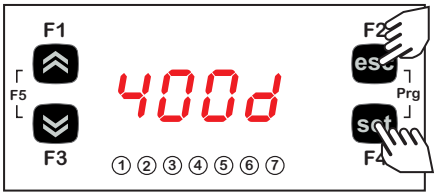

To view the PASS folder in the main display, press **esc** and **set** at the same time.

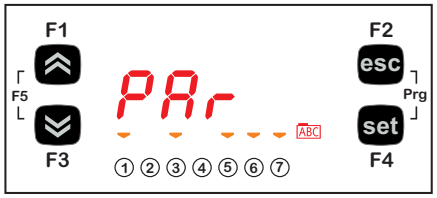

Pressing both keys will open the menu containing the list of folders. Use **UP** and **DOWN** to scroll through the list to the PASS folder.

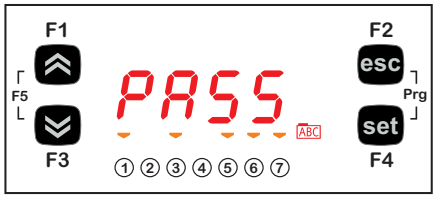

Press **set** to enter the PASS folder.
From here, set the password (installer or manufacturer), press **set** and exit.

Now open and view parameters to change a value (see **5.5.2. Bios programming menu page 42**).

5.6. A/CRII application menu

5.6.1. A/CRII status menu

The resource values can be viewed in the “Status” menu.

Label							Description
SEt	SP1	SP2	SP01	SP02	/	/	Viewing the operating setpoints
Ai *(1)*	tSC	PSC	tCd	PCd	tES	tLr	Viewing the probes connected to the device
	tdS	Sb	tSC	SHt	/	/	
SCr	StCr	hS1	dS1	hS2	dS2	hS3	Viewing the CRII compressor operating time
	dS3	/	/	/	/	/	
SC1	StC1	hC1	dC1	/	/	/	Viewing compressor 1 operating time
SC2	StC2	hC2	dC2	/	/	/	Viewing compressor 2 operating time
SC3	StC3	hC3	dC3	/	/	/	Viewing compressor 3 operating time
SC4	StC4	hC4	dC4	/	/	/	Viewing compressor 4 operating time
SFi	StFi	Pid	/	/	/	/	Viewing fan inverter operating status
SF1	StF1	hF1	dF1	/	/	/	Viewing fan 1 operating time
SF2	StF2	hF2	dF2	/	/	/	Viewing fan 2 operating time
rEL	idF	rEL	tAb	CrCH	CrCL	/	Viewing the device release
HiSt	HYSP	HYSC	HYSd	HYSt	HiSF	/	Viewing alarm log
AL	Er01 ... Er19		/	/	/	/	Viewing active alarm display

(1)
tSC = Suction pressure converted to temperature (this is not a real temperature probe, it is the conversion of Suction Pressure)
PSC = Suction pressure
tCd = Condensing pressure converted to temperature (it is not a true temperature probe it is the conversion of the Condensing Pressure)
PCd = Condensing pressure
tES = External temperature
tLr = Liquid return temperature
tdS = Discharge temperature
Sb = Condenser outlet subcooling (It is a calculation made with the condensing pressure converted into temperature and the liquid return temperature)
tSC = Suction temperature
SHt = Suction superheat (It is a calculation made with the Suction pressure converted into temperature and the Suction temperature)

Viewing the Status menu

Viewing the “Status” menu	
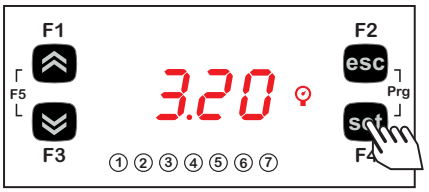	To view the “status” menu, from the main screen press **set**.
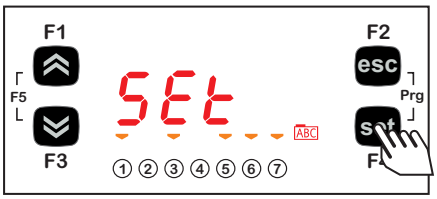	Press **set** once to access a list of the various folders. Label Set appears on the display. (Use **UP** and **DOWN** to scroll through the other labels to find the one required).
	Press the **set** key to view the label for the required folder (AL in this case).
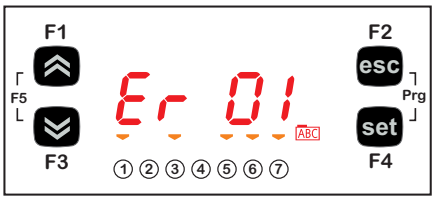	Press the **set** key again to view the value of **Er01**. Press the **esc** key to return to the main display.

Viewing the Programming menu

Editing a parameter



To access the parameters menu, press **esc** and **set** together to enter the PAr menu.

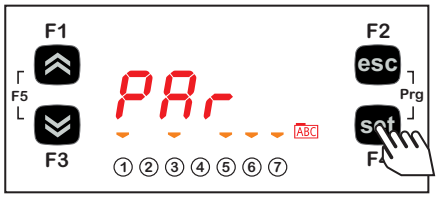

The PAr parameters menu contains all controller parameters. Press the **set** key to view the folders.

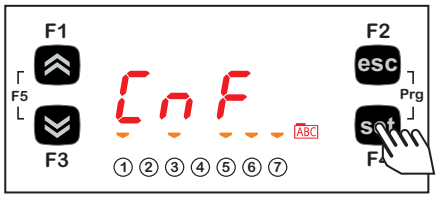

The first folder the controller shows is the CnF configuration folder. Press the **set** key again to modify individual CL parameters.

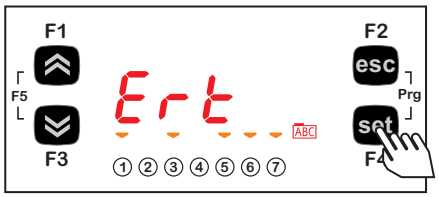

The instrument will show the parameter Ert.

To scroll through the various parameters press **UP** to go to the next parameter or **DOWN** to return to the previous one.

To view the value of the parameter press the **set** key.

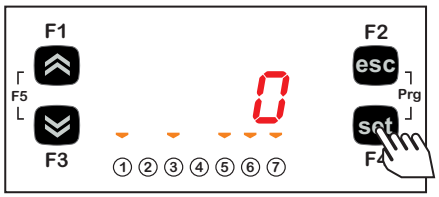

For parameter Ert, the factory set value shown will be 0. Use the **UP** and **DOWN** keys to change the value.

On selecting a value, press the **set** key. **

To exit this display and return to the previous level, press the **esc** key.

****Note**: pressing the **set** key confirms the modified value; pressing **esc** returns to the previous level without modifying the set value.

CHAPTER 6
Physical I/O configuration (PAR/CL folder)

The application of incorrect current and voltage values to the controller inputs and outputs may damage the electronic circuit. Moreover, connecting a current output device to an analog input configured for voltage and vice-versa will also damage the electronic circuit.

NOTICE

INOPERABLE DEVICE

- Do not apply voltages above 11 Vdc to the analog inputs on the controller or the inputs/outputs expansion module when the analog input is configured as a 0...10 V input.
- Do not apply currents over 30 mA to the controller analog inputs or the input/output expansion module when the analog input is configured as an input 0...20 mA or 4...20 mA.
- Make sure that the signal applied corresponds to the analog input configuration.

Failure to follow these instructions can result in equipment damage.

6.1. Analog inputs

There are a total of 5 analog inputs referred to below as AiL1…AiL5.
Using the parameters, a physical resource (probe, digital input, voltage/current signal) can be “physically” configured for each type of input:

- 3 inputs (AiL1, AiL2 and AiL5) can be configured as temperature probes (NTC type probe) or as digital inputs.
- 2 inputs (AiL3 and AiL4) can be configured as temperature probes, an NTC type probe, as digital inputs or current/voltage input (signal 0...20 mA / 4...20 mA / 0...10 V, 0...5 V, 0...1 V).

Par.	Description	0	1	2	3	4	5	6	7	8
CL00	Analog input AiL1 type	Probe not configured	Probe configured as voltage-free digital input	NTC sensor	/	/	/	/	/	/
CL01	Analog input AiL2 type	Probe not configured	Probe configured as voltage-free digital input	NTC sensor	/	/	/	/	/	/
CL02	Analog input AiL3 type	Probe not configured	Probe configured as voltage-free digital input	NTC sensor	4...20 mA	0...10 V	0...5 V	0...1 V	0...20 mA	/
CL03	Analog input AiL4 type	Probe not configured	Probe configured as voltage-free digital input	NTC sensor	4...20 mA	0...10 V	0...5 V	0...1 V	0...20 mA	/
CL04	Analog input AiL5 type	Probe not configured	Probe configured as voltage-free digital input	NTC sensor	/	/	/	/	/	/

Parameter	AI analog input	Range	Description
CL10	AiL3	CL11…999.9	Analog input AiL3 fullscale value
CL11	AiL3	-999.9…CL10	Analog input AiL3 start of scale value
CL12	AiL4	CL13…999.9	Analog input AiL4 fullscale value
CL13	AiL4	-999.9…CL12	Analog input AiL4 start of scale value
For the analog input used as a suction pressure sensor, multiply the start and end values of the scale by 10 (high resolution)			

Parameter	Description	Unit of measure	Range
CL20	Analog input AiL1 differential	°C	-12.0..12.0
CL21	Analog input AiL2 differential	°C	-12.0..12.0
CL22	Analog input AiL3 differential	°C / bar	-12.0..12.0
CL23	Analog input AiL4 differential	°C / bar	-12.0..12.0
CL24	Analog input AiL5 differential	°C	-12.0..12.0
For the analog input used as a suction pressure sensor, multiply the offset (calibration) value by 10 (high resolution)			

6.2. Digital inputs

There are 6 voltage-free digital inputs, identified below as DI1…DI6.
The digital inputs cannot be configured.

6.3. Digital outputs

- Hazardous voltage outputs, relay.
- Low voltage (SELV) outputs, open collector.

The digital outputs are identified as DO1 ... DO5.
The digital inputs cannot be configured.

6.4. Analog outputs

See **CHAPTER 3 Electrical connections page 18** for the number and type of analog outputs used and for information on the symbols used on labels supplied with the controller.
There are 6 analog outputs: hazardous voltage output(s) and low voltage (SELV) output(s)

Table A – Analog outputs

			(SELV)		
Output	**Label on display**	**Hazardous voltage**	**Open Collector PWM/PPM**	**0...10 V**	**0..20 mA 4..20 mA**
TC1	**TCL1**	**2 A 240 Vac**	/	/	/
TC2	**AOL2**	**2 A 240 Vac**	/	/	/
AO1	**AOL1**	/	●	/	/
AO3	**AOL3**	/	/	●	/
AO4	**AOL4**	/	/	●	/
AO5	**AOL5**	/	/	/	●

TRIAC analog outputs (TC1, TC2)

A high voltage TRIAC output is used to control the coils on the CRII compressor.

The TRIAC TC1, TC2 output, when partialized, suppresses the half-wave at the zero-crossing.

The AO1 output is configured to control the third valve on the CRII compressor (**ns** = 3).

⚠ WARNING

UNINTENDED EQUIPMENT OPERATION

Do not install contactors or other interposition relays downstream from the Triac outputs.

Failure to follow these instructions can result in death, serious injury, or equipment damage.

Configuration of low voltage (SELV) analog outputs

To configure, see the table below.

Analog output SELV AO3-4-5		
Parameter	**Description**	**Values**
CL60	AOL5 type analogue output	**0**= 0...20 mA Current analog output **1**= 4...20 mA Current analog output **2**= RESERVED

The following can be piloted:

- Loads with output modulation or
- Loads with on/off type switching using
  - o the output as 0...10 V switch (AO3-4).
  - o the output as a switch 4…20 mA/0…20 mA.

CHAPTER 7
Device configuration (PAR/CnF...LEd folder)

The **EWCM 436D PRO** / A-CRII controllers are programmed to manage CRII compressor racks with two or three solenoid valves.
The CRII compressor is controlled via outputs TRIAC TC1, TC2.

To manage a third valve, set the parameter **nS**=3 and connect an external relay to the isolated solid state (SSR), to the analog output AO1.

NOTICE

INOPERABLE DEVICE

Control the third CRII valve exclusively via an isolated SSR relay conforming to the regulations in force, connected to the analog output AO1.

Failure to follow these instructions can result in equipment damage.

NOTICE

INOPERABLE DEVICE

Power the device only with alternating current.

Failure to follow these instructions can result in equipment damage.

In addition to controlling the CRII compressor, the **EWCM 436D PRO / A-CRII** control is able to control up to 4 On / Off compressors and 2 analog fans or inverter fan.

7.1. Device configuration parameters

In the folder **CnF** it is possible to configure:

- Select refrigerant type;
- Select number of compressors managed in addition to the CRII compressor;
- Select number of compressors on if there is a suction probe error;
- Select number of solenoid valves on the CRII compressor;
- Select number of digital and analog fans;
- Enable temperature probes.

7.1.1. Type of refrigerant

Using parameter **Ert** it is possible to configure the type of refrigerant used in the system.

Parameter	Description	Values	
Ert	Select type of refrigerant	**0** = R404A; **1** = R22; **2** = R744; **3** = RESERVED; **4** = R134a; **5** = R407C; **6** = R410A; **7** = R427A; **8** = R507A;	**9** = R407A; **10** = R717; **11** = R407F; **12** = R450A; **13** = R448A (liquid); **14** = R448A (gas); **15** = R513A; **16** = R449A

7.1.2. Number of compressors - ON/OFF

Using parameter **CPn** it is possible to select the number of compressors managed by the **EWCM 436D PRO** / A-CRII controller in addition to the CRII compressor.

Parameter	Description	Values
CPn	Number of compressors in steps	**0** = No compressor; **1** = 1 Compressor; **2** = 2 Compressors; **3** = 3 Compressors; **4** = 4 Compressors.

Number of compressors on with probe failure

It is possible to configure the number of compressors that remain forced on if there is a suction probe error using parameter **CPE**.

Parameter	Description	Values
CPE	Default regulator power value when suction probe error occurs	**0**= No compressor on; **1** = 1 Compressor on; **2** = 2 Compressors on; **3** = 3 Compressors on; **4** = 4 Compressors on.

7.1.3. Number of CRII compressor solenoid valves

It is possible to configure the number of CRII compressor valves, via the parameter **nS**.

Parameter	Description	Values
nS	Number of CRII compressor coils	**2** = 2 CRII coils (valves); **3** = 3 CRII coils (valves).

7.1.4. Managing the digital and analog fans

The **EWCM 436D PRO / A-CRII** controller can manage up to 2 digital outputs to manage the digital fans and up to one analog output to control the EC fans via the inverter.

Parameter	Description	Values
nFn	Number of digital fans	**0** = No digital output configured for fan control; **1** = 1 digital output configured for fan control; **2** = 2 digital outputs configured for fan control.
nFA	Number of analog fans	**0** = No analog output configured for Inverter control; **1** = 1 digital output configured for Inverter control.

7.1.5. Temperature probe enabling

The **EWCM 436D PRO / A-CRII** controller can manage up to 4 analog inputs for managing machine alarms and floating condensation. They are enabled by the parameters:

Parameter	Description	Values
FtE	Enable discharge temperature probe to block the CRII compressor in the event of an alarm.	**0**= disabled; **1** = enabled.
CtE	Enable suction temperature probe to manage High and Low superheating alarm on suction.	
EeT	Enable external temperature probe for floating condensation.	
ELr	Enable liquid return temperature probe to calculate superheating or for floating condensation.	

7.2. I/O configuration parameters

7.2.1. Configuration of analog inputs

The **EWCM 436D PRO / A-CRII** controller can manage 5 analog inputs of which:

- 3 analog inputs configurable as temperature inputs, from parameters:

Parameter	Description	Value
01P	AI1	**0** = Disabled **1** = External temperature **2** = Liquid return temperature **3** = Discharge temperature **4** = Suction temperature
02P	AI2	
05P	AI5	

- 2 analog inputs configurable as pressure inputs, via parameters:

03P	AI3	**0** = Disabled **1** = Suction pressure **2** = Discharge pressure
04P	AI4	

7.2.2. Configuration of analog outputs

The **EWCM 436D PRO / A-CRII** controller can manage 6 analog outputs, of which:

- 2 TRIAC TC1 and TC2 outputs, non-configurable. They manage only valves 1 and 2 on the CRII compressor;
- 1 analog output AO1, non-configurable. If the parameter **nS** = 3 the analog output will manage an external solid state relay (SSR) which will control the third valve on the CRII compressor.
- 2 analog outputs AO3, AO4 type 0...10 V, configurable via parameters:

Parameter	Description	Value
03n	AO3	**0** = Disabled; **±1** = CRII compressor drive; **±2** = Alarm output; **±3** = Compressor 1 drive; **±4** = Compressor 2 drive; **±5** = Compressor 3 drive; **±6** = Compressor 4 drive; **±7** = Digital Fan 1; **±8** = Digital Fan 2; **±9** = Enable Inverter Fan; **10** = Inverter Fan (analog) - The "**+**" sign indicates that the output is active when the contact is closed. - The "**-**" sign indicates that the output is active when the contact is open. **NOTE:** For values ±1 ... ±9, the outputs will act as On/Off
04n	AO4	

- 1 analog output AO5, 4...20 mA / 0...20 mA, configurable via parameter:

Parameter	Description	Value
05n	AO5	**0** = Disabled; **1** = Inverter.

7.2.3. Configuration of digital inputs

The **EWCM 436D PRO / A-CRII** controller has 6 digital inputs, configurable via parameters:

Parameter	Description	Value
di1	i01	**0** = Disabled; **±1** = CRII compressor thermal switch; **±2** = Compressor 1 thermal switch; **±3** = Compressor 2 thermal switch; **±4** = Compressor 3 thermal switch; **±5** = Compressor 4 thermal switch; **±6** = Fan thermal switch; **±7** = Maximum pressure switch; **±8** = Minimum pressure switch; **±9** = Remote on-off; **±10** = Enable reduced discharge set; **±11** = Enable reduced suction set. - The "**+**" sign indicates the input is active when the contact is open. - The "**-**" sign indicates that the input is active when the contact is closed.
di2	i02	
di3	i03	
di4	i04	
di5	i05	
di6	i06	

7.2.4. Digital output configuration

The **EWCM 436D PRO / A-CRII** controller has 5 digital outputs configurable via parameters:

Parameter	Description	Value
d01	dO1	**0** = Disabled; **±1** = CRII compressor drive; **±2** = Alarm output; **±3** = Compressor 1 drive; **±4** = Compressor 2 drive; **±5** = Compressor 3 drive; **±6** = Compressor 4 drive; **±7** = Digital Fan 1; **±8** = Digital Fan 2; **±9** = Enable Inverter Fan. - The "**+**" sign indicates that the output is active when the contact is closed. - The "**-**" sign indicates that the output is active when the contact is open.
d02	dO2	
d03	dO3	
d04	dO4	
d05	dO5	

7.2.5. LED configuration

The LEDs on the display can be configured via the parameters, in the LED folder.

Parameter	Description	Icon	Value
O1u	Configuration of LED 1	①	**0** = Disabled; **1** = CRII compressor drive; **2** = Alarm output; **3** = CRII compressor capacity 1; **4** = CRII compressor capacity 2; **5** = CRII compressor capacity 3; **6** = Compressor 1; **7** = Compressor 2; **8** = Compressor 3; **9** = Compressor 4; **10** = Digital Fan 1; **11** = Digital Fan 2; **12** = Analog Fan 1.
O2u	LED 2 configuration	②	
O3u	LED 3 configuration	③	
O4u	LED 4 configuration	④	
O5u	LED 5 configuration	⑤	
O6u	LED 6 configuration	⑥	
O7u	LED 7 configuration	⑦	

CHAPTER 8
Compressors

The **EWCM 436D PRO** / A-CRII controller adjusts its capacity depending on the suction pressure.

8.1. Type of compressors supported

The **EWCM 436D PRO / A-CRII** controller can manage:

- 1 CRII compressor with up to 3 solenoid valves;
- 1 to 4 compressors with no capacity adjustment (On/Off).

8.2. System configurations supported

The following types of suction systems can be used:

No.	Description	CPn par. value	nS par. value
1	One CRII compressor with 2 valves	0	2
2	One CRII compressor with 2 valves and one single compressor	1	2
3	One CRII compressor with 2 valves and 2 single compressors	2	2
4	One CRII compressor with 2 valves and 3 single compressors	3	2
5	One CRII compressor with 2 valves and 4 single compressors	4	2
6	One CRII compressor with 3 valves	0	3
7	One CRII compressor with 3 valves and one single compressor	1	3
8	One CRII compressor with 3 valves and 2 single compressors	2	3
9	One CRII compressor with 3 valves and 3 single compressors	3	3
10	One CRII compressor with 3 valves and 4 single compressors	4	3

8.3. Overview of compressor control

The purpose of the compressor unit is to maintain the suction pressure within a band around a given setpoint.
In the compressor on-off chain, the CRII is always the first to come on and the last to go off.
The CRII compressor capacity is modulated via the solenoid valves which are installed to charge and discharge the compressor.
A CRII compressor modulates its capacity according to request, from 10% to 100% power.
The modulation follows the up and down pressure trends. If the pressure rises, the solenoid valve on the CRII compressor is enabled and begins to modulate. If the pressure rises further, the solenoid valve will remain active and a new valve will begin to modulate to increase the supplied power. When the power increases further, the digital compressors are also switched on.
The **EWCM 436D PRO** / A-CRII controller activates the CRII compressor valves according to their running time. When the compressor comes on, the controller starts to modulate the TRIAC TC1 or TC2 output with a shorter running time. In the same way, also for the single compressors, the choice of compressor to be switched on, among those which are off, is always based on the one with the shortest running time
These are stored in the non-volatile memory and can be viewed in the application status menu, in the folders:

Folder	Description
SCr	Display CRII compressor running time
SC1	Display compressor 1 running time
SC2	Display compressor 2 running time
SC3	Display compressor 3 running time
SC4	Display compressor 4 running time

It is possible to reset the running time in the PRG programming menu, in the rSt folder.

8.3.1. CRII compressor on mode

When the CRII compressor is off and the safety times defined for parameters **OFc** and **OnC** have expired the compressor comes on if the suction pressure is above the internal upper band for ≥ **dH**. When switched on, the first solenoid valve also comes on. When the pressure conditions for switching on are met but the on time elapsed is less than **dH**, LED 1 on the display flashes. When the compressor comes on, LED 1 comes on without flashing and at the same time LEDs 2 or 3 or 4 come on, depending on the valve controlled. If the pressure falls to within the band before time **dH expires,** LED 1 stops flashing and the compressor does not come on.

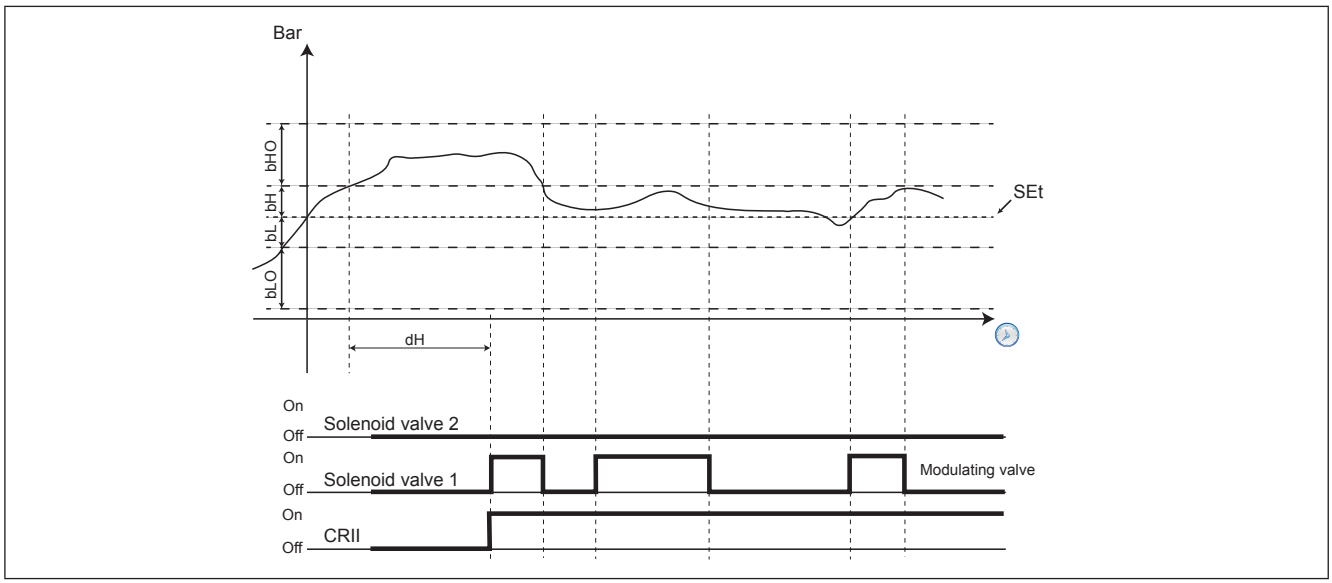

Fig. 30. CRII compressor on

	PAR.	DESCRIPTION
CPr	SP1	**pressure setpoint, suction section**
CPr	bHO	**Upper band 1 neutral zone**
CPr	bH	**Upper band 2 neutral zone**
CPr	bL	**Lower band 1 neutral zone**
CPr	bLO	**Lower band 2 neutral zone**
CPr	dH	**Time over upper band 1 for compressor capacity increase**
CPr	dHO	**Time over upper band 2 for compressor capacity increase**
CPr	dL	**Time under lower band 1 for compressor capacity decrease**
CPr	dLO	**Time under lower band 2 for compressor capacity decrease**
CPr	OS1	**Offset on setpoint**
Cr2	tOf	**Maximum CRII compressor inactivity time before switch-off**
Cr2	CrE	**Number of CRII coils active in case of suction probe error**
Cr2	tAC	**Time over upper band 1 for further CRII coil activation**
Cr2	tdC	**Time under lower band 1 for CRII coil disabling**
Cr2	oFC	**CRII compressor protection time OFF - ON**
Cr2	OnC	**CRII compressor protection time ON - ON**
Cr2	OnS	**Minimum time CRII solenoid ON**
Cr2	OFS	**Minimum time CRII solenoid OFF**

8.3.2. Modulation of CRII valves and safety times

The compressor must be on for the valves to modulate. When switching on, the **EWCM 436D PRO / A-CRII** controller activates the valve with the shortest running time, which becomes the modulating valve.

The parameters determining the minimum on and off times are **OnS** and **OFS** respectively.

Every time one of the valves is activated or deactivated, the time for which the valve remains active or inactive is metered. If a valve is active and remains so for longer than **OnS** or, once disabled, it stays off for longer than **OFS**, no protection will affect the subsequent control.

The solenoid valves cannot:

1. Be activated or deactivated for a shorter time than the period defined by parameters **OnS** and **OFS**;
2. Be activated and deactivated within a cycle representing the sum of the parameters **OnS** and **OFS**.

The controller automatically determines which of the 2 rules to apply, based on the operating time of the solenoid valves.

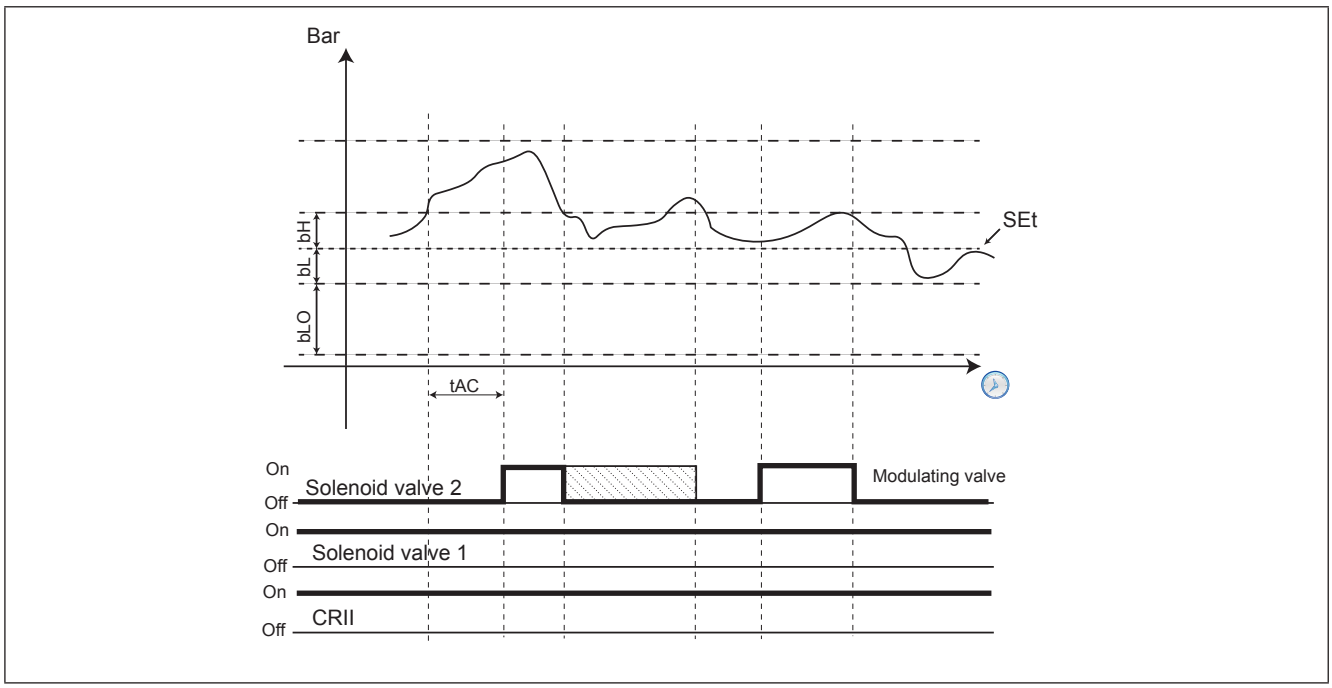

Fig. 31. Protection time

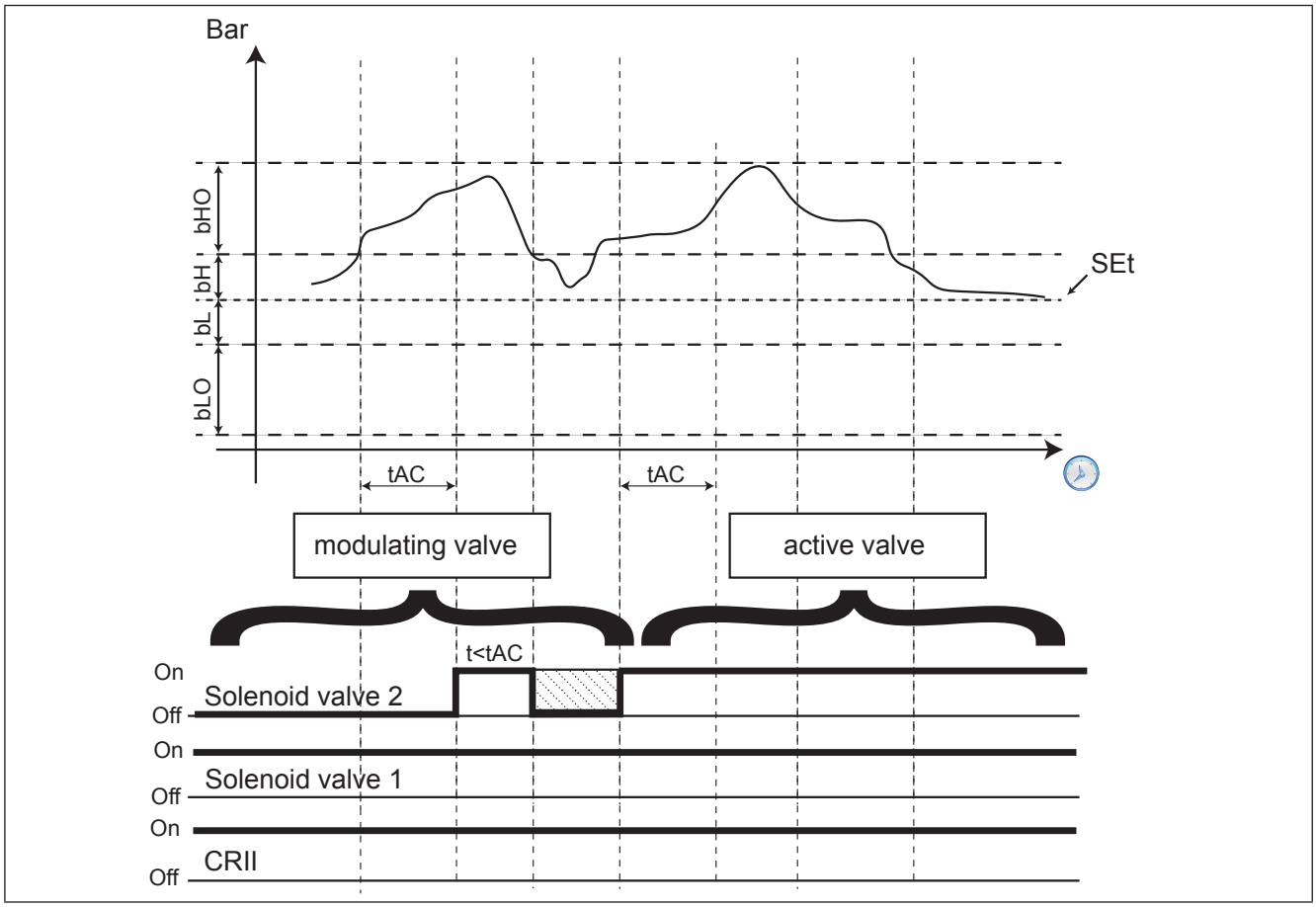

Fig. 32. TC2 from modulating to active

The modulating valve is switched when the pressure is between the setpoint and the upper limit of the internal band. The modulation follows the up and down pressure trends. If the pressure rises the modulating valve is activated, when it drops it is disabled. If the pressure rises too far and exceeds the upper limit of the internal band for longer than **tAC**, the power requested from the CRII is increased, consequently enabling another valve (if available). The last valve activated automatically becomes the new modulating valve, while the previous one will always remain active until the conditions for off or those for which it becomes the modulating valve again, are met. If the pressure returns to within the internal upper limit before the time **tAC**, no power increase is requested and the modulating valve is disabled, within the safety time. The time the pressure must remain out of range to activate a new valve is equal to **tAC/2** if the pressure exceeds the upper limit of the external range.
When the suction pressure is between the internal lower range and the setpoint, the status of the CRII compressor and its valves is unchanged.
When the pressure drops below the internal lower range for longer than **tdC**, the power of the CRii compressor is reduced, forcing a solenoid valve from always active to modulating. For every further tdC period which elapses with pressure below the internal lower range, the modulating valve will be disabled and another solenoid valve will begin modulating until no valves are active any longer. Only at this point will it be possible to start the CRII compressor switch-off procedure.

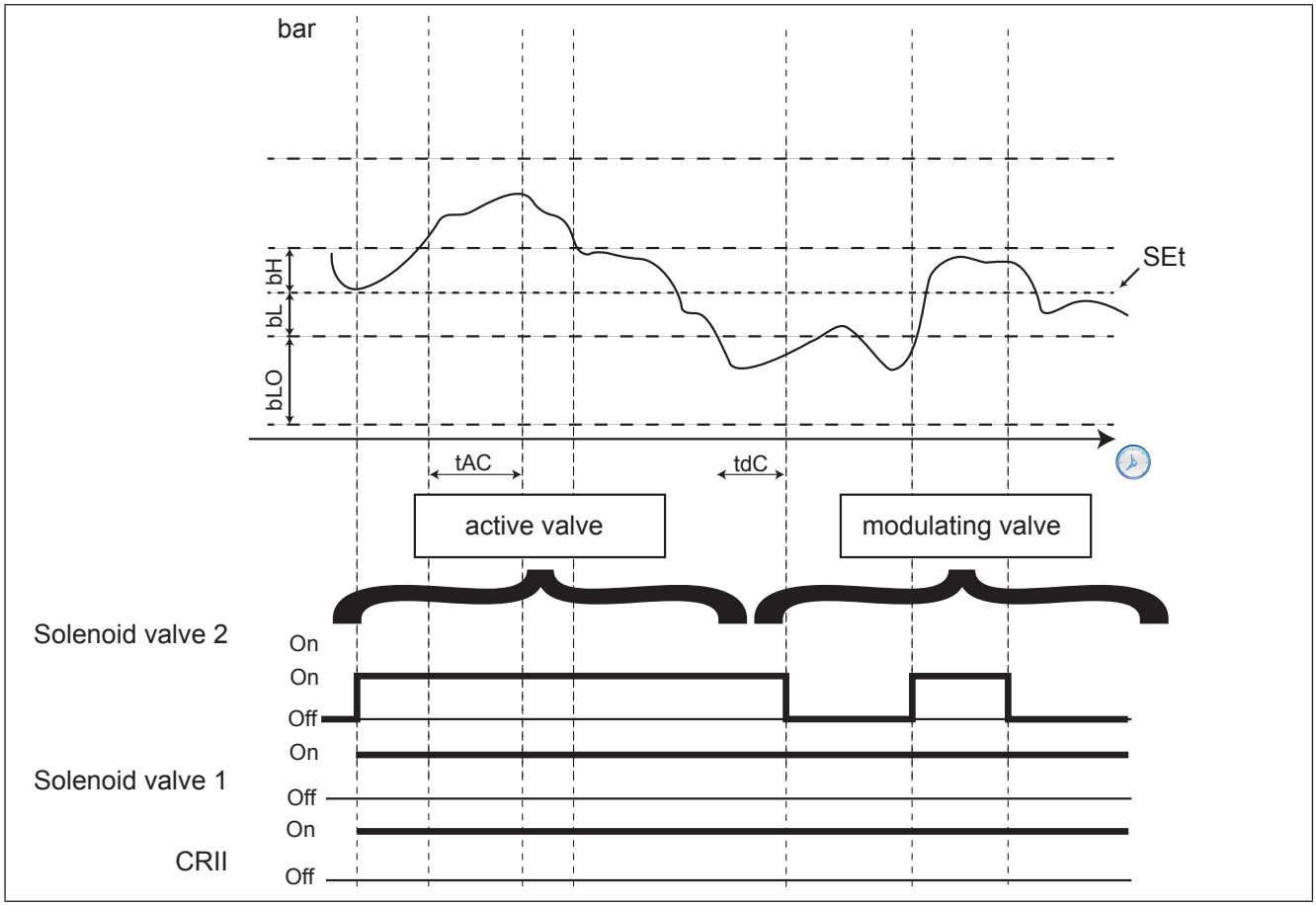

Fig. 33. Valve switch-off mode

8.3.3. Single compressor switch-on mode

If the last CRII valve available is activates as a modulating valve and despite its action the pressure remains above the internal upper range for more than **tAC** (**tAC/2** if higher than the external upper range), the modulating valve becomes fixed on, and if the suction pressure continues to remain out of range for longer than **dH** then, if one or more single compressors are working to support the CRII, a further increase in power is requested when switching on the first single compressor available with the shortest period of use. Every single other increase in power is required only if On/Off compressors are available and the pressure exceeds and remains out of range for longer than **dH**. If the pressure exceeds the most external range (**bH**+**bHO**) the time spent out of range required for the power increase request is equal to **dHO**. The concept of safety times also applies to single compressors and must be respected.

Parameter	Description
OF1	OFF to ON compressor safety time, suction section 1
OF2	OFF to ON compressor safety time, suction section 2
OF3	OFF to ON compressor safety time, suction section 3
OF4	OFF to ON compressor safety time, suction section 4
On1	ON to ON compressor safety time, suction section 1
On2	ON to ON compressor safety time, suction section 2
On3	ON to ON compressor safety time, suction section 3
On4	ON to ON compressor safety time, suction section 4

8.3.4. Switching off single compressors

The conditions for switching off single compressors are:

- CRII compressor with only one valve active as a modulating valve;
- Suction pressure lower than the internal range for **dL** (**dLO** for pressure lower than the external lower range).

If both conditions are respected, the compressor with the shortest running time is switched off.
Afterwards, one by one the other single compressors active will be switched off with a delay of **dLO** between one and the next.

8.3.5. Switching off the CRII compressor

The conditions governing the switching off of the CRII compressor are:

- Both CRII valves disabled;
- All single compressors disabled.

Both the conditions must be satisfied for at least **tOF** before the CRII compressor is switched off.

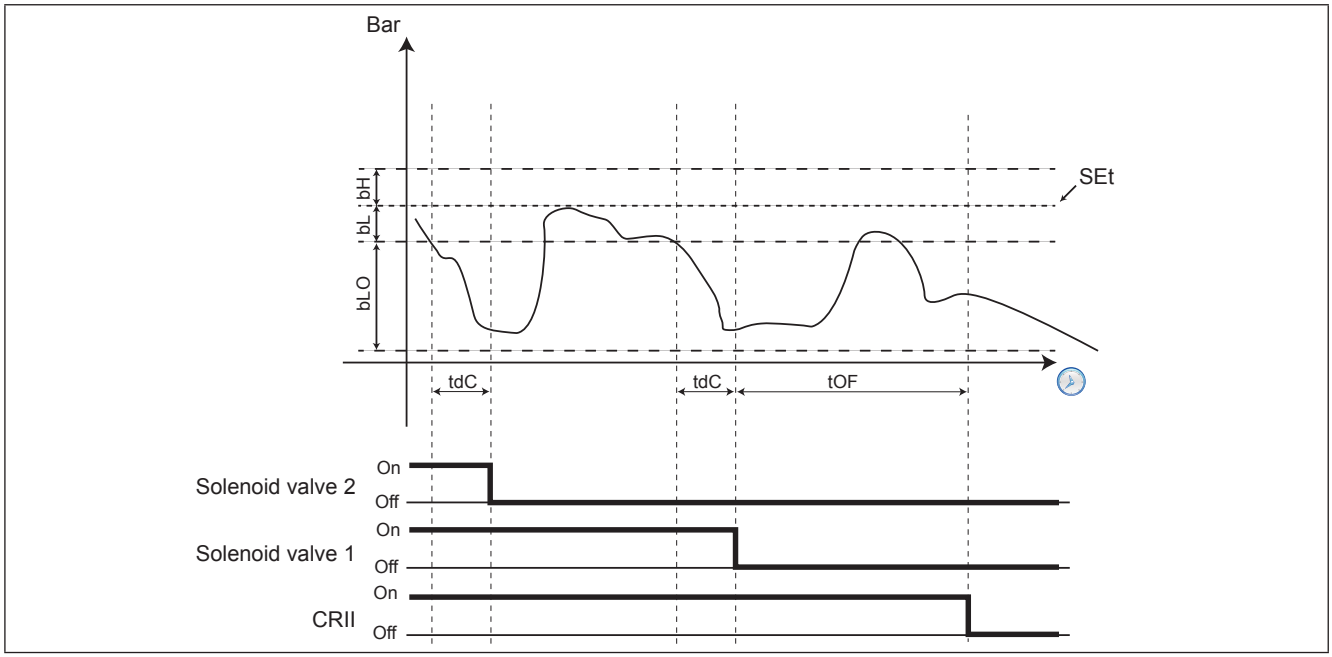

Fig. 34. Switching off the CRII compressor

CHAPTER 9
Fans (FAn)

The **EWCM 436D PRO / A-CRII** controller bases its condensation control on the pressure.

9.1. System configurations supported

The **EWCM 436D PRO / A-CRII** controller can independently manage:

- 2 digital fans;
- Analog output controlled by PID.

The parameters defining this type of control are:

Parameter	Description
nFn	Number of digital fans
nFA	Number of analog fans

NOTE. Only one of the 2 parameters nFn and nFA can be ≠ 0.

The system types are:

No.	Description	nFn par. value	nFA par. value
1	One digital output	1	0
2	Two digital outputs	2	0
3	One analog output	0	1
4	One analog output and one digital output	1	1
5	One analog output and two digital outputs	2	1

9.2. Digital fans

Control by a proportional range is positioned on the side compared to the control setpoint.
The range is divided according to the number of fans. If there are 2 fans the proportional range is divided into 2 and at each step a fan is switched on (see Fig. 35).
When the condensation pressure is below the SET, all fans are off; when it is above the SET+Proportional band all fans are on. The startup of every fan must observe the startup delay time **Fdn**.
The switch-off of every fan must observe the switch-off delay time **FdF**.

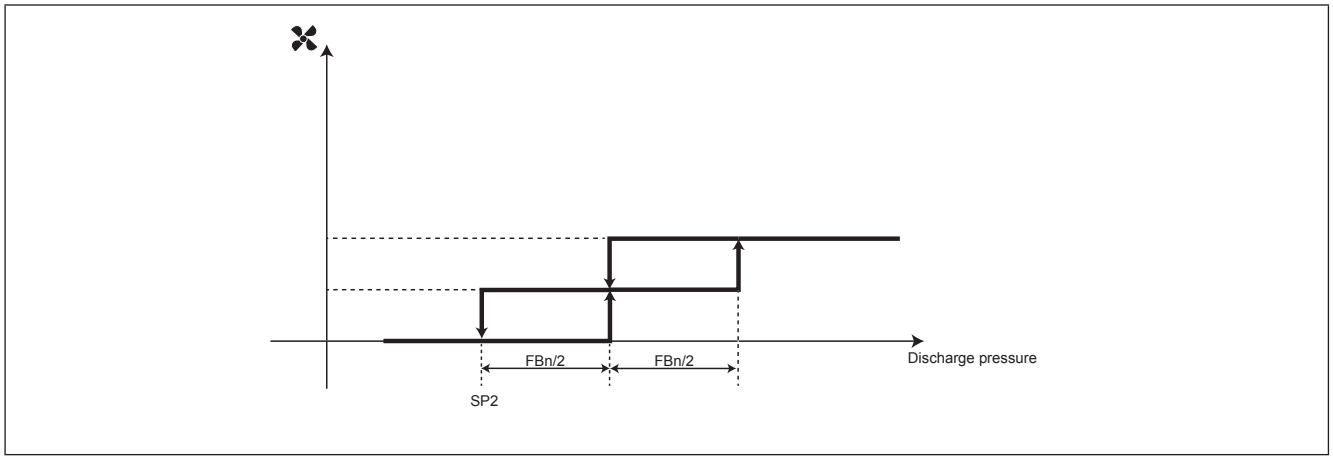

Fig. 35. Enabling the digital fans

9.3. Analog fan

The analog output managing the condensation is controlled by a PID controller, configured by default as only proportional, with a neutral area of 0.2 bar.
It is possible to configure a minimum value for the analog output via the parameter **FLP**. If **FLP** ≠ 0 and the output value from the PID is less than **FLP** but more than 0, then the PID is forced to have an output value of **FLP**.

9.4. Floating condensation

Functioning conditions

- Enabling the function via **EdC** = On.
- External temperature is less than the parameter **Het**.
- The condensation setpoint is calculated by adding the external temperature to the parameter **dtC**.

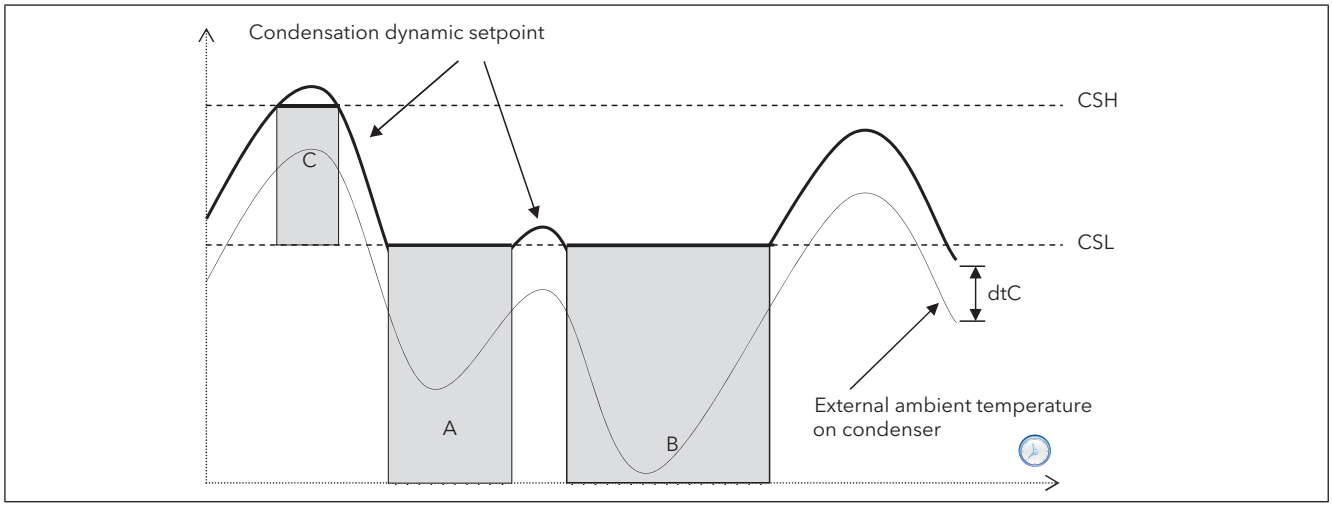

Fig. 36. Floating condensation

9.4.1. Sub-cooling

Sub-cooling is used to prevent liquid returns to the condenser and prevent the refrigerant sub-cooling.
It is enabled by the sub-cooling probe, parameter **ELr=**On.
Sub-cooling **UCtemp** (see Fig. 37) is calculated by using the sub-temperature probe value, positioned upstream of the liquid receiver, and that of the discharge probe:

UCtemp = value converted to temperature (discharge pressure) – sub-cooling probe value.
In accordance with the second diagram, a further correction is applied to the fluctuating setpoint (added to the actual setpoint).

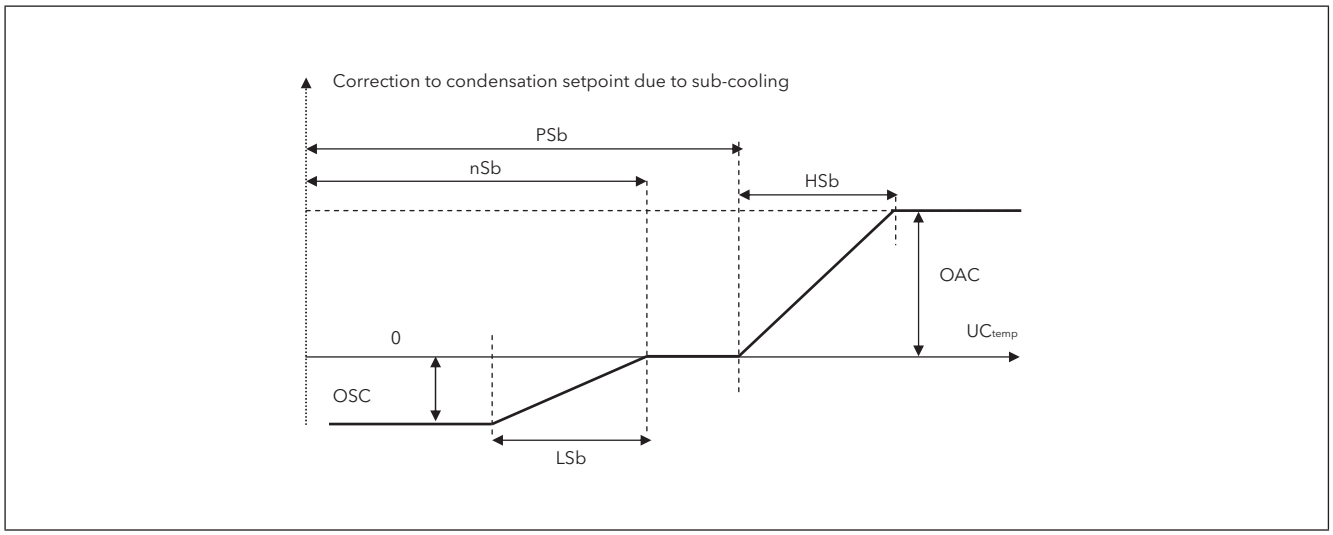

Fig. 37. Floating condensation - Sub-cooling

Note:

- **nSb** minimum sub-cooling value;
- **PSb** maximum sub-cooling value;
- If **nSb**<**UCtemp**<**PSb** no correction;
- For external values.
  - Proportional correction with deviations < **LSb** or **HSb**.
  - Fixed correction with deviations greater to or equal to **OSC** or **OAC.**

Having applied the sub-cooling, there will be the following limitations: The effective value of the floating setpoint will be limited below by **CSL** (areas A and B graph on previous page (See Fig. 36).

The effective value of the floating setpoint is limited above so that it cannot take on values higher than **CSH** (Area C graph on previous page).

CHAPTER 10
Parameters (PAR)

Parameter setting allows the integral configuration of the **EWCM 436D PRO** controllers.

Changes can be made via:

- **MFK** and **UNICARD**.
- Keys on front cover or **SKP 10** display.
- Personal computer, **Device Manager** software and **DMI**.

⚠ WARNING

UNINTENDED EQUIPMENT OPERATION

After editing the BIOS parameters the device must be switched off and on again.

Failure to follow these instructions can result in death, serious injury, or equipment damage.

10.1. Parameters / visibility table, folder visibility table and client table

The three **tables below** list all information required to read, write and decode all accessible resources in the device.

Parameters table	Contains all the configuration parameters for the device saved in the instrument's non-volatile memory, including visibility	See **10.1.1. BIOS / visibility parameters table page 65** **10.1.3. Application parameters table page 69**
Folders table	Gives the list of visibility for all parameter folders	See **10.1.2. Folder visibility table page 68**.
Client Table	Includes all I/O and alarm status resources available in the volatile memory of the instrument	See **10.1.4. Client Table page 76**

Description of the columns:

FOLDER	Indicates the label of the folder containing the parameter in question.
LABEL	Indicates the label used to display the parameters in the menu of the controller.
PAR. ADDRESS	Indicates the address of the Modbus register containing the resource to be accessed.
CPL	When the field indicates "Y", the value read by the register needs to be converted because the value represents a number with a sign. In the other cases the value is always positive or null. To carry out conversion, proceed as follows: • If the value in the register is between 0 and 32,767, the result is the value itself (zero and positive values). • If the value in the register is between 32,768 and 65,535, the result is the value of the register – 65,536 (negative values).
EXP	If = -1 the value read by the register is divided by 10 (value/10) to convert it to the values indicated in the RANGE and DEFAULT columns using the unit of measure in the **UM column** Example: parameter CL10 = 50.0. Column EXP = -1: • The value read by the device /**Device Manager** software is 50.0 • The value read by the register is 500 --> 500/10 = 50.0

VIS PAR. ADDRESS	The same as above. In this case, the Modbus register address contains the visibility value of the parameter. By default all parameters have • data size WORD • Range 0…3 (see **Setting a password (Par/PASS folder) page 43**) • UM. num
VIS PAR. VALUE	Indicates the visibility value of the parameter / folder • **0 = Never visible.** Not visible from the instrument • **1 = Level 1 – see Ui27** • **2 = Level 2 – see Ui28** • **3 = Always visible.**
R/W	Indicates the possibility for read and write, read only or write only of the resource: • R: the resource is read-only • W: the resource is write-only • RW: the resource can be both read and written
RANGE	Describes the interval of values that can be assigned to the parameter. It can be correlated with other parameters in the instrument (indicated with the parameter label). **NOTE**: if the real value is outside the permitted limits for the parameter (for example, because other parameters defining the limits have been changed), the limit that has been exceeded and not the real value will be displayed.
DEFAULT	Indicates the factory-set value for the standard version of the instrument.
UM	Unit of measure for values converted according to the rules indicated in the CPL and EXP columns. The unit of measure shown must be considered an example only, as it may change depending on the application (e.g. parameters with a UM in °C/bar could also have UM %RH)

The data bit size is always in WORD = 16 bit.

Parameter visibility and value (BIOS parameters only)
According to the reference code, some configuration parameters many not be visible and/or many have no meaning as the associated resource is not present.

It is possible to configure four levels of visibility, assigning appropriate values to parameters and folders:

Value	Visibility level	Password required
3	**Visible** parameters or folders	No password required.
2	**Manufacturer level** It is possible to view these parameters or folders only by entering the password defined in parameter UI28. All parameters specified as visible (3), parameters visible at manufacturer level (2) and parameters visible at installer level (1) will be visible.	The password-protected objects are visible only if the correct password is entered (installer or manufacturer) using the password entry procedure
1	**Installation level** It is possible to view these parameters or folders only by entering the password defined in parameter UI27. All parameters specified as visible (3) and parameters visible at the installer level (1) will be visible.	
0	Parameter or folders **NOT visible**	

Unless otherwise indicated, the parameter is visible and can be modified, unless custom settings have been configured via serial port.
It is possible to check the visibility of parameters and folders. Consult the folders table.
When modifying the visibility of the folder, the new setting applies to all parameters in the folder.

The A-CRII application parameters are always visible.

10.1.1. BIOS / visibility parameters table

FOLDER	LABEL	PAR. ADDRESS	CPL	EXP	VIS PAR. ADDRESS	VIS PAR. VALUE	R/W	DESCRIPTION	RANGE	DEFAULT	UM
CL	CL00	**53303**			**53584**	3	RW	**Analog input AiL1 type** • **0**= Probe not configured; • **1**= DI; • **2**= NTC; • **3…8** = Reserved.	0 ... 8	2	num
CL	CL01	**53304**			**53585**	3	RW	**AiL2 analog input type** See **CL00**	0 ... 8	2	num
CL	CL02	**53305**			**53586**	3	RW	**Analog input AiL3 type** • **0**= Probe not configured; • **1**= DI; • **2**= NTC; • **3**= 4...20 mA; • **4**= 0...10 V; • **5**= 0...5 V; • **6**= 0...1 V; • **7**= 0..20 mA.	0 ... 7	3	num
CL	CL03	**53306**			**53587**	3	RW	**AiL4 analog input type** See **CL02**	0 ... 7	3	num
CL	CL04	**53307**			**53588**	3	RW	**AiL5 analog input type** See **CL00**	0 ... 8	2	num
CL	CL10	**15648**	Y	-1	**53589**	3	RW	**Analog input AiL3 fullscale value**	CL11 ... 9999	700	°C/bar
CL	CL11	**15654**	Y	-1	**53590**	3	RW	**Analog input AiL3 start of scale value**	-500 ... CL10	-50	°C/bar
CL	CL12	**15649**	Y	-1	**53591**	3	RW	**Analog input AiL4 fullscale value**	CL13 ... 9999	300	°C/bar
CL	CL13	**15655**	Y	-1	**53592**	3	RW	**Analog input AiL4 start of scale value**	-500 ... CL12	0	°C/bar
CL	CL20	**53333**	Y	-1	**53593**	3	RW	**Analog input AiL1 differential**	-120 ... 120	0	°C
CL	CL21	**53334**	Y	-1	**53594**	3	RW	**Analog input AiL2 differential**	-120 ... 120	0	°C
CL	CL22	**53335**	Y	-1	**53595**	3	RW	**Analog input AiL3 differential**	-120 ... 120	0	°C/bar
CL	CL23	**53336**	Y	-1	**53596**	3	RW	**Analog input AiL4 differential**	-120 ... 120	0	°C/bar
CL	CL24	**53337**	Y	-1	**53597**	3	RW	**Analog input AiL5 differential**	-120 ... 120	0	°C
Note: For the analog input, which is selected as the suction pressure sensor, the input values of the start and end of scale as well as the offset (calibration) must be multiplied by 10 (high resolution)											

FOLDER	LABEL	PAR. ADDRESS	CPL	EXP	VIS PAR. ADDRESS	VIS PAR. VALUE	R/W	DESCRIPTION	RANGE	DEFAULT	UM
CF	CF01	**53264**			**53638**	3	RW	**Select COM1 protocol** Selection of TTL/RS485 communication channel protocol: 0 = **Eliwell**; 1 = Modbus Note: • If **CF01**=0, parameters **CF20/CF21** should be configured. • If **CF01**=1, parameters **CF30/CF31/ CF32** should be configured. **COM1 = The TTL port and the RS485 port cannot be used at the same time**	0 ... 1	1	num
CF	CF20	**53271**			**53639**	3	RW	**Eliwell protocol controller address** **CF20**= address of the controller within the family (values valid from 0 to 14) **CF21** = device family (values valid from 0 to 14) The two values **CF20** and **CF21** represent the network address of the device and are indicated in the format “FF.DD” (where FF=**CF21** and DD=**CF20**).	0 ... 14	0	num
CF	CF21	**53272**			**53640**	3	RW	**Eliwell protocol controller family** See **CF21**	0 ... 14	0	num
CF	CF30	**53273**			**53641**	3	RW	**Modbus protocol controller address**	1 ... 255	1	num
CF	CF31	**53274**			**53642**	3	RW	**Modbus baudRate protocol** • **0**= not used; • **1**= not used; • **2**= not used; • **3**= 9600 baud; • **4**= 19200 baud; • **5**= 38400 baud (RS485: not supported); • **6**= 57600 baud (RS485: not supported); • **7**= 115200 baud (RS485: not supported).	0 ... 7	3	num
CF	CF32	**53275**			**53643**	3	RW	**Modbus parity protocol** • **1**= Even; • **2**= None; • **3**= Odd.	1 ... 3	1	num
CF	CF60	**15638**			**53645**	3	RW	**Customer code 1** Parameter for the exclusive use of customers/users. The client can assign these parameters values that, for example, identify the type and/or version of the system, its configuration, etc.	0 ... 999	0	num
CF	CF61	**15639**			**53646**	3	RW	**Customer code 2** See **CF60**	0 ... 999	0	num

FOLDER	LABEL	PAR. ADDRESS	CPL	EXP	VIS PAR. ADDRESS	VIS PAR. VALUE	R/W	DESCRIPTION	RANGE	DEFAULT	UM
UI	UI26	**15714**			**53647**	3	RW	**Key hold time to enable function**	0 ... 999	350	4 ms
UI	UI27	**15743**			**53648**	1	RW	**Installer password** When enabled (value other than 0), it represents the access password for parameters.	0 ... 255	1	num
UI	UI28	**15744**			**53649**	2	RW	**Manufacturer password** When enabled (value other than 0), it represents the access password for parameters.	0 ... 255	2	num

10.1.2. Folder visibility table

LABEL	ADDRESS	R/W	DESCRIPTION	RANGE	VIS. PAR. VALUE	UM
_VisCarStati_Ai	**53519**	RW	Ai folder visibility	0 ... 3	3	num
_VisCarStati_di	**53520**	RW	di folder visibility	0 ... 3	3	num
_VisCarStati_AO	**53521**	RW	AO folder visibility	0 ... 3	3	num
_VisCarStati_dO	**53522**	RW	dO folder visibility	0 ... 3	3	num
VisCarStati_CL	**53523**	RW	CL folder visibility	0 ... 3	3	num
_VisCarProgPar	**53524**	RW	PAr folder visibility	0 ... 3	3	num
_VisCarFnC	**53525**	RW	FnC folder visibility	0 ... 3	3	num
_VisCarProgPASS	**53526**	RW	PASS folder visibility	0 ... 3	3	num
_VisCarPrCL	**53577**	RW	Par\CL folder visibility	0 ... 3	3	num
_VisCarPrCF	**53580**	RW	Par\CF folder visibility	0 ... 3	3	num
_VisCarPrUi	**53581**	RW	Par\Ui folder visibility	0 ... 3	3	num
_VisCarCC	**53583**	RW	Fnc\CC folder visibility	0 ... 3	3	num
_VisCarCC\UL	**53650**	RW	Fnc\CC\UL folder visibility	0 ... 3	3	num
_VisCarCC\dL	**53651**	RW	Fnc\CC\dL folder visibility	0 ... 3	3	num
_VisCarCC\Fr	**53652**	RW	Fnc\CC\Fr folder visibility	0 ... 3	3	num

10.1.3. Application parameters table

FOLDER	LABEL	VIS PAR. ADDRESS	CPL	EXP	VIS PAR. VALUE	R/W	DESCRIPTION	RANGE	DEFAULT	UM
CnF	Ert	**16800**			3	RW	**Select type of refrigerant** • **0**=R404A; • **1**=R22; • **2**=R744; • **3**=RESERVED; • **4**=R134a; • **5**=R407C; • **6**=R410A; • **7**=R427A; • **8**=R507A; • **9**=R407A; • **10**=R717; • **11**=R407F; • **12**=R450; • **13**=R448A (gas); • **14**=R448A (liquid)**;** • **15**=R513A; • **16**=R449A.	0 ... 16	0	num
CnF	CPn	**16801**			3	RW	**Number of compressors in steps** • **0**= No compressor • **1**= 1 Compressor; • **2**= 2 Compressors; • **3**= 3 Compressors; • **4**= 4 Compressors.	0 ... 4	1	num
CnF	CPE	**16802**			3	RW	**Default regulator power value when suction probe error occurs, suction section** • **0**= No compressor • **1**= 1 Compressor; • **2**= 2 Compressors; • **3**= 3 Compressors; • **4**= 4 Compressors.	0 ... 4	1	num
CnF	nS	**16803**			3	RW	**Number of CRII compressor coils** • **2**= 2 CRII coils; • **3**= 3 CRII coils.	2/3	2	num

FOLDER	LABEL	VIS PAR. ADDRESS	CPL	EXP	VIS PAR. VALUE	R/W	DESCRIPTION	RANGE	DEFAULT	UM
CnF	nFn	**16804**			3	RW	**Number of digital fans** • **0**= No digital fan; • **1**= 1 digital fan; • **2**= 2 digital fans.	0 ... 2	1	num
CnF	nFA	**16805**			3	RW	**Number of analog fans** • **0**= No analog output; • **1**= 1 fan.	0/1	1	flag
CnF	FtE	**16806**			3	RW	**Enable discharge probe** • **0**= disabled; • **1**= enabled.	0/1	1	flag
CnF	CtE	**16807**			3	RW	**Enable suction probe** • **0**= disabled; • **1**= enabled.	0/1	0	flag
CnF	Eet	**16808**			3	RW	**Enable external temperature probe** • **0**= disabled; • **1**= enabled.	0/1	0	flag
CnF	Elr	**16809**			3	RW	**Enable sub-cooling probe** • **0**= disabled; • **1**= enabled.	0/1	0	flag
Ait	01P	**16383**			3	RW	**Configuration of analog input 1** • **0**= Disabled; • **1**= External Temperature; • **2**= Liquid Return Temperature; • **3**= Discharge Temperature; • **4**= Suction Temperature.	0 ... 4	0	num
Ait	02P	**16384**			3	RW	**Configuration of analog input 2.** **As per O1P.**	0 ... 4	0	num
Ait	05P	**16387**			3	RW	**Configuration of analog input 5.** **As per O1P.**	0 ... 4	3	num
AiP	03P	**16385**			3	RW	**Configuration of analog input 3** • **0**= Disabled; • **1**= Suction Pressure; • **2**= Discharge Pressure.	0 ... 2	1	num
AiP	04P	**16386**			3	RW	**Configuration of analog input 4.** **As per O3P.**	0 ... 2	2	num

FOLDER	LABEL	VIS PAR. ADDRESS	CPL	EXP	VIS PAR. VALUE	R/W	DESCRIPTION	RANGE	DEFAULT	UM
di	i01	**16388**	Y		3	RW	**Configurability of digital input 1.** • **0=** Disabled; • **±1=** CRII compressor thermal switch; • **±2=** Compressor 1 thermal switch; • **±3=** Compressor 2 thermal switch; • **±4=** Compressor 3 thermal switch; • **±5=** Compressor 4 thermal switch; • **±6=** Fan thermal switch; • **±7=** Maximum pressure switch; • **±8=** Minimum pressure switch; • **±9=** Remote ON - OFF; • **±10=** Enable reduced discharge set; • **±11=** Enable reduced suction set. - The "+" sign indicates that the input is active when the contact is closed. - The "-" sign indicates that the input is active when the contact is open.	-11 ... 11	-1	num
di	i02	**16389**	Y		3	RW	**Configurability of digital input 2.** **As per i01.**	-11 ... 11	-2	num
di	i03	**16390**	Y		3	RW	**Configurability of digital input 3.** **As per i01.**	-11 ... 11	-6	num
di	i04	**16391**	Y		3	RW	**Configurability of digital input 4.** **As per i01.**	-11 ... 11	-8	num
di	i05	**16392**	Y		3	RW	**Configurability of digital input 5.** **As per i01.**	-11 ... 11	-7	num
di	i06	**16393**	Y		3	RW	**Configurability of digital input 6.** **As per i01.**	-11 ... 11	0	num

FOLDER	LABEL	VIS PAR. ADDRESS	CPL	EXP	VIS PAR. VALUE	R/W	DESCRIPTION	RANGE	DEFAULT	UM
AO	03n	**16402**	Y		3	RW	**Configurability of analog output 3**. • **0**= Disabled; • **±1**= CRII compressor drive; • **±2**= Alarm Output; • **±3**= Compressor 1 drive; • **±4**= Compressor 2 drive; • **±5**= Compressor 3 drive; • **±6**= Compressor 4 drive; • **±7**= Digital Fan 1; • **±8**= Digital Fan 2; • **±9**= Enable Inverter Fan; • **10**= Inverter Fan (analog). - The “+” sign indicates that the output is active when the contact is closed. - The “-” sign indicates that the output is active when the contact is open.	- 9 ... 10	10	num
AO	04n	**16403**	Y		3	RW	**Configurability of analog output 4.** **As per 03n**.	- 9 ... 10	0	num
AO	05n	**16404**			3	RW	**Configurability of analog output 5.** **As per 03n.**	0/1	0	flag
dO	d01	**16394**	Y		3	RW	**Configurability of digital output 1**. • **0**= Disabled; • **±1**= CRII compressor drive; • **±2**= Alarm Output; • **±3**= Compressor 1 drive; • **±4**= Compressor 2 drive; • **±5**= Compressor 3 drive; • **±6**= Compressor 4 drive; • **±7**= Digital Fan 1; • **±8**= Digital Fan 2; • **±9**= Enable Inverter Fan; - The “+” sign indicates that the output is active when the contact is closed. - The “-” sign indicates that the output is active when the contact is open.	-9 ... 9	1	num
dO	d02	**16395**	Y		3	RW	**Configurability of digital output 2.** **As per d01.**	-9 ... 9	3	num
dO	d03	**16396**	Y		3	RW	**Configurability of digital output 3.** **As per d01.**	-9 ... 9	7	num
dO	d04	**16397**	Y		3	RW	**Configurability of digital output 4.** **As per d01.**	-9 ... 9	0	num

FOLDER	LABEL	VIS PAR. ADDRESS	CPL	EXP	VIS PAR. VALUE	R/W	DESCRIPTION	RANGE	DEFAULT	UM
dO	d05	**16398**	Y		3	RW	**Configurability of digital output 5. As per d01.**	-9 ... 9	0	num
LEd	01u	**16524**			3	RW	**Configuration of LED 1.** • **0=** Disabled; • **1=** CRII Compressor drive; • **2=** Alarm Output; • **3=** CRII capacity 1*; • **4=** CRII capacity 2*; • **5=** CRII capacity 3*; • **6=** Compressor 1; • **7=** Compressor 2; • **8=** Compressor 3; • **9=** Compressor 4; • **10=** Digital Fan 1; • **11=** Digital Fan 2; • **12=** Analog Fan 1.	0 ... 12	1	num
LEd	02u	**16525**			3	RW	**Configuration of LED 2. As per 01u.**	0 ... 12	3	num
LEd	03u	**16526**			3	RW	**Configuration of LED 3. As per 01u.**	0 ... 12	4	num
LEd	04u	**16527**			3	RW	**Configuration of LED 4. As per 01u.**	0 ... 12	6	num
LEd	05u	**16528**			3	RW	**Configuration of LED 5. As per 01u.**	0 ... 12	10	num
LEd	06u	**16529**			3	RW	**Configuration of LED 6. As per 01u.**	0 ... 12	11	num
LEd	07u	**16530**			3	RW	**Configuration of LED 7. As per 01u.**	0 ... 12	12	num
CPr	SP1	**16820**	Y	-2	3	RW	**pressure setpoint, suction section**	0 ... 1000	320	bar
CPr	bHO	**16822**	Y	-2	3	RW	**Upper band 1 neutral zone**	10 ... 500	15	bar
CPr	bH	**16821**	Y	-2	3	RW	**Upper band 2 neutral zone**	10 ... 500	25	bar
CPr	bL	**16823**	Y	-2	3	RW	**Lower band 1 neutral zone**	10 ... 500	15	bar
CPr	bLO	**16824**	Y	-2	3	RW	**Lower band 2 neutral zone**	10 ... 500	25	bar
CPr	dH	**16825**			3	RW	**Time over upper band 1 for compressor capacity increase**	0 ... 600	30	s
CPr	dHO	**16826**			3	RW	**Time over upper band 2 for compressor capacity increase**	0 ... 600	15	s
CPr	dL	**16827**			3	RW	**Time under lower band 1 for compressor capacity decrease**	0 ... 600	10	s
CPr	dLO	**16828**			3	RW	**Time under lower band 2 for compressor capacity decrease**	0 ... 600	5	s
CPr	OS1	**16829**	Y	-2	3	RW	**Offset on setpoint**	-1000 ... 1000	0	bar
CPP	OF1	**16830**			3	RW	**OFF to ON compressor safety time, suction section 1**	0 ... 9999	60	s
CPP	OF2	**16831**			3	RW	**OFF to ON compressor safety time, suction section 2**	0 ... 9999	60	s

FOLDER	LABEL	VIS PAR. ADDRESS	CPL	EXP	VIS PAR. VALUE	R/W	DESCRIPTION	RANGE	DEFAULT	UM
CPP	OF3	**16832**			3	RW	**OFF to ON compressor safety time, suction section 3**	0 ... 9999	60	s
CPP	OF4	**16833**			3	RW	**OFF to ON compressor safety time, suction section 4**	0 ... 9999	60	s
CPP	On1	**16834**			3	RW	**ON to ON compressor safety time, suction section 1**	0 ... 9999	60	s
CPP	On2	**16835**			3	RW	**ON to ON compressor safety time, suction section 2**	0 ... 9999	60	s
CPP	On3	**16836**			3	RW	**ON to ON compressor safety time, suction section 3**	0 ... 9999	60	s
CPP	On4	**16837**			3	RW	**ON to ON compressor safety time, suction section 4**	0 ... 9999	60	s
Cr2	tOf	**16840**			3	RW	**Maximum CRII compressor inactivity time before switch-off**	0 ... 120	60	s
Cr2	CrE	**16841**			3	RW	**Number of CRII coils active in case of suction probe error** • **0** = No coil connected; • **1** = See parameter **nS**.	0 / 1	1	flag
Cr2	tAC	**16842**			3	RW	**Time over upper band 1 for further CRII coil activation**	10 ... 9999	10	s
Cr2	tdC	**16843**			3	RW	**Time under lower band 1 for CRII coil disabling**	10 ... 9999	10	s
Cr2	oFC	**16844**			3	RW	**CRII compressor protection time OFF - ON**	0 ... 9999	60	s
Cr2	OnC	**16845**			3	RW	**CRII compressor protection time ON - ON**	0 ... 9999	60	s
Cr2	OnS	**16846**			3	RW	**Minimum time CRII solenoid ON**	5 ... 100	5	s
Cr2	OFS	**16847**			3	RW	**Minimum time CRII solenoid OFF**	5 ... 100	5	s
FAn	SP2	**16444**	Y	-1	3	RW	**pressure setpoint, discharge section**	0 ... 500	170	bar
FAn	FBn	**16445**	Y	-1	3	RW	**Proportional pressure band, discharge section**	0 ... 500	20	bar
FAn	Fdn	**16446**			3	RW	**Fan enabling delay from acknowledgment**	0 ... 600	5	s
FAn	FdF	**16447**			3	RW	**Fan deactivation delay**	0 ... 600	5	s
FAn	OS2	**16448**	Y	-1	3	RW	**Offset on setpoint**	-500 ... 500	0	bar
FAi	Ftr	**16465**			3	RW	**PID controller sampling time**	0 ... 255	10	s/10
FAi	Fti	**16466**			3	RW	**Fans PID controller integral time**	0 ... 9999	0	s
FAi	Ftd	**16467**			3	RW	**Fans PID controller derivative time**	0 ... 9999	0	s
FAi	Ftt	**16468**			3	RW	**PID anti-reset windup integral time**	0 ... 9999	7	s
FAi	FtA	**16469**			3	RW	**PID controller maximum percentage change per second**	0 ... 100	0	%
FAi	FAP	**16470**			3	RW	**Select PID automatic or manual mode**	0/1	1	flag
FAi	FPE	**16472**	Y	-1	3	RW	**Fans output percentage in case of probe error**	0 ... 1000	1000	%
FAi	FLP	**16473**	Y	-1	3	RW	**Fans output minimum percentage**	0 ... 1000	0	%
FAF	EdC	**16454**			3	RW	**Selection of dynamic condensation setpoint**	0/1	0	flag
FAF	dtC	**16455**	Y	-1	3	RW	**Dynamic condensation setpoint temperature offset**	0 ... 200	100	°C
FAF	CSH	**16456**	Y	-1	3	RW	**Floating condensation setpoint maximum value**	50 ... 300	170	bar
FAF	CSL	**16457**	Y	-1	3	RW	**Floating condensation setpoint minimum value**	50 ... 300	130	bar
FAF	oAC	**16458**	Y	-1	3	RW	**Condensation setpoint maximum offset**	-500 ... 500	100	°C

FOLDER	LABEL	VIS PAR. ADDRESS	CPL	EXP	VIS PAR. VALUE	R/W	DESCRIPTION	RANGE	DEFAULT	UM
FAF	oSC	**16459**	Y	-1	3	RW	**Condensation setpoint minimum offset**	-500 ... 500	0	°C
FAF	PSb	**16460**	Y	-1	3	RW	**sub-cooling setpoint 1 for dynamic condensation setpoint in discharge**	-500 ... 500	60	°C
FAF	nSb	**16461**	Y	-1	3	RW	**sub-cooling setpoint 2 for dynamic condensation setpoint in discharge**	-500 ... 500	30	°C
FAF	HSb	**16462**	Y	-1	3	RW	**Sub-cooling maximum band**	-500 ... 500	80	°C
FAF	LSb	**16463**	Y	-1	3	RW	**Sub-cooling minimum band**	-500 ... 500	10	°C
FAF	HEt	**16464**	Y	-1	3	RW	**Maximum external temperature for floating condensation**	0 ... 500	280	°C
ALr	dHA	**16849**	Y	-1	3	RW	**High pressure alarm activation threshold in discharge**	0 ... 300	220	bar
ALr	dHd	**16850**	Y	-1	3	RW	**Maximum pressure alarm activation delta in discharge**	1 ... 10	5	bar
ALr	SLA	**16851**	Y	-2	3	RW	**Low pressure alarm activation threshold, suction section**	0 ... 800	50	bar
ALr	SLd	**16852**	Y	-2	3	RW	**Low pressure alarm activation delta, suction section**	1 ... 100	20	bar
ALr	dtA	**16853**	Y	-1	3	RW	**Maximum temperature alarm activation threshold in discharge**	0 ... 1100	1000	°C
ALr	dtd	**16854**	Y	-1	3	RW	**Maximum temperature alarm activation delta in discharge**	1... 500	100	°C
ALr	dtt	**16855**			3	RW	**High temperature and high/low pressure alarms bypass**	0 ... 60	5	min
ALr	OLt	**16856**	Y	-1	3	RW	**Minimum overheating threshold**	-1000 ... 1000	20	°C
ALr	OHt	**16857**	Y	-1	3	RW	**Maximum overheating threshold**	-1000 ... 1000	120	°C
ALr	Odt	**16858**	Y	-1	3	RW	**Overheating differential**	1 ... 500	20	°C
ALr	OAd	**16859**			3	RW	**Overheating alarm delay**	0 ... 60	5	min
rSt	rC1	**16488**			3	RW	**Reset Compressor 1 running time**	Off/On	/	flag
rSt	rC2	**16495**			3	RW	**Reset Compressor 2 running time**	Off/On	/	flag
rSt	rC3	**16502**			3	RW	**Reset Compressor 3 running time**	Off/On	/	flag
rSt	rC4	**16509**			3	RW	**Reset Compressor 4 running time**	Off/On	/	flag
rSt	rF1	**16516**			3	RW	**Reset Fan 1 running time**	Off/On	/	flag
rSt	rF2	**16523**			3	RW	**Reset Fan 2 running time**	Off/On	/	flag
rSt	rS1	**16438**			3	RW	**Reset cr2 coil 1 running time**	Off/On	/	flag
rSt	rS2	**16439**			3	RW	**Reset cr2 coil 2 running time**	Off/On	/	flag
rSt	rS3	**16440**			3	RW	**Reset cr2 coil 3 running time**	Off/On	/	flag

10.1.4. Client Table

LABEL	R/W	CPL	RANGE	ADDRESS	DESCRIPTION	UM
AI1	R	Y	-3200.0 ... 3200.0	9020	Suction probe	°C
AI2	R	Y	-320 ... 320	8961	Suction probe	bar
AI3	R	Y	-3200.0 ... 3200.0	9217		°C
AI4	R	Y	-3200 ... 3200	8962		bar
AI5	R	Y	-3200.0 ... 3200.0	8963	External ambient probe	°C
AI6	R	Y	-3200.0 ... 3200.0	9024	Discharge temperature probe	°C
Tsat	R	Y	-3200.0 ... 3200.0	8985	Suction temperature probe	°C
Tliq	R	Y	-3200.0 ... 3200.0	8964	Liquid return temperature probe	°C
Tval	R	Y	-3200.0 ... 3200.0	8986	Valve overheating temperature	°C
SetA	R	Y	-320 ... 320	9018	suction setpoint	bar
SetM	R	Y	-3200 ... 3200	9017	discharge setpoint	bar
Step1	R	N	0 ... 1	8973	CRII Compressor	flag
Step2	R	N	0 ... 1	8994	CRII compressor valve 1	flag
Step3	R	N	0 ... 1	8995	CRII compressor valve 2	flag
Step4	R	N	0 ... 1	8996	CRII compressor valve 3	flag
StC1	R	N	0 ... 1	8975	Compressor 1	flag
StC2	R	N	0 ... 1	8976	Compressor 2	flag
StC3	R	N	0 ... 1	8977	Compressor 3	flag
StC4	R	N	0 ... 1	8978	Compressor 4	flag
StF1	R	N	0 ... 1	8979	Fans 1	flag
StF2	R	N	0 ... 1	8980	Fans 2	flag
StFi	R	N	0 ... 1	8981	Fan driven by inverter, discharge section	flag
Pfi	R	N	0 ... 100	9016	Power generated by fans driven by inverter in the discharge section	%
Eco	R	N	0 ... 1	16454	Economy, discharge section	flag
OnOff	R	N	0 ... 1	8984	Device status	flag
Alrm	R	N	0 ... 1	8974	Alarm	flag
Er01	R	N	0 ... 1	9299	Suction pressure input failure	flag
Er02	R	N	0 ... 1	9300	Discharge probe error	flag
Er03	R	N	0 ... 1	9301	External temperature probe error	flag
Er04	R	N	0 ... 1	9302	Liquid return temperature probe error	flag
Er05	R	N	0 ... 1	9303	Discharge temperature probe error	flag
Er06	R	N	0 ... 1	9304	CRII compressor thermal protection alarm	flag
Er07	R	N	0 ... 1	9305	CRII compressor high temperature lock alarm	flag
Er08	R	N	0 ... 1	9306	High pressure switch	flag
Er09	R	N	0 ... 1	9307	Low pressure switch	flag
Er10	R	N	0 ... 1	9308	Compressor 1 thermal switch alarm	flag

LABEL	R/W	CPL	RANGE	ADDRESS	DESCRIPTION	UM
Er11	R	N	0 ... 1	9309	Compressor 2 thermal switch alarm	flag
Er12	R	N	0 ... 1	9310	Compressor 3 thermal switch alarm	flag
Er13	R	N	0 ... 1	9311	Compressor 4 thermal switch alarm	flag
Er14	R	N	0 ... 1	9312	Fan thermal switch	flag
Er15	R	N	0 ... 1	9313	Suction section low pressure	flag
Er16	R	N	0 ... 1	9314	High condensation pressure	flag
Er17	R	N	0 ... 1	9315	Suction temperature input failure	flag
Er18	R	N	0 ... 1	9316	Low overheating alarm	flag
Er19	R	N	0 ... 1	9317	High overheating alarm	flag
nSB	W	N	0 ... 1	16408	Device on	flag
oSB	W	N	0 ... 1	16408	Device off	flag
rC1	W	N	0 ... 1	16488	Reset compressor 1 running time	flag
rC2	W	N	0 ... 1	16495	Reset compressor 2 running time	flag
rC3	W	N	0 ... 1	16502	Reset compressor 3 running time	flag
rC4	W	N	0 ... 1	16509	Reset compressor 4 running time	flag
rS1	W	N	0 ... 1	16438	Reset CRII compressor coil 1 running time	flag
rS2	W	N	0 ... 1	16439	Reset CRII compressor coil 2 running time	flag
rS3	W	N	0 ... 1	16440	Reset CRII compressor coil 3 running time	flag
rF1	W	N	0 ... 1	16516	Reset fan 1 running time	flag
rF2	W	N	0 ... 1	16523	Reset fan 2 running time	flag

CHAPTER 11
Alarms

11.1. Alarms table

Label	Description	Reset	Action	Solution
Er01	Suction pressure probe error (see para. **CPE** and **CRE**)	AUTO	1...4 CRII Lock	• Check wiring • Replace probe • Wait for the read temperature value to be restored
Er02	Discharge pressure probe error	AUTO	1...4 CRII Lock 100% ON	• Check wiring • Replace probe • Wait for the read temperature value to be restored
Er03	External temperature probe error	AUTO	Floating condensation Lock	• Check wiring • Replace probe • Wait for the read temperature value to be restored
Er04	Liquid return temperature probe error	AUTO	Sub-cooling lock	• Check wiring • Replace probe • Wait for the read temperature value to be restored
Er05	Discharge temperature probe error	AUTO	CRII Lock	• Check wiring • Replace probe • Wait for the read temperature value to be restored
Er06	CRII compressor thermal switch	AUTO	CRII Lock	Check the relative digital input
Er07	CRII compressor high temperature lock alarm	AUTO + **dta** + **dtt**	CRII Lock	Wait for the discharge temperature to return to within the nominal values
Er08	Maximum pressure switch alarm	AUTO	100% ON	Wait for the discharge pressure to return to within the nominal values.
Er09	Minimum pressure switch alarm	AUTO	1...4 CRII Lock	Wait for the suction pressure to return to within the nominal values.
Er10	Compressor 1 thermal switch alarm	AUTO	1 Lock	Check the relative digital input
Er11	Compressor 2 thermal switch alarm	AUTO	2 Lock	Check the relative digital input
Er12	Compressor 3 thermal switch alarm	AUTO	3 Lock	Check the relative digital input
Er13	Compressor 4 thermal switch alarm	AUTO	4 Lock	Check the relative digital input
Er14	Fans thermal switch alarm	AUTO	1...4 CRII Lock	Check the relative digital input
Er15	Low suction pressure alarm	AUTO + **SLA** + **dtt**	Display only	-
Er16	High condensation pressure alarm	AUTO + **dHA** + **dtt**	Display only	-
Er17	Suction temperature probe error	AUTO	Display only	• Check wiring • Replace probe • Wait for the read temperature value to be restored
Er18	Low overheating alarm	AUTO	Display only	-
Er19	High overheating alarm	AUTO	Display only	-

11.2. Alarm log

When an error or alarm occurs it is stored with the date and time.
The controller stores the last 20 alarms in its memory.
To view the log enter the Set menu, then the folder **Hyst**.
There are 5 memory positions in this folder:

- **HySP** indicates the position in the alarm log;
- **HySC** indicates the alarm code;
- **HySd** indicates the alarm date;
- **HySt** indicates the alarm time.
- **HiSF** indicates the number of alarms stored.

The user chooses the memory position by setting a value from 0 to 19 (**HySP**) and can then view the other variables.
The Alarm/Error codes go from 1 to 19 in the order shown in CHAPTER 11 page 79.
Press and hold UP (F1) on the main screen for a few seconds to reset the alarm log.

CHAPTER 12
Updating the device

12.1. Direct connection with Device Manager

Use the **DMI** to connect the **EWCM 436D PRO** / A-CRII controller to the PC/serial port for quick parameter programming.

DMI connection
To connect the **DMI** to the **EWCM 436D PRO** / A-CRII use the **YELLOW (YW)** cable.

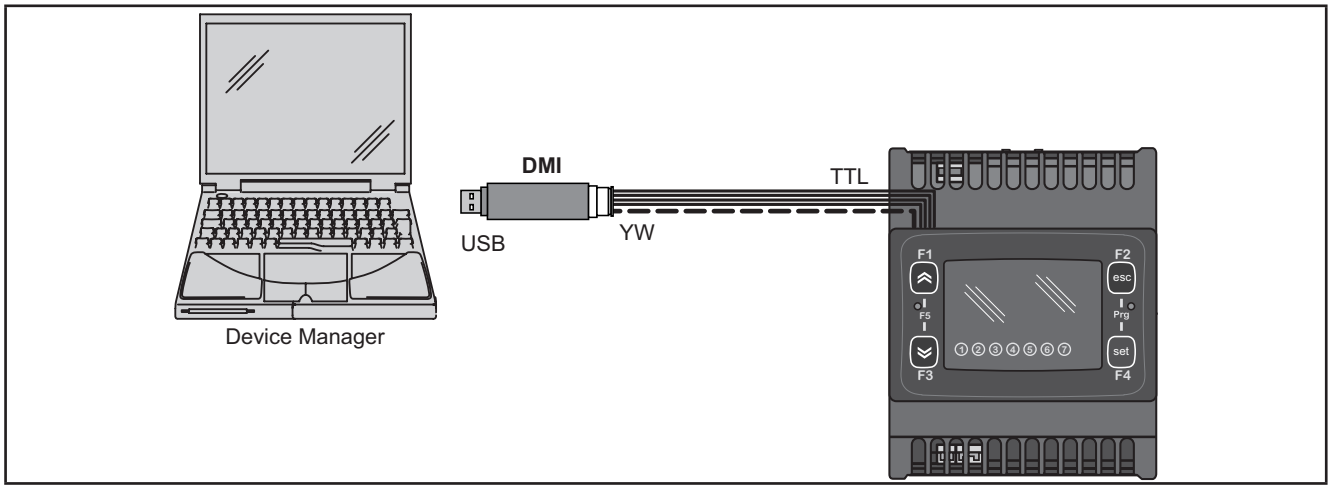

Fig. 38. Connection between **DMI / UNICARD** and **EWCM 436D PRO**

NOTE: in this mode, **EWCM 436D PRO** / A-CRII must not be connected to ground. When connecting to ground for both the PC and the **EWCM 436D PRO** / A-CRII there could be a ring ground condition that makes both the PC and the **EWCM 436D PRO** unusable.

NOTICE
INOPERABLE DEVICE Disconnect all ground connections on the device before connecting to a PC. **Failure to follow these instructions can result in equipment damage.**

12.2. Connecting to UNICARD / MFK

To connect the **MFK** to the **DMI** use the **BLUE** cable.

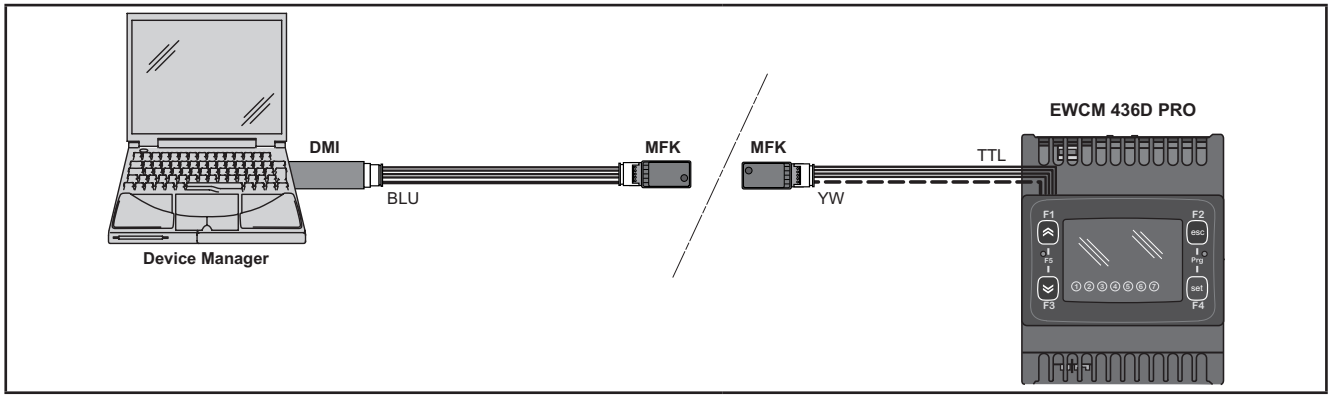

Fig. 39. Connection between the MFK/UNICARD and DMI + Device Manager

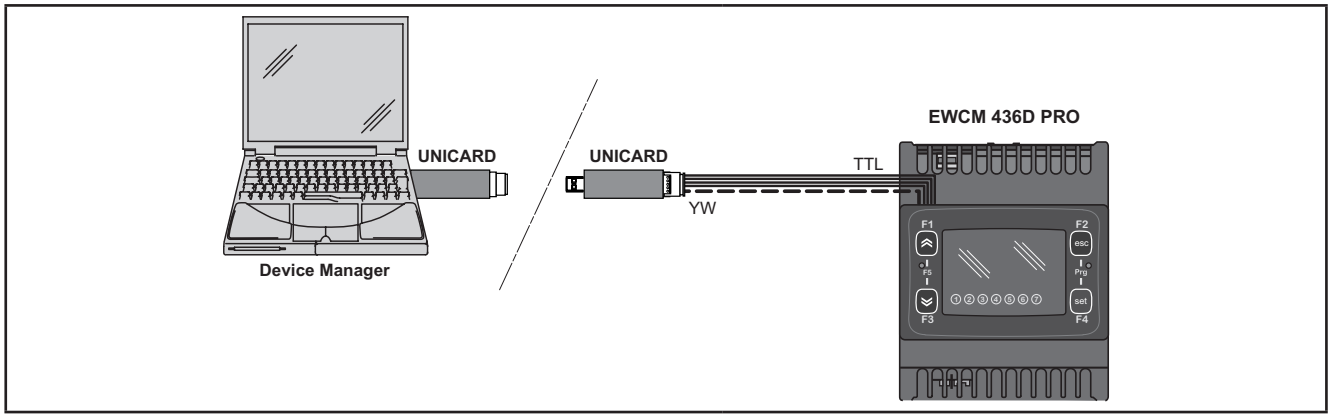

Fig. 40. Connection between UNICARD and Device Manager + **EWCM 436D PRO**

Device Manager → MFK / UNICARD	Device Manager ← MFK / UNICARD
Parameters	Parameters
Fw	-

⚠ WARNING

UNINTENDED EQUIPMENT OPERATION

- Connect the programming cable firstly to the PC and then to the controller programming port.
- Disconnect the programming cable from the controller before disconnecting from the PC.

Failure to follow these instructions can result in death, serious injury, or equipment damage.

12.3. Firmware updating

To update the firmware on the **EWCM 436D PRO** / A-CRII controller, first update the UNICARD key/MFK using **Device Manager**.

When connecting to the **EWCM 436D PRO** / A-CRII controller having switched off the updated key, the firmware download will run automatically when the instrument is switched on. The key LED flashes while the operation is in progress.

When completed, the key LED may be in one of the following statuses:

- ON: If the operation was successful.
- OFF: If the operation was not successful (in this case repeat the procedure or update the key contents).

NOTE: When connecting a key with the same contents as the controller, no firmware will be downloaded and the key LED will stay off.

CHAPTER 13
Monitoring

The serial TTL can be used to configure the device, parameters, statuses, and variables via the Modbus protocol.

13.1. Configuration with Modbus RTU

Modbus is a client/server protocol for communication between devices connected in a network.
Modbus devices communicate using a master-slave technique in which only one device (master) can send messages. The other devices in the network (slave) respond, returning the data requested by the master or executing the action contained in the message received. A slave is a device connected to a network that processes information and sends the results to the master using the Modbus protocol.
The master device can send messages to individual slaves or to the entire network (broadcast) whilst slaves can only respond to individual messages sent by the master.

NOTE: The Modbus standard used by **Eliwell** employs the RTU code for data transmission.

13.1.1. Data format (RTU)

The coding model used defines the structure of messages transmitted on the network and the way in which this information is deciphered. The coding type is usually chosen according to specific parameters (baud rate, parity, etc.)*** and some devices only support certain coding models. However, the model used must be the same as used for all devices connected to a Modbus network.
The protocol used adopts the RTU binary method with bytes configured as follows:
8 bits for data, odd (even) parity bit, 1 stop bit (non-configurable).

***configured with parameters **CF30, CF31.**

Parameter setting allows full configuration of the device.
Changes can be made via:

- the user interface of the instrument.
- the remote display of the instrument.
- **MFK**.
- Sending data via Modbus protocol directly to an individual controller or broadcasting it using the address 0 (broadcast).

Device / Bus Adapter connection	TTL 5-way connector cable (30 cm) (additional lengths/sizes available)
Bus Adapter	BusAdapter 150
Bus Adapter / Interface connection	RS485 cable shielded and twisted (e.g.: Belden cable model 8762)

13.1.2. Modbus commands available and data areas

The following commands are implemented:

Modbus command	Command description
3	Reading more than one log on the Client side
6	Writing only one log on the Client side
16	Writing more than one log on the Client side
43	Read device ID
	DESCRIPTION Manufacturer ID Model ID Version ID

NOTE: For the variables see **10.1.4. Client Table page 76**.

13.2. Device address

The address of a device (Device Number) in a Modbus message is defined in parameter **CF30** (see **10.1.1. BIOS / visibility parameters table page 65**).
The address 0 is used for broadcast messages that all slaves recognize.

NOTE: The slaves do not respond to broadcast messages.

13.2.1. List of parameter addresses

The list of addresses is given in **CHAPTER 10 Parameters (PAR) page 63**, under “Parameters/Visibility Table / ADDRESS column (parameter addresses) and VIS PAR ADDRESS (addresses visibility parameters).

13.2.2. List of variable addresses / states

The list of addresses is given in **CHAPTER 10 Parameters (PAR) page 63**, Client Table section, ADDRESS column.

Eliwell Controls s.r.l.
Via dell'Industria, 15 • Z.I. Paludi
32016 Alpago (BL) ITALY
Tel. +39 0437 166 0000
www.eliwell.com

Customer Technical Support
Tel. +39 0437 986 300
E: techsuppeliwell@se.com

Sales office
Tel. +39 0437 986 100 (Italy)
Tel. +39 0437 986 200 (other countries)
E: saleseliwell@se.com

9MA10273.03 - EWCM 436D PRO / A-CRII - EN - 03/24
© 2024 Eliwell. All rights reserved